Panasonic

PROGRAMMABLE CONTROLLER

FP-X

User's Manual

ARCT1F409E-10

2013.7 | panasonic.net/id/pidsx/global

Ramco National www.PanasonicSensors.com 1-800-280-6933

Safety Precautions

Observe the following notices to ensure personal safety or to prevent accidents.
To ensure that you use this product correctly, read this User's Manual thoroughly before use.
Make sure that you fully understand the product and information on safety.
This manual uses two safety flags to indicate different levels of danger.

WARNING

If critical situations that could lead to user's death or serious injury is assumed by mishandling of the product.

-Always take precautions to ensure the overall safety of your system, so that the whole system remains safe in the event of failure of this product or other external factor.
-Do not use this product in areas with inflammable gas. It could lead to an explosion.
-Exposing this product to excessive heat or open flames could cause damage to the lithium battery or other electronic parts.
-Battery may explode if mistreated. Do not recharge, disassemble or dispose of fire.

CAUTION

If critical situations that could lead to user's injury or only property damage is assumed by mishandling of the product.

-To prevent excessive exothermic heat or smoke generation, use this product at the values less than the maximum of the characteristics and performance that are assured in these specifications.
-Do not dismantle or remodel the product. It could cause excessive exothermic heat or smoke generation.
-Do not touch the terminal while turning on electricity. It could lead to an electric shock.
-Use the external devices to function the emergency stop and interlock circuit.
-Connect the wires or connectors securely.
The loose connection could cause excessive exothermic heat or smoke generation.
-Ground the protective earth (PE) terminal (Class D grounding). Failure to do so could lead to an electric shock.
-Do not allow foreign matters such as liquid, flammable materials, metals to go into the inside of the product. It could cause excessive exothermic heat or smoke generation.
-Do not undertake construction (such as connection and disconnection) while the power supply is on. It could lead to an electric shock.

Copyright / Trademarks

-This manual and its contents are copyrighted.
-You may not copy this manual, in whole or part, without written consent of Panasonic Industrial Devices SUNX Co., Ltd.
-Windows is a registered trademark of Microsoft Corporation in the United States and other countries.
-Ethernet is a registered trademark of Fuji Xerox Co., Ltd. and Xerox Corp.
-All other company names and product names are trademarks or registered trademarks of their respective owners.

PLC_FPX

Table of Contents

Before You Start
Differences in Functions Between Versions of Controller
Restriction on using the Add-on cassette
Programming Tool Restrictions

1. Features, Functions and Restrictions 1-1

1.1 Features and Functions of the Unit 1-2
1.2 Unit Types 1-6
1.3 Restrictions on Unit Combinations 1-10
1.4 Programming Tools 1-14

2. Specifications and Functions of Control Unit 2-1

2.1 Parts and Functions 2-2
2.2 Power Supply Specifications 2-5
2.3 Input Specifications 2-6
2.4 Output Specifications 2-8
2.5 Limitations on Number of Simultaneous Input/Output On Points 2-11
2.6 Terminal Layout 2-20

3. Expansion Cassette and Expansion FP0 Adapter Specifications 3-1

3.1 Expansion Method 3-2
3.2 FP-X Expansion Unit 3-3
3.3 FP-X Expansion FP0 Adapter 3-11

4. I/O Allocation 4-1

4.1 I/O Allocation 4-2
4.2 Allocation of FP-X Control Unit 4-3
4.3 FP0 Expansion Unit Allocation 4-3
4.4 Allocation of FP0 Expansion Unit 4-4
4.5 I/O Allocation of FP-X Add-on Cassette 4-6

5. Installation and Wiring 5-1

5.1 Installation 5-2
5.2 Installation Using Expansion Cable 5-5
5.3 Expansion Method of FP0 Expansion Unit 5-8
5.4 How to Install Add-on Cassette 5-9
5.5 Power Supply 5-11
5.6 Wiring of Input and Output 5-17
5.7 Wiring of Terminal Block 5-20
5.8 Wiring of Add-on Cassette Terminal Block 5-22

Ramco National www.PanasonicSensors.com 1-800-280-6933

5.9 Handling of Backup Battery....5-25
5.10 Safety Measures....5-29

6. Tool Port and USB Port....6-1

6.1 Tool Port and USB Port....6-2
6.2 Functions of Tool Port....6-3
6.3 USB Port....6-6

7. Communication Cassette....7-1

7.1 Functions and Types....7-2
7.2 Communication Specifications....7-16
7.3 Communication Function 1: Computer Link....7-20
7.4 Communication Function 2: General-purpose Serial Communication....7-36
7.5 Communication Function 3: PC(PLC) Link....7-56
7.6 Communication Function 4: MODBUS RTU Communication....7-75
7.7 Ethernet Communication (AFPX-COM5)....7-81

8. Application Cassette....8-1

8.1 Expansion of Application Cassette....8-2
8.2 Application Cassettes....8-3
8.3 Specifications....8-5

9. High-speed Counter, Pulse Output and PWM Output Functions (For Tr Type)....9-1

9.1 Overview of Each Functions....9-2
9.3 High-speed Counter Function....9-11
9.4 Pulse Output Function....9-19
9.5 PWM Output Function (Pulse I/O Cassette)....9-51

10. High-speed counter, Pulse Output and PWM Output functions (For Ry Type)....10-1

10.1 Overview of Each Functions....10-2
10.3 High-speed Counter Function....10-9
10.4 Pulse Output Function (Pulse I/O Cassette)....10-20
10.5 PWM Output Function (Pulse I/O Cassette)....10-51

11. Security Functions....11-1

11.1 Type of Security Functions....11-2
11.2 Password Protect Function....11-3
11.3 Upload Protection....11-7
11.4 Setting Function for FP Memory Loader....11-9
11.5 Table of Security Settings/Cancel....11-13

Ramco National www.PanasonicSensors.com 1-800-280-6933

12. Other Functions 12-1

12.1 Transfer Function between Memories 12-2
12.2 Function of Master Memory Cassette 12-3
12.3 P13 (ICWT) Instruction 12-8
12.4 Analog Potentiometer 12-9
12.5 Sampling Trace Function 12-10
12.6 Time Constant Processing 12-13

13. Self-Diagnostic and Troubleshooting 13-1

13.1 Self-Diagnostic function 13-2
13.2 Troubleshooting 13-4

14. Precautions During Programming 14-1

14.1 Use of Duplicated Output 14-2
14.2 Handling BCD Data 14-4
14.3 Handling Index Registers 14-5
14.4 Operation Errors 14-7
14.5 Instruction of Leading Edge Detection Method 14-9
14.6 Precautions for Programming 14-13
14.7 Rewrite Function During RUN 14-14
14.8 Processing During Forced Input and Output 14-19

15. Specifications 15-1

15.1 Table of Specifications 15-2
15.2 Table of I/O Number Allocation 15-13
15.3 Relays, Memory Areas and Constants 15-16

16. Dimensions 16-1

16.1 Dimensions 16-2
16.2 Cable/Adapter Specifications 16-4

17. Appendix 17-1

17.1 System Registers / Special Internal Relays / SpecialData Registers 17-2
17.2 Table of Basic Instructions 17-48
17.3 Table of High-level Instruction 17-56
17.4 Table of Error codes 17-76
17.5 MEWTOCOL-COM Communication Commands 17-89
17.6 Hexadecimal/Binary/BCD 17-90
17.7 ASCII Codes 17-91

Ramco National www.PanasonicSensors.com 1-800-280-6933

Before You Start

Operating environment (Use the unit within the range of the general specifications when installing)
*Ambient temperatures:0 ~ +55℃
*Ambient humidity: 10% to 95% RH (at 25°C, non-condensing)
*Keep the height below 2000m.
*For use in pollution Degree 2 environment.
*Do not use it in the following environments.
- Direct sunlight
- Sudden temperature changes causing condensation.
- Inflammable or corrosive gas.
- Excessive airborne dust, metal particles or saline matter.
- Benzine, paint thinner, alcohol or other organic solvents or strong alkaline solutions such as ammonia or caustic soda.
- Direct vibration, shock or direct drop of water.
- Influence from power transmission lines, high voltage equipment, power cables, power equipment, radio transmitters, or any other equipment that would generate high switching surges. (Min.100mm or less)

Static electricity
-Before touching the unit, always touch a grounded piece of metal in order to discharge static electricity.
-In dry locations, excessive static electricity can cause problems.

Wiring the Power Supply to the Control Unit
- Use a power supply wire that is thicker than 2 mm2 (AWG14), and twist it.
- The unit has sufficient noise immunity against the noise generated on the power line. However, it is recommended to take measures for reducing noise such as using a isolating transformer before supplying the power.
- Allocate an independent wiring for each power supplying line, input/output device and operating device.
- If using a power supply without a protective circuit, power should be supplied through a protective element such as a fuse.
- Be sure to supply power to a control and an expansion units from a single power supply. Turning on/off of the power of all the units must be conducted simultaneously.

Power supply sequence
In order to protect the power supply sequence, make sure to turn off the control unit before the input/output power supply. If the input/output power supply is turned off before the control unit, or if the control unit is not shut off momentarily, the controller detects change of input level, and might conduct an unexpected operation.

Before turning on the power
When turning on the power for the first time, be sure to take the precautions given below.
- When performing installation, check to make sure that there are no scraps of wiring, particularly conductive fragments, adhering to the unit.
- Verify that the power supply wiring, I/O wiring, and power supply voltage are all correct.
- Sufficiently tighten the installation screws and terminal screws.
- Set the mode selector to PROG. Mode.

Ramco National www.PanasonicSensors.com 1-800-280-6933

Before entering a program

Be sure to perform a program clear operation before entering a program.

Operation procedure when using FPWIN GR Ver.2

Select “Online Edit Mode” on the FPWIN GR “On line” menu.
Select “Clear Program” on the “Edit” menu.
When the confirmation dialog box is displayed, click on “Yes” to clear the program.

Request concerning program storage

To prevent the accidental loss of programs, the user should consider the following measures.

- Drafting of documents
  To avoid accidentally losing programs, destroying files, or overwriting the contents of a file, documents should be printed out and then saved.
- Specifying the password carefully
  The password setting is designed to avoid programs being accidentally overwritten. If the password is forgotten, however, it will be impossible to overwrite the program even if you want to. Also, if a password is forcibly bypassed, the program is deleted. When specifying the password, note it in the specifications manual or in another safe location in case it is forgotten at some point.
- Upload protection
  When the upload protection setting is specified, programs will be disabled to be read out. If the setting is cancelled forcibly, all programs and system registers will be deleted. Therefore, note that programs and system registers should be managed on your own responsibility.

Backup battery

Do not install the battery when it is not used.
There is a possibility of leak if the battery remains discharged.

Ramco National www.PanasonicSensors.com 1-800-280-6933

Differences in Functions Between Versions of Controller

Version	Usable model		Usable functions
V1.10	Ry type	-	UP/DOWN switching of high-speed counter by SYS instruction Real number basic compare instructions 18 types STF=S1, S2 ANF=S1, S2 ORF=S1, S2 STF<>S1, S2 ANF<>S1, S2 ORF<>S1, S2 STF>S1, S2 ANF>S1, S2 ORF>S1, S2 STF>=S1, S2 ANF>=S1, S2 ORF>=S1, S2 STF<S1, S2 ANF<S1, S2 ORF<S1, S2 STF<=S1, S2 ANF<=S1, S2 ORF<=S1, S2 System register 36 for setting expansion unit recognition time
V1.20	Ry type	-	MEWTOCOL master function F145(SEND) Data send F146(RECV) Data receive E356(EZPID) Easy PID instruction
V2.00	Ry type	Tr type	Time constant processing of input (Refer to Chapter 12.6.) CPU input: System register setting Other input: F182(FILTR) Time constant processing Sampling trace function (Refer to Chapter 12.5.) Sampling by instructions F155(SMPL) Sampling F156(STRG) Sampling trigger Sampling by specifying time Leading contact, trailing contact instructions ST↑ AN↑ OR↑ ST↓ AN↓ OR↓ An arbitrary device can be specified for the setting value of Timer/counter instruction. e.g.) TML 0, DT0 Other additional convenient instructions F252(ACHK) ASCII data check F284(RAMP) Inclination output Baud rate setting (300, 600, 1200 bps) by SYS instruction High-speed operation F0(MV) and F1(DMV) instructions Execution time: Approx. 1us Only when every operands are without index modifier. Function addition to existing instructions F70(BCC) Block check code calculation F356(EZPID) Easy PID instruction

Note) The Ry and Tr types with the same specifications have the same version name

Reference: <Programming Manual ARCT1F313E>

Ramco National www.PanasonicSensors.com 1-800-280-6933

Restriction on using the Add-on cassette

Application cassettes that the version of the FP-X control unit is specified

FP-X Application cassette		Version of control unit
FP-X Analog output cassette	AFPX-DA2	Ver. 2.40 or later
FP-X Analog I/O cassette	AFPX-A21	
FP-X Thermocouple cassette	AFPX-TC2	
FP-X RTD cassette	AFPX-RTD2	

Application cassettes that have restrictions when more than one units are used simultaneously
Current output range

FP-X Application cassette	Quantity used	Control unit		
		C14	C30	C60
AFPX-DA2	1	○	○	○
	2	—	△ Note1)	△ Note1)
AFPX-A21	1	○	○	○
	2	—	○	○
AFPX-DA2 + AFPX-A21	Each 1	—	△ Note1)	△ Note1)
AFPX-DA2 + AFPX-COM5	Each 1	× Note2)	× Note2)	× Note2)
AFPX-A21 + AFPX-COM5	Each 1	× Note2)	× Note2)	× Note2)
AFPX-A21 + AFPX-DA2 + AFPX-COM5	Each 1	—	× Note2)	× Note2)
AFPX-DA2 1unit + AFPX-COM5 1unit		-	× Note2)	× Note2)
AFPX-A21 2units + AFPX-COM5 1unit		-	× Note2)	× Note2)

Note1) Up to 2 channels can be used for the current output range.
(When using two units, it is possible to use the 2-ch current output range and 2-ch voltage output range.)
Note2) The AFPX-DA2 and AFPX-A21 both cannot be used with the AFP-COM5 (Ethernet).

Voltage output range (When using with the output current of 1 mA or below)

FP-X Application cassette	Quantity used	Control unit		
		C14	C30	C60
AFPX-DA2	1	○	○	○
	2	—	○	○
AFPX-A21	1	○	○	○
	2	—	○	○
AFPX-DA2 + AFPX-A21	Each 1	—	○	○
AFPX-DA2 + AFPX-COM5	Each 1	○	○	○
AFPX-A21 + AFPX-COM5	Each 1	○	○	○
AFPX-A21 + AFPX-DA2 + AFPX-COM5	Each 1	—	○	○
AFPX-DA2 1unit + AFPX-COM5 1unit		—	○	○
AFPX-A21 2units + AFPX-COM5 1unit		—	○	○

Note) In the voltage output range, when using them with the output current at 1 mA to 10 mA, the condition is the same as the current output range.

Ramco National www.PanasonicSensors.com 1-800-280-6933

Programming Tool Restrictions

Restrictions on usable programming tools depending on the units (as of Feb. 2009)

Type of programming tool		Type of unit	
		AFPX-C14R AFPX-C30R AFPX-C60R	**AFPX-C14T, C14TD, C14P, C14PD AFPX-C30T, C30TD, C30P, C30PD AFPX-C60T, C60TD, C60P, C60PD**
Windows software	FPWIN GR Ver.2	Used (Ver. 2.5 or later)	Used (Ver. 2.70 or later)
	FPWIN GR Ver.1	Not used	Not used
Windows software Conforms to IEC61131-3	FPWIN Pro Ver.6	Used	Used
	FPWIN Pro Ver.5	Used (Ver. 5.1 or later)	Used (Ver. 5.22 or later)
Handy programming unit	AFP1113V2 AFP1114V2	Not used	Not used
	AFP1113 AFP1114	Not used	Not used
	AFP1111A AFP1112A AFP1111 AFP1112	Not used	Not used
FP memory loader	AFP8670 AFP8671	Used (Only programs and system registers can be transmitted.)	

Note: Precautions concerning version upgrade

- In case of using FPWIN GR Ver.1, please purchase upgrade model FPWIN GR Ver.2.
- FPWIN GR Ver. 2.0 can be upgraded to Ver. 2.5 or later free of charge at our web site.
- FPWIN Pro Ver. 6.0 can be upgraded free of charge at our web site.
- The handy programming unit cannot be used.
  Do not download any programs for other units such as FP1 to the FP-X using the handy programming unit.

Panasonic Electric Works website address:
http://industrial.panasonic.com/ac/e/dl_center/software/

Ramco National www.PanasonicSensors.com 1-800-280-6933

x

Chapter 1

Features, Functions and Restrictions

1.1 Features and Functions of the Unit

Features

- **Compact size general-purpose PLC that is suitable for the small-scale facility control.**
- **Can be directly connected to a personal computer using USB communication port.**
- **High dimensional security functions to deal with copying programs.**
- **Supports analog control.**
- **Following items are provided as options,**
  - **Application cassettes, such as the positioning control function by the high-speed counter and pulse output.**
  - **Fulfilling communication cassettes.**
  - **Realtime clock function.**

Basic functions as compact size general-purpose PLC suitable for the small-scale facility control

Basic functions including the followings are equipped even though it is a general-purpose style such as AC power supply, screw terminal block and relay output.

1. 32k-step program capacity
2. 0.32 μs command processing speed
3. Max. 382-points I/O control

Single-phase 8-channel and 2-phase 4 channel high-speed counter functions are equipped for the control unit.

Fulfilling function enhancement

Various add-on cassettes are available as options (such as 10 types of application cassettes and 6 types of communication cassette).

- **Application cassettes**

DC 8-point input type, transistor 8-point NPN output type, transistor 6-point PNP output type, DC 4-point input + transistor 3-point NPN output type, analog 2-ch output type, analog 2-ch input + analog 1-ch output type, thermocouple 2-ch type, RTD 2-ch type, analog 2-ch input type, high-speed counter input + pulse output type, master memory type with realtime clock (32k-step program can be copied and stored.)

- **Communication cassettes**

1-ch RS232C type, 2-ch RS232C type, 1-ch RS485/RS422 changeover type, 1-ch RS232C + 1-ch RS485 type, Ethernet + 1-ch RS232C type, 2-ch RS485 type

FP0 expansion units can be connected as well as the exclusive expansion unit.

A maximum of 3 FP0 expansion units can be connected using the expansion FP0 adapter.

A personal computer can be directly connected with the USB communication port.

A personal computer can be directly connected with the USB cable (excluding C14).
The USB⇔RS232C conversion adapter/cable is not necessary.
(A tool port (RS232C) is also equipped.)

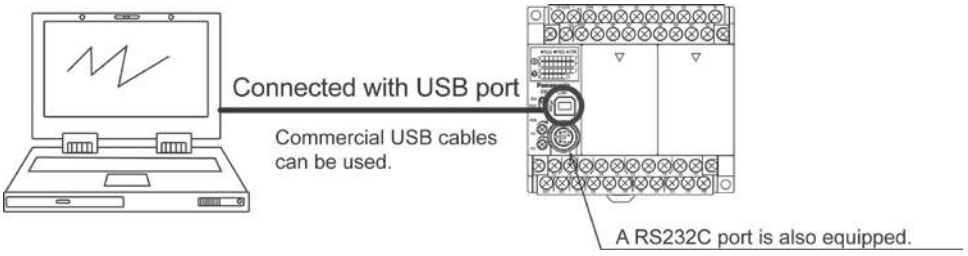

Ramco National www.PanasonicSensors.com 1-800-280-6933

High dimensional security functions to deal with copying programs.

The uploading disabling function prohibits uploading (reading) programs in the PLC main unit and prevent illegal copying.

(It also enables to transfer the programs to the FP-X master memory cassette, when the uploading disabling function is specified).

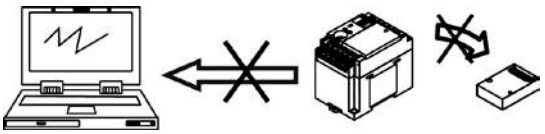

The protection for programs can be selected from 3 security methods.

- 4-digit password
- 8-digit password
- Uploading disabling

A full range of communication functions

Using the Tool port (RS232C) provided as a standard feature on the main unit, communication can be carried out with a display panel or computer. Additionally, communication cassettes with RS232C, RS485 and Ethernet interfaces are available as an option. Installing a 2-channel RS232C type communication cassette in the FP-X makes it possible to connect two devices with RS232C port. A full lineup of communication functions means you can also work with 1:N communication (up to 99 units) and PC(PLC) link function (up to 16 units).

Controlling two devices with RS232C port with one FP-X

When using the 2-channel RS232C type communication cassette

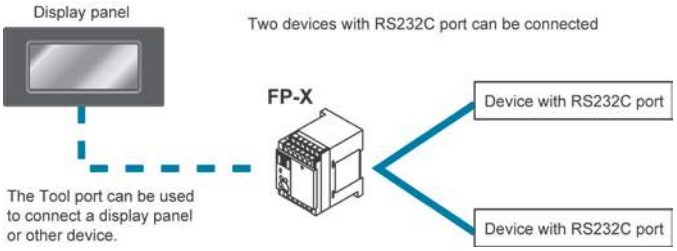

1:N communication possible with up to 99 stations (units)

When using the 1-channel RS485/RS422 type communication cassette

When using the 1-channel RS485 and 1-channel RS232C in combination

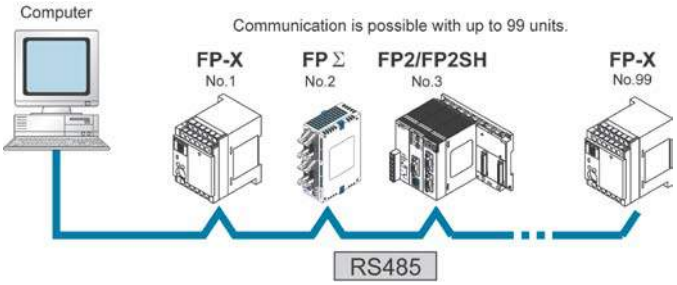

Link with FP2 and FPΣ is possible

Data sharing between small size and medium size PLCs is easily achievable in one network.

The FP-X supports MEWNET-W0, and the programless PLC link with the FP2 or FPΣ is possible.

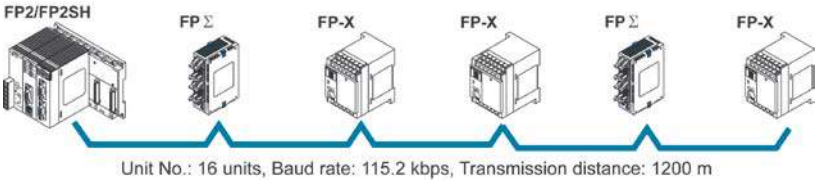

Ramco National www.PanasonicSensors.com 1-800-280-6933

Supports Modbus RTU

It can be used as a master unit/slave units (F145 and F146 instructions).
It can be easily communicated with a temperature control device, inverter, FP-e or overseas PLCs.
It is possible to communicate with up to 99 units

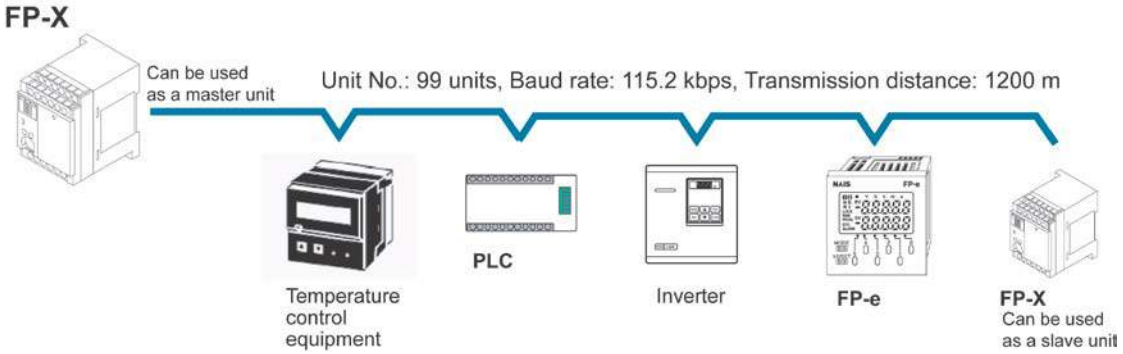

MEWTOCOL communication

It can be used as a master unit/slave units (F145 and F146 instructions).
It can be easily communicated with a PLC, image processor, temperature control device, message runner or eco-power meter.
It is possible to communicate with up to 99 units

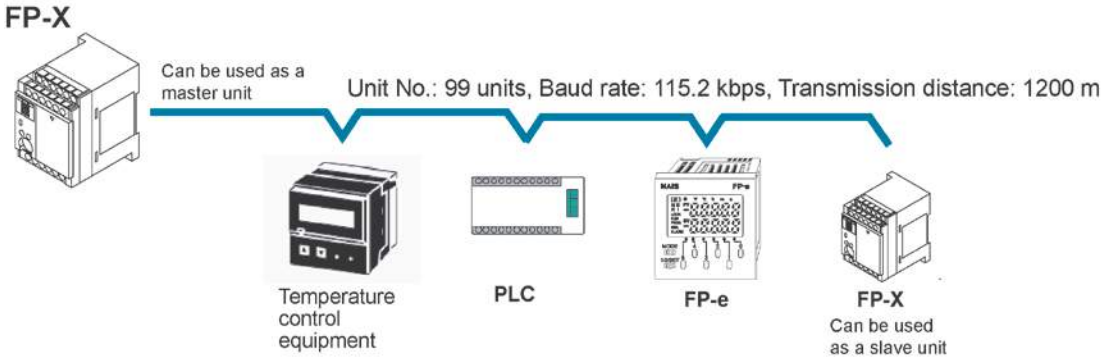

Ramco National www.PanasonicSensors.com 1-800-280-6933

Positioning control supported through high-speed counter and pulse output

With the FP-X Tr type, a high-speed counter function can be used by using the CPU I/O.
With the FP-X Ry type, a high-speed counter and pulse output functions can be used by using the pulse I/O cassette. The pulse output function supports frequencies of up to 100kHz, enabling positioning control using a stepping motor or servo motor.
Note) The pulse I/O cassette cannot be used for the FP-X Tr type.

Measurement using high-speed counter supported

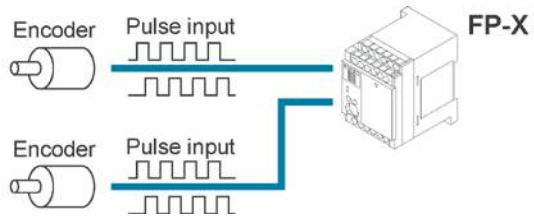

Increment input mode, decrement input mode, 2-phase input mode, individual input mode, and direction discrimination mode are supported.
Note) Differs depending on combinations.

Positioning control based on pulse output supported

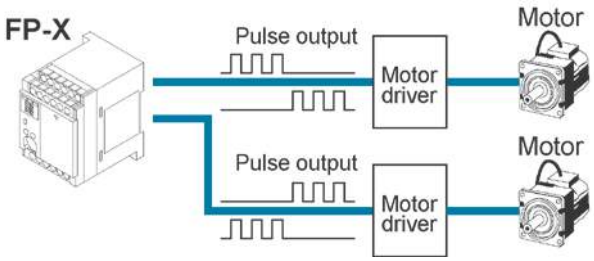

Pulse/direction and clockwise/counter –clockwise output are supported.

Heater control based on PWM output function supported

The pulse output at any duty ratio can be picked up with special instruction.

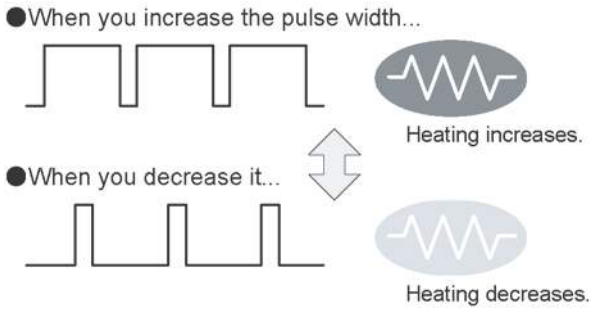

Analog potentiometer (volume dial)

An analog potentiometer (volume dial) is provided as a standard feature. This can be used in applications such as analog timers, without using the programming tools.

Realtime clock function can be added

Optional FP-X master memory cassette (AFPX-MRTC) and backup battery enables the realtime clock function.

Ramco National www.PanasonicSensors.com 1-800-280-6933

1.2 Unit Types

1.2.1 FP-X Control Units

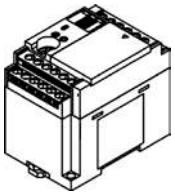

C14

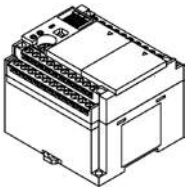

C30

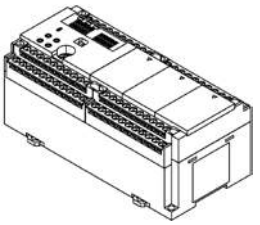

C60

Product No.	No. of I/O points	Specifications			
		Power supply	Input	Output	Connection
Relay type (Ry type)					
AFPX-C14R	8/6	100 to 240 V AC	24 V DC (Common polarities + & - common)	Relay	Terminal block
AFPX-C30R	16/14				
AFPX-C60R	32/28				
AFPX-C14RD	8/6	24 V DC			
AFPX-C30RD	16/14				
AFPX-C60RD	32/28				
Transistor type (NPN) (Tr type)					
AFPX-C14T	8/6	100 to 240 V AC	24 V DC (Common polarities + & - common)	Transistor (NPN)	Terminal block
AFPX-C30T	16/14				
AFPX-C60T	32/28				
AFPX-C14TD	8/6	24V DC			
AFPX-C30TD	16/14				
AFPX-C60TD	32/28				
Transistor type (PNP) (Tr type)					
AFPX-C14P	8/6	100 to 240 V AC	24 V DC (Common polarities + & - common)	Transistor (PNP)	Terminal block
AFPX-C30P	16/14				
AFPX-C60P	32/28				
AFPX-C14PD	8/6	24V DC			
AFPX-C30PD	16/14				
AFPX-C60PD	32/28				

Ramco National www.PanasonicSensors.com 1-800-280-6933

1.2.2 FP-X Expansion Unit

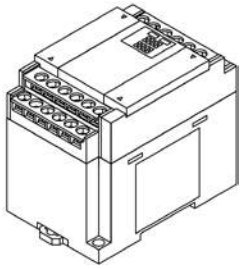

E14/E16

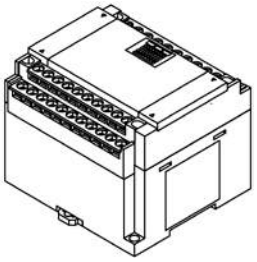

E30

Product No.	No. of I/O points	Specifications			
		Power supply	Input	Output	Connection
Relay type (Ry type)					
AFPX-E16R	8/8	-	24 V DC (Common polarities + & - common)	Relay	Terminal block
AFPX-E30R	16/14	100 to 240 V AC			
AFPX-E30RD	16/14	24 V DC			
Transistor type (NPN) (Tr type)					
AFPX-E16T	8/8	-	24 V DC (Common polarities + & - common)	Transistor (NPN)	Terminal block
AFPX-E30T	16/14	100 to 240 V AC			
AFPX-E30TD		24V DC			
Transistor type (PNP) (Tr type)					
AFPX-E16P	8/8	-	24 V DC (Common polarities + & - common)	Transistor (PNP)	Terminal block
AFPX-E30P	16/14	100 to 240 V AC			
AFPX-E30PD		24V DC			
Input-only type					
AFPX-E16X	16/0 (X300 to X30F)	-	24 V DC (Common polarities + & - common)	-	Terminal block
- The input specifications are the same as AFPX-E16R.					
Output-only type (Relay type)					
AFPX-E14YR	0/14 (Y300 to Y30D)	-	-	Relay	Terminal block
- The output specifications are the same as AFPX-E16R.					

An 8-cm expansion cable is provided with expansion unit

1.2.3 FP-X Expansion FP0 Adapter

	Name	Specifications	Product No.
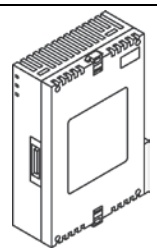	FP-X Expansion FP0 adapter (with 8 cm expansion cable, power supply cable)	For connecting FP0 expansion unit	AFPX-EFP0

Ramco National www.PanasonicSensors.com 1-800-280-6933

1.2.4 Add-on Cassettes (Communication cassettes/Application cassettes)

	Name	Specifications	Product No.
Communication cassette 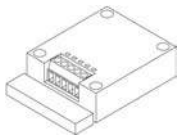	FP-X Communication cassette	5-wire 1-channel RS232C	AFPX-COM1
	FP-X Communication cassette	3-wire 2-channel RS232C	AFPX-COM2
	FP-X Communication cassette	1-channel RS485/RS422 (insulated)	AFPX-COM3
	FP-X Communication cassette	1-channel RS485 (insulated) 3-wire 1-channel RS232C	AFPX-COM4
	FP-X Communication cassette	2-channel RS485 (insulated) (non-insulated between channels)	AFPX-COM6
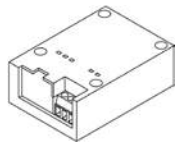	FP-X Communication cassette	Ethernet, 3-wire 1-channel RS232C	AFPX-COM5
Application cassette 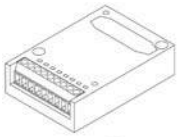 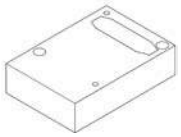	FP-X Analog input cassette	2-channel analog input (non-insulated)	AFPX-AD2
	FP-X Analog output cassette	2-channel analog output (insulated) (insulated between channels)	AFPX-DA2
	FP-X Analog I/O cassette	2-channel analog input (insulated) + 1-channel analog output (insulated)	AFPX-A21
	FP-X Thermocouple cassette	2-channel thermocouple input (insulated) (insulated between channels)	AFPX-TC2
	FP-X RTD cassette	2-ch RTD input (insulated) (insulated between channels)	AFPX-RTD2
	FP-X Input cassette	8-point DC input	AFPX-IN8
	FP-X Output cassette	8-point transistor output (NPN)	AFPX-TR8
		6-point transistor output (PNP)	AFPX-TR6P
	FP-X I/O cassette	4-point DC input + 3-point transistor output (NPN)	AFPX-IN4T3
	FP-X Pulse I/O cassette	2-ch high-speed counter + 1-ch pulse output	AFPX-PLS
	FP-X Master memory cassette	Master memory + realtime clock	AFPX-MRTC

Ramco National www.PanasonicSensors.com 1-800-280-6933

1.2.5 Related Parts

	Name	Description	Product No.
	FP-X Backup battery	Necessary for the backup of data registers, etc. or for using the realtime clock function.	AFPX-BATT
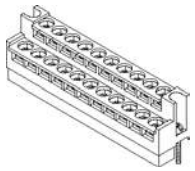	FP-X terminal block (C30/C60)	For C30/C60 control unit for E30 expansion I/O unit with 21-pin cover (no printing) 4 pcs/pack	AFPX-TAN1
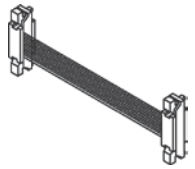	FP-X expansion cable Note)	8 cm	AFPX-EC08
		30 cm	AFPX-EC30
		80 cm	AFPX-EC80
	FP0 power supply cable	For Expansion FP0 adapter, Length: 1 m	AFP0581
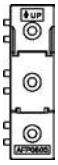	FP0 mounting plate (slim type)	Used for expansion FP0 adapter and FP0 Expansion unit, 10 pcs/pack	AFP0803

Note) The total length of the expansion cable should be within 160 cm.

Ramco National www.PanasonicSensors.com 1-800-280-6933

1.3 Restrictions on Unit Combinations

1.3.1 Restrictions on FP-X Expansion Unit

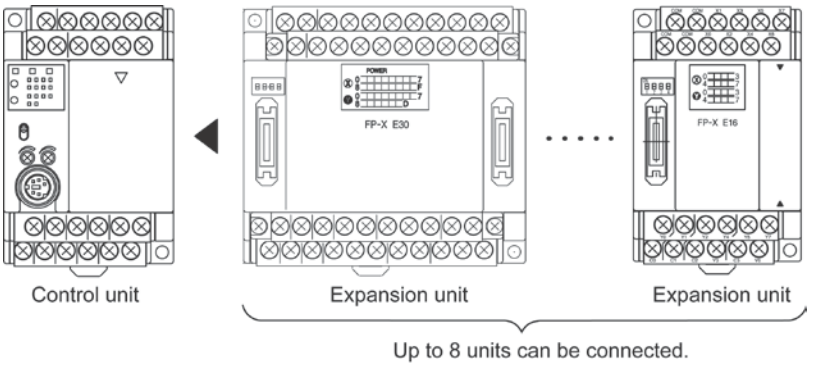

Controllable I/O points

Type of control unit	Number of I/O points when using control unit	Number of I/O points when using 8 units of E30 expansion I/O unit
FP-X C14 Control unit	14 points	Max. 254 points
FP-X C30 Control unit	30 points	Max. 270 points
FP-X C60 Control unit	60 points	Max. 300 points

Note:

- Up to eight units of FP-X can be connected, however, the restrictions on each expansion unit vary.
- For AFPX-E16/E14: Two units cannot be connected consecutively since the power should be supplied from the unit with the power supply (as no power supply is built in AFPX-E16).
  E16 expansion I/O unit cannot be connected on the right side of the control unit or AFPX-E30.
- For AFPX-E30: There is no restriction on AFPX-E30 so that up to 8 units can be connected consecutively.
- The total length of the expansion cable should be within 160 cm.

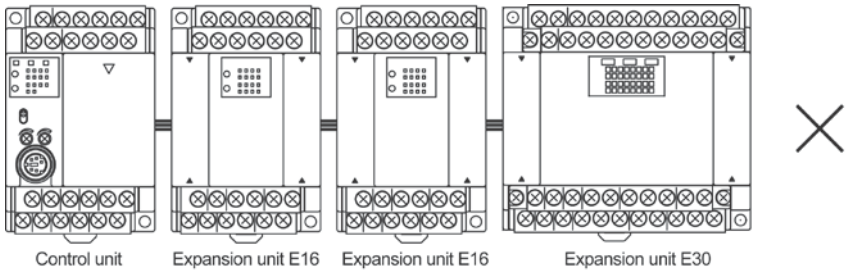

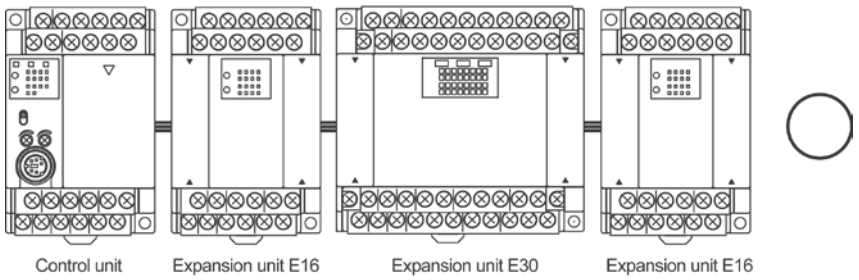

Ramco National www.PanasonicSensors.com 1-800-280-6933

1.3.2 Restrictions on FP0 Expansion Unit

Up to three dedicated FP0 expansion units can be added using the FP-X and the expansion FP0 adapter. The relay output type and the transistor output type can be used in combination.

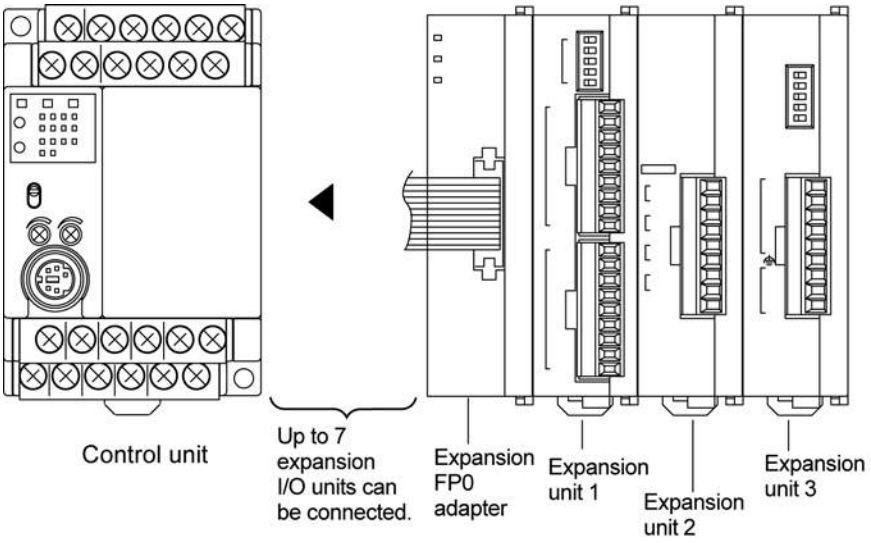

Controllable I/O points

Type of control unit	Number of I/O points when using control unit	Number of I/O points when using FP0 expansion unit
FP-X C14 Control unit	14 points	Max. 110 points
FP-X C30 Control unit	30 points	Max. 126 points
FP-X C60 Control unit	60 points	Max. 156 points

Note1) Up to seven FP-X expansion I/O units can be also installed between the control unit and the expansion FP0 adapter.

Note2) Only one expansion FP0 adapter can be installed at the last position of the FP-X expansion bus. (It should be installed at the right hand side of the AFPX-E16 and E30.)

Note:

- Install the FP0 thermocouple unit on the right side of other expansion units. If it is installed on the left side, the total precision will deteriorate.
- Install the FP0 CC-Link slave unit on the right side of the other expansion units. There is no expansion connector on the right side.

Ramco National www.PanasonicSensors.com 1-800-280-6933

1.3.3 Restrictions on FP-X Add-on Cassette

The add-on cassette is installed in the cassette mounting part 1 and 2 (only the cassette mounting part 1 is available for C14) of the control unit.

The state when 1 application cassette is installed

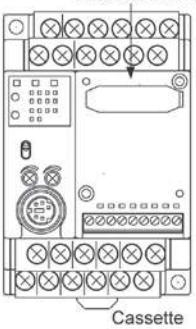

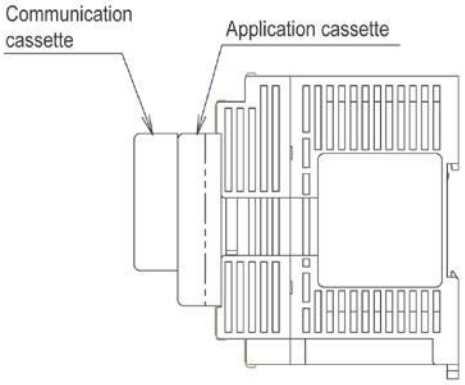

The state when the communication cassettei is installed on the application cassette

The state when 1 application cassette and 1 communication cassette is installed

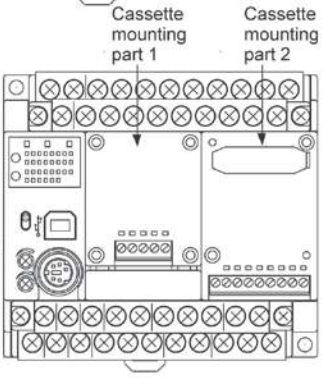

The state when 2 application cassette and 1 communication cassette is installed

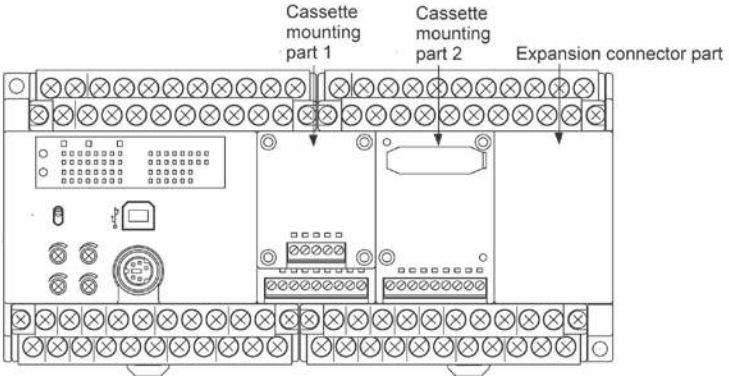

Ramco National www.PanasonicSensors.com 1-800-280-6933

A: Available, N/A: Not available

Restrictions on control unit			FP-X C14 FP-X C30 FP-X C60	FP-X C30 FP-X C60	FP-X C60
Type of add-on cassette			Cassette mounting part 1	Cassette mounting part 2	Expansion connector part
Commu-nication cassette	FP-X Communication cassette	AFPX-COM1	A	N/A	The add-on cassette cannot be installed.
	FP-X Communication cassette	AFPX-COM2	A	N/A	
	FP-X Communication cassette	AFPX-COM3	A	N/A	
	FP-X Communication cassette	AFPX-COM4	A	N/A	
	FP-X Communication cassette	AFPX-COM5	A	N/A	
	FP-X Communication cassette	AFPX-COM6	A	N/A	
Appli-cation cassette	FP-X Analog input cassette	AFPX-AD2	A	A	
	FP-X Input cassette	AFPX-IN8	A	A	
	FP-X Analog output cassette	AFPX-DA2	A	A	
	FP-X Analog I/O cassette	AFPX-A21	A	A	
	FP-X Thermocouple cassette	AFPX-TC2	A	A	
	FP-X RTD cassette	AFPX-RTD2	A	A	
	FP-X Output cassette	AFPX-TR8	A	A	
	FP-X Output cassette	AFPX-TR6P	A	A	
	FP-X I/O cassette	AFPX-IN4T3	A	A	
	FP-X Pulse I/O cassette	AFPX-PLS	A Note5)	A Note5)	
	FP-X Master memory cassette	AFPX-MTRC	A Note1)	A Note1)	

Note:

1. Only one FP-X master memory cassette AFPX-MRTC can be installed. If 2 units are installed, E26 (user ROM error) will occur.
2. One application cassette can be installed in either cassette mounting part 1 or 2 of C30/C60.
3. As only one communication cassette can be installed in the cassette mounting part 1, it should be installed on the application cassette if the application cassette is installed. (It cannot be installed in the cassette mounting part 2.)
4. The add-on cassette cannot be installed in the expansion connector part of C60 (it does not work).
5. The pulse I/O cassette cannot be installed on the FP-X Tr type.

Ramco National www.PanasonicSensors.com 1-800-280-6933

1.4 Programming Tools

1.4.1 Tools Needed for Programming

1. Programming tool software

- The tool software can also be used with the FP series.
- "FPWIN Pro Ver.6" or "FPWIN GR Ver.2" Windows software is used with FP-X.
  FPWIN GR Ver.1x, NPST-GR and FP Programmer cannot be used.

2. PC connection cable

- The dedicated cable is available.
- A commercial USB cable can be used for the connection for C30/C60 control unit.

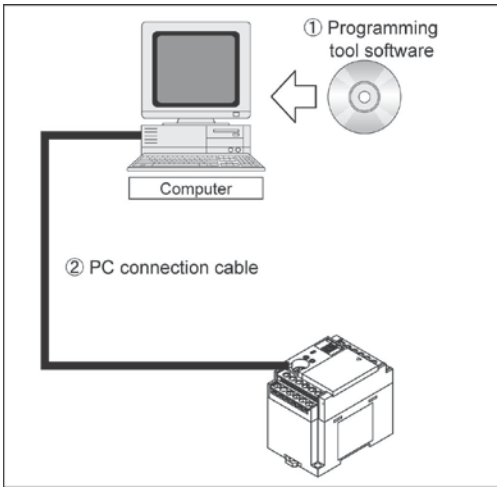

1.4.2 Software Environment and Suitable Cable

Standard ladder diagram tool software FPWIN-GR Ver.2

Type of software		OS (Operating system)	Hard disk capacity	Product No.
FPWIN GR Ver.2 English-language menu	Full type	Windows®98 Windows®Me Windows®2000 Windows®XP Windows Vista® Windows®7	40MB or more	AFPS10520
	Upgrade version			AFPS10520R

Note1) Ver.1.1 must be installed to install the upgrade version.
Note2) Ver.2.0 can be upgraded to the latest version after Ver. 2.1 free of charge at our web site (http://industrial.panasonic.com/ac/e/dl_center/software/). Use the latest version.

Conforms to IEC61131-3 programming tool software FPWIN-Pro Ver.6

Type of software	OS (Operating system)	Hard disk capacity	Product No.
FPWIN Pro Ver.6 English-language menu	Windows®2000 Windows®XP Windows Vista® Windows®7	100MB or more	FPWINPROFEN6

Note1) The small type and upgrade version is not available for Ver.6.
Note2) Ver.6.0 can be upgraded to the latest version after Ver. 6.1 free of charge at our web site ((http://industrial.panasonic.com/ac/e/dl_center/software/). Use the latest version.

Ramco National www.PanasonicSensors.com 1-800-280-6933

Type of computer and suitable cable

For the connection between a personal computer (RS232C) and the control unit (RS232C)

PC side connector	PLC side connector	Specifications	Product No.
D-sub 9-pin	female-Mini DIN round 5-pin	L type (3 m)	AFC8503
	female-Mini DIN round 5-pin	Straight type (3 m)	AFC8503S

Note) Note) A USB/RS232C conversion cable is necessary to connect the unit to the USB port of a personal computer using a PC connection cable.

For the connection between a personal computer (USB) and the control unit (USB)

USB cable (For C30 and C60 only)

Use a commercial cable.

Cable type	Length
USB 2.0 (or 1.1) AB type	Max. 5 m

Ramco National www.PanasonicSensors.com 1-800-280-6933

Chapter 2

Specifications and Functions of Control Unit

2.1 Parts and Functions

2.1.1 Parts and Functions

■FP-X C14 Control unit

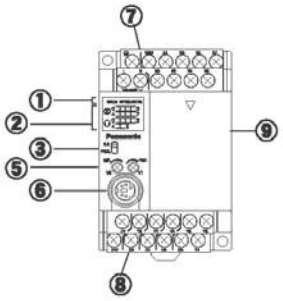

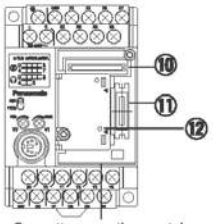

Cassette mounting part 1
State that the expansion cover was removed.

Right side view (common to the control units)

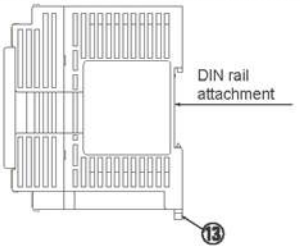

■FP-X C30 Control unit

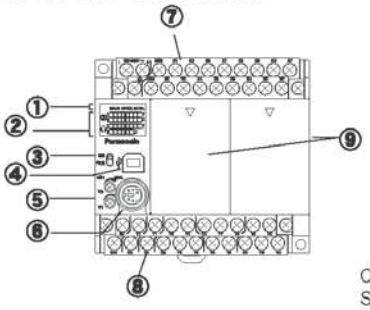

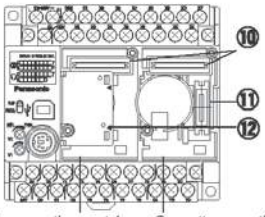

Cassette mounting part 1
State that the expansion cover was removed.

Cassette mounting part 2
State that the expansion cover and battery cover was removed.

■FP-X C60 Control unit

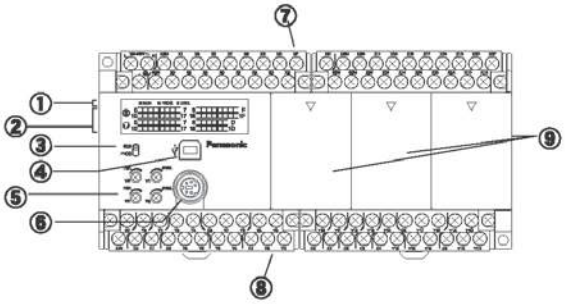

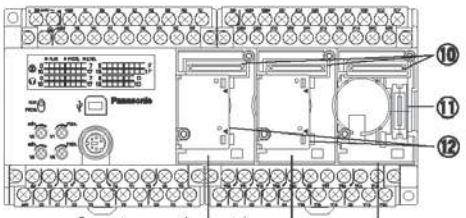

Cassette mounting part 1
State that the expansion cover was removed.

Cassette mounting part 2
State that the expansion cover was removed.

Expansion connector part 2
State that the expansion cover and battery cover

Ramco National www.PanasonicSensors.com 1-800-280-6933

① Status indicator LEDs

These LEDs display the current mode of operation or the occurrence of an error.

	LED		LED and operation status
■RUN	**RUN**	**Green**	Lights when in the RUN mode and indicates that the program is being executed.
			It flashes during forced input/output. (The RUN and PROG. LEDs flash alternately.)
■PROG.	**PROG.**	**Green**	Lights when in the PROG. Mode and indicates that operation has stopped. Lights when in the PROG. Mode during forced input/output.
			It flashes during forced input/output. (The RUN and PROG. LEDs flash alternately.)
■ERR.	**ERROR/ ALARM**	**Red**	Flashes when an error is detected during the self-diagnostic function. (ERROR)
			Lights if a hardware error occurs, or if operation slows because of the program, and the watchdog timer is activated. (ALARM)

② Input/output indicator LEDs

Indicates the on/off status of the input and output.

③ RUN/PROG. mode switch

This switch is used to change the operation mode of the PLC.

Switch position	Operation mode
RUN (upward)	This sets the RUN mode. The program is executed is executed and operation begins.
PROG. (downward)	This sets the PROG. mode. The operation stops.

- The remote switching operation from the programming tool is operable.
- When performing remote switching from the programming tool, the setting of the mode switch and the actual mode of operation may differ. Verify the mode with the status indicator LED.
- Restart FPΣ to operate in the mode set with the RUN/PROG. mode switch.

④ USB connector (B type)

This is a connector to connect the programming tool.
Commercial USB cables (AB type) can be used.

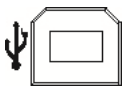

- The baud rate with the USB is 115.2 kbps (fixed).
- Either USB port or COM2 port of 2-channnel type communication cassette is selected.
  The USB port of FP-X and the COM2 port of communication cassette cannot be used at the same time.

⑤ Analog potentiometer (analog dial)

Turning this dial changes the values of special data registers DT90040 to DT90043 within the range of K0 to K1000. It can be used for analog timers and other applications.
C14 and C30 equips 2 points and C60 equips 4 points.

Ramco National www.PanasonicSensors.com 1-800-280-6933

⑥ Tool port (RS232C)

This port is used to connect a programming tool.

A commercial mini-DIN 5-pin connector is used for the Tool port on the control unit.

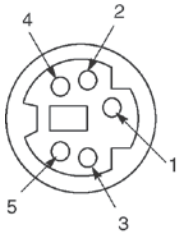

Pin No.	Signal name	Abbreviation	Signal direction
1	Signal Ground	SG	–
2	Send Data	SD	Unit → External device
3	Receive Data	RD	Unit ← External device
4	(Not used)	–	–
5	+5V	+5V	Unit → External device

The followings are the default settings set when the unit is shipped from the factory. The system register "Tool port setting" should be used to change these.

- Baud rate …….. 9600 bps
- Character bit …. 8 bit
- Parity check ….. Odd parity
- Stop bit length .. 1 bit

Note) The unit numbers (station numbers) of the tool port should be specified using the system register "Tool port setting".

⑦ Power supply and input terminal block

This is the power supply and input wiring terminal. A solderless terminal for M3 can be used.

⑧ Service power supply for input and output terminal block

This is the service power supply for input and output wiring terminal. A solderless terminal for M3 can be used.

⑨ Expansion cover

It is used after the expansion cable and the battery has been installed.

⑩ Add-on cassette connector

⑪ Connector For connecting expansion I/O unit and expansion FP0 adapter

An exclusive expansion cable is inserted.

⑫ Battery cover

This battery cover is removed when the optional backup battery is installed.

Installing the backup battery enables the backup of the realtime clock or data registers.

⑬ DIN rail attachment lever

This lever enables the units to attach to a DIN rail at a touch.

Ramco National www.PanasonicSensors.com 1-800-280-6933

2.2 Power Supply Specifications

2.2.1 AC Power Supply

Item	Specifications	
	C14	C30R/C60
Rated voltage	100 to 240 V AC	
Voltage regulation range	85 to 264 V AC	
Inrush current	40 A or less (at 240 V AC, 25 °C)	45 A or less (at 240 V AC, 25 °C)
Momentary power off time	10 ms (when using 100 V AC)	
Frequency	50/60 Hz (47 to 63 Hz)	
Leakage current	0.75 mA or less between input and protective earth terminals	
Internal power supply part Guaranteed life	20,000 hours (at 55 °C)	
Fuse	Built-in (Cannot be replaced)	
Insulation system	Transformer insulation	
Terminal screw	M3	

2.2.2 Service Power Supply for Input (Output) (AC Power Supply Type Only)

Item	Specifications	
	C14	C30/C60
Rated output voltage	24 V DC	
Voltage regulation range	21.6 to 26.4 V DC	
Rated output current	0.15 A	0.4 A
Overcurrent protection function Note)	Available	
Terminal screw	M3	

Note) This is a function to protect overcurernt temporarily, which protects the output short-circuit. If the short-circuit is detected, all the power supply for the PLC will be turned off. If a current load that is out of the specifications is connected and the overloaded status continues, it may lead to damages.

2.2.3 DC Power Supply

Item	Specifications	
	C14	C30/C60
Rated voltage	24 V DC	
Voltage regulation range	20.4 to 28.8 V DC	
Inrush current	12 A or less (at 25 °C)	
Momentary power off time	10 ms	
Internal power supply part Guaranteed life	20,000 h (at 55 °C)	
Fuse	Built-in (Cannot be replaced)	
Insulation system	Transformer insulation	
Terminal screw	M3	

Ramco National www.PanasonicSensors.com 1-800-280-6933

2.3 Input Specifications

2.3.1 Relay (Ry) Type

Input Specifications (For C14R/C30R/C60R control units)

Item		Description
Insulation method		Optical coupler
Rated input voltage		24V DC
Operating voltage range		21.6 to 26.4V DC
Rated input current		Approx. 4.7 mA (for control units X0 to X7) Approx. 4.3 mA (from control unit X8)
Input points per common		8 points/common (C14R) 16 points/common (C30R/C60R) (Either the positive or negative of the input power supply can be connected to common terminal.)
Min. on voltage/Min. on current		19.2 V DC/3 mA
Max. off voltage/Max. off current		2.4V DC/1 mA
Input impedance		Approx. 5.1 kΩ (for control units X0 to X7) Approx. 5.6 kΩ (from control unit X8)
Response time	off→on	**For control units X0 to X7:** 0.6 ms or less: normal input 50 μs or less: high-speed counter, pulse catch, interrupt input settings Note) **From control unit X8 :** 0.6 ms or less
	on→off	Same as above
Operating mode indicator		LED display
EN61131-2 Applicable type		TYPE3 (however, according to the above specifications)

Note) this specification is applied when the rated input voltage is 24 V DC and the temperature is 25 °C.

Circuit diagram

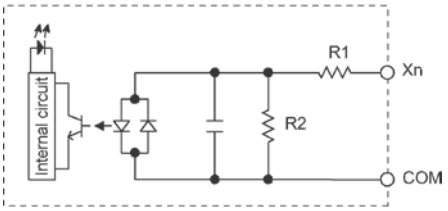

For X0 to X7: R1=5.1 kΩ R2=3 kΩ
From X8: R1=5.6 kΩ R2=1 kΩ

Limitations on number of simultaneous input on points

Reference: <2.5 Limitations on Number of Simultaneous Input/Output On Points>

Ramco National www.PanasonicSensors.com 1-800-280-6933

2.3.2 Transistor (Tr) Type (Common to NPN and PNP)

Transistor type (common to NPN and PNP)

Item		Description	
		C14	C30/C60
Insulation method		Optical coupler	
Rated input voltage		24V DC	
Operating voltage range		21.6 to 26.4V DC	
Rated input current		Approx. 8 mA (for control units X0 to X3) Approx. 4.7 mA (for control units X4 to X7) Approx. 4.3 mA (from control unit X8)	
Input points per common		8 points/common	16 points/common
		(Either the positive or negative of the input power supply can be connected to common terminal.)	
Min. on voltage/Min. on current		19.2 V DC/6 mA (for control units X0 to X3) 19.2 V DC/3 mA (from control unit X4)	
Max. off voltage/Max. off current		2.4V DC/1.3 mA (for control units X0 to X3) 2.4V DC/1 mA (from control unit X4)	
Input impedance		Approx. 3 kΩ (for control units X0 to X3) Approx. 5.1 kΩ (for control units X4 to X7) Approx. 5.6 kΩ (from control unit X8)	
Response time	off→on	For control units X0 to X3: 135 μs or less: normal input 5 μs or less [Note): high-speed counter, pulse catch, interrupt input settings For control units X4 to X7: 135 μs or less: normal input 50 μs or less [Note): high-speed counter, pulse catch, interrupt input settings From control unit X8 (C30/C60 only) : 0.6 ms or less	
	on→off	Same as above	
Operating mode indicator		LED display	
EN61131-2 Applicable type		TYPE3 (however, according to the above specifications)	

Note) this specification is applied when the rated input voltage is 24 V DC and the temperature is 25 °C.

Circuit diagram

[X0 to X3]

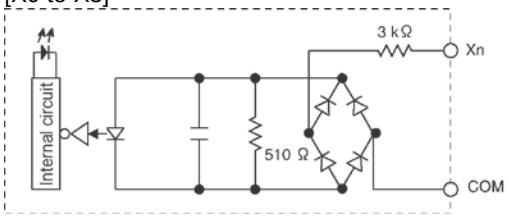

[From X4]

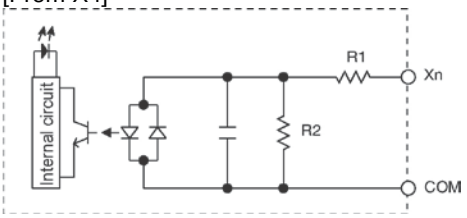

X4 to X7 :R1=5.1kΩ R2=3kΩ
From X8 :R1=5.6kΩ R2=1kΩ

Limitations on number of simultaneous input on points

Reference: <2.5 Limitations on Number of Simultaneous Input/Output On Points>

Ramco National www.PanasonicSensors.com 1-800-280-6933

2.4 Output Specifications

2.4.1 Relay (Ry) Type

Relay output specifications (For C14R/C30R/C60R control units)

Item		Description	
		C14	C30/C60
Insulation method		Relay insulation	
Output type		1a output (Relay cannot be replaced)	
Rated control capacity Note)		2 A 250 V AC, 2 A 30 V DC	
		(6 A or less/common)	(8 A or less/common)
Output points per common		1 point/common, 2 points/common, 3 points/common, 4 points/common	
Response time	off→on	Approx. 10 ms	
	on→off	Approx. 8 ms	
Lifetime	Mechanical	20 million times or more (Frequency of switching: 180 times/min.)	
	Electrical	100 thousand times or more (Frequency of switching at the rated control capacity: 20 times/min.)	
Surge absorber		None	
Operating mode indicator		LED display	

Note1) Resistance load

Circuit diagram

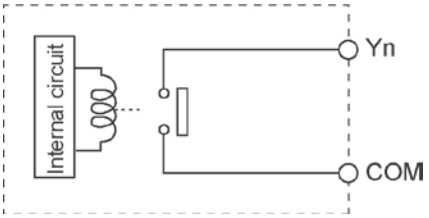

Limitations on number of simultaneous input on points

Reference: <2.5 Limitations on Number of Simultaneous Input/Output On Points>

Ramco National www.PanasonicSensors.com 1-800-280-6933

2.4.2 Transistor (Tr) Type (NPN)

Output specifications

Item		Description				
		C14			C30/C60	
Insulation method		Optical coupler				
Output type		Open collector				
Rated load voltage		5 to 24 V DC				
Allowable load voltage range		4.75 to 26.4 V DC				
Max. load current		0.5 A				
Max. inrush current		1.5 A				
Input points per common		6 points/Common			8 points/Common, 6 points/Common	
Off state leakage current		1 μA or less				
On state voltage drop		0.3 V DC or less				
Response time (at 25°C)	OFF→ON	2 μs or less (Y0 to Y3) (Load current: at 15 mA or more) 20 μs or less (C14: Y4 to Y5, C30/C60: Y4 to Y7)(Load current: at 15 mA or more) 1 ms or less (C14: None, C30/C60: from Y8)				
	ON→OFF	8 μs or less (Y0 to Y3) (Load current: at 15 mA or more) 30 μs or less (C14: Y4 to Y5, C30/C60: Y4 to Y7) (Load current: at 15 mA or more) 1 ms or less (C14: None, C30/C60: from Y8)				
External power supply (+ and – terminals)		Voltage	21.6 to 26.4 V DC			
		Current		Y0 to Y5 (Y7)	Y8 to YD	Y10 to Y17	Y18 to Y1D
			C14	40 mA or less	—	—	—
			C30	60 mA or less	35 mA or less	—	—
			C60	60 mA or less	35 mA or less	45 mA or less	35 mA or less
Surge absorber		Zener diode				
Operating mode indicator		LED display				

Circuit diagram

[NPN output]

[X0 to X3]

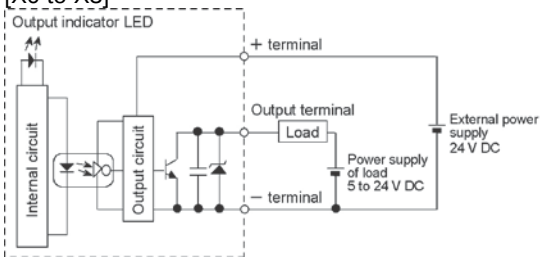

[From X4]

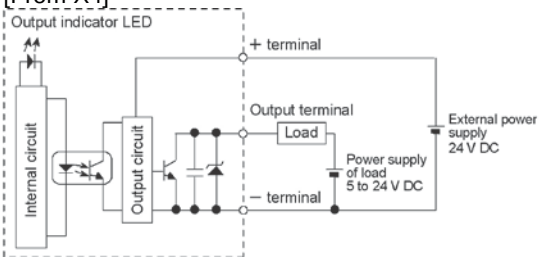

Limitations on number of simultaneous input on points

Reference: <2.5 Limitations on Number of Simultaneous Input/Output On Points>

Ramco National www.PanasonicSensors.com 1-800-280-6933

2.4.3 Transistor (Tr) Type (PNP)

Output specifications

Item		Description				
		C14		C30/C60		
Insulation method		Optical coupler				
Output type		Open collector				
Rated load voltage		24 V DC				
Allowable load voltage range		21.6 to 26.4 V DC				
Max. load current		0.5 A				
Max. inrush current		1.5 A				
Input points per common		6 points/Common		8 points/Common, 6 points/Common		
Off state leakage current		1 μA or less				
On state voltage drop		0.5 V DC or less				
Response time	OFF→ON	2 μs or less (Y0 to Y3) (Load current: at 15 mA or more) 20 μs or less (C14: Y4 to Y5, C30/C60: Y4 to Y7) (Load current: at 15 mA or more) 1 ms or less (C14: None, C30/C60: from Y8)				
	ON→OFF	8 μs or less (Y0 to Y3) (Load current: at 15 mA or more) 30 μs or less (C14: Y4 to Y5, C30/C60: Y4 to Y7) (Load current: at 15 mA or more) 1 ms or less (C14: None, C30/C60: from Y8)				
External power supply (+ and – terminals)		Voltage	21.6 to 26.4 V DC			
		Current		Y0 to Y5 (Y7)	Y8 to YD	Y10 to Y17	Y18 to Y1D
			C14	75 mA or less	—	—	—
			C30	95 mA or less	50 mA or less	—	—
			C60	95 mA or less	50 mA or less	65 mA or less	50 mA or less
Surge absorber		Zener diode				
Operating mode indicator		LED display				

Circuit diagram

[PNP output]

［Y0 to Y3］

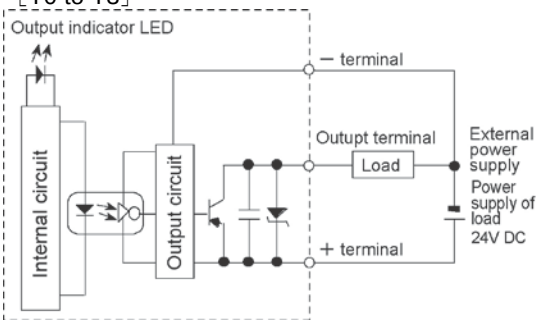

［from Y4］

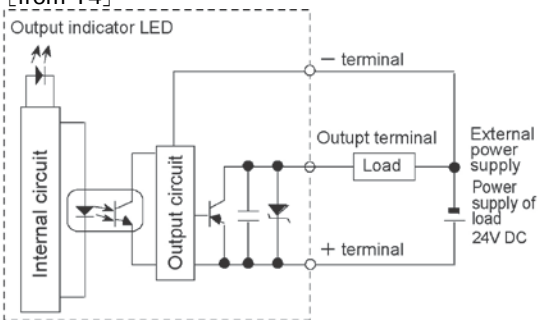

Limitations on number of simultaneous input on points

Reference: <2.5 Limitations on Number of Simultaneous Input/Output On Points>

Ramco National www.PanasonicSensors.com 1-800-280-6933

2.5 Limitations on Number of Simultaneous Input/Output On Points

2.5.1 Relay (Ry) Type (Stand-alone and With AFPX-COM5)

Keep the number of points which are simultaneously on within the following range as determined by the ambient temperature.

Product number	Limitations on number of simultaneous input on points	Limitations on number of simultaneous output on points
AFPX-C14R	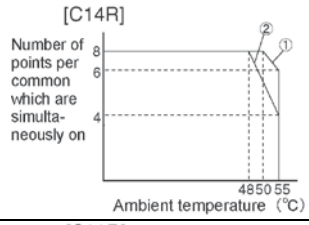	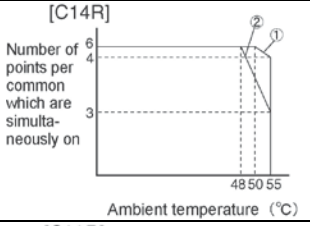
AFPX-C30R	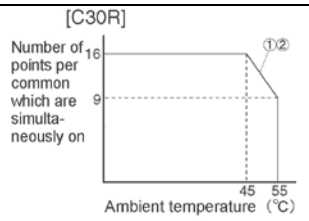	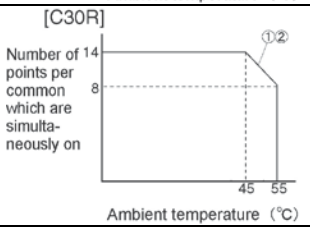
AFPX-C60R	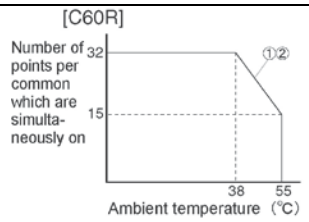	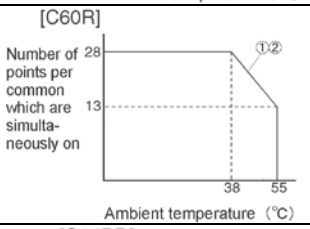
AFPX-C14RD	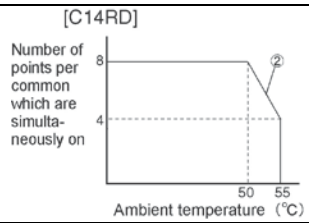	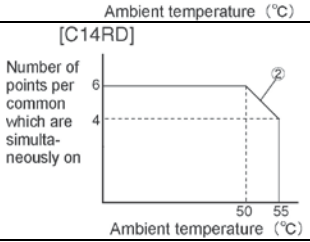
AFPX-C30RD	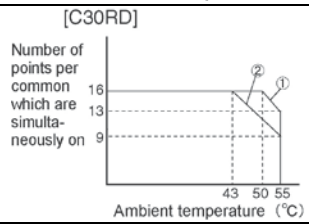	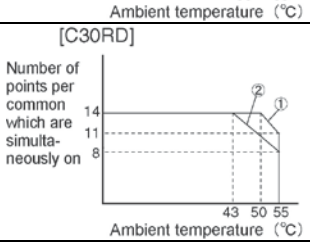
AFPX-C60RD	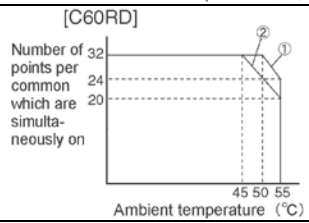	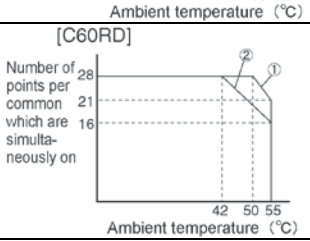

- Configuration
① Stand-alone
② COM5
.

Ramco National www.PanasonicSensors.com 1-800-280-6933

2.5.2 Relay (Ry) Type (With AFPX-DA2 and AFPX-A21 (Current Output))

Keep the number of points which are simultaneously on within the following range as determined by the ambient temperature.

Product number	Limitations on number of simultaneous input on points	Limitations on number of simultaneous output on points
AFPX-C14R	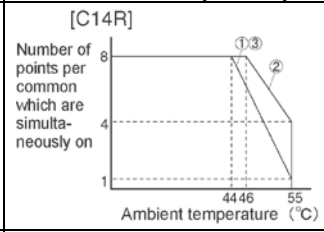	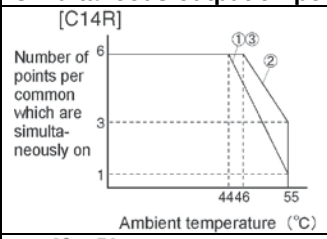
AFPX-C30R	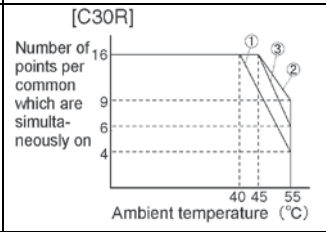	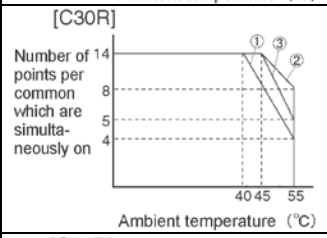
AFPX-C60R	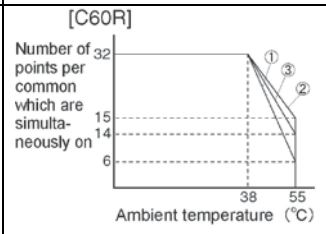	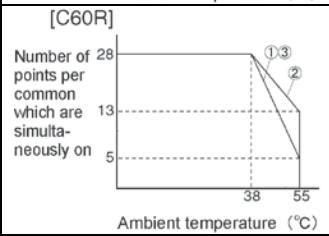
AFPX-C14RD	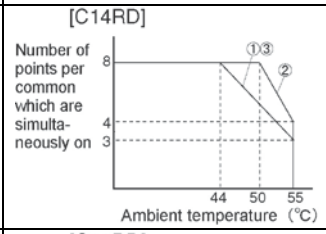	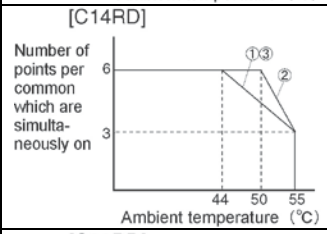
AFPX-C30RD	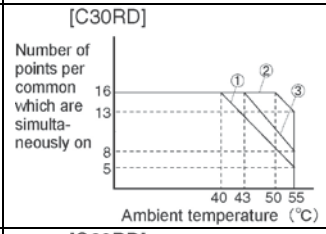	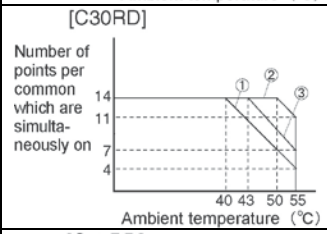
AFPX-C60RD	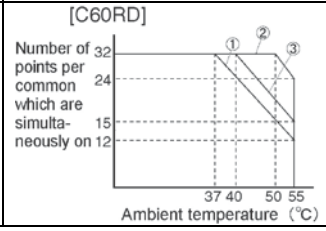	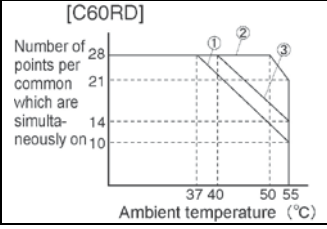

- Configuration
① DA2
② A21
③ A21+A21
DA2+DA2 (*)
DA2+A21 (*)

* Up to 2 channels can be used for the current output.

Ramco National www.PanasonicSensors.com 1-800-280-6933

2.5.3 Relay (Ry) Type (AFPX-DA2 and AFPX–A21 Voltage Output)

Keep the number of points which are simultaneously on within the following range as determined by the ambient temperature.

Product number	Limitations on number of simultaneous input on points	Limitations on number of simultaneous output on points
AFPX-C14R	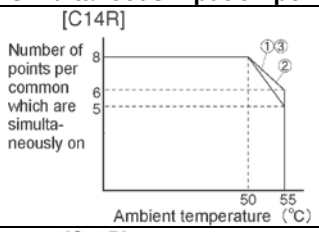	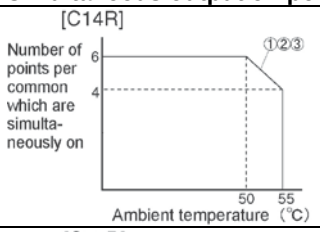
AFPX-C30R	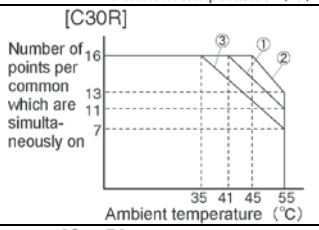	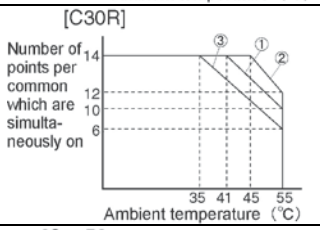
AFPX-C60R	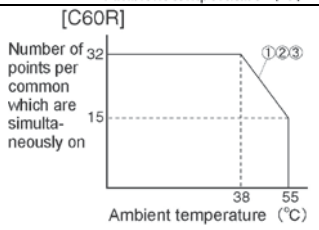	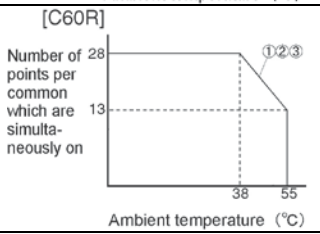
AFPX-C14RD	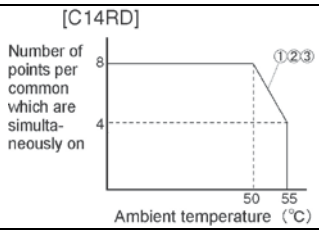	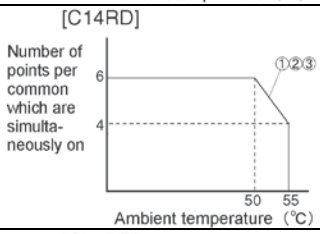
AFPX-C30RD	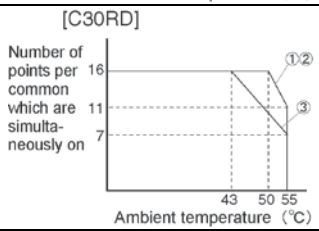	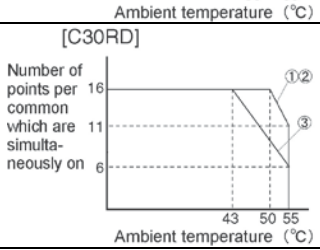
AFPX-C60RD	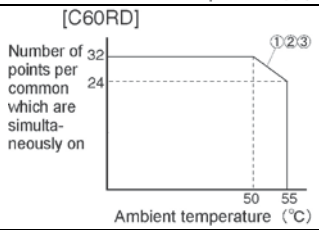	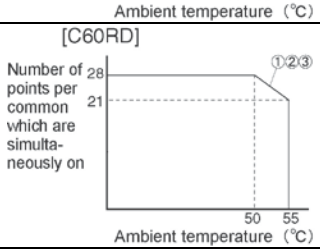

- Configuration
① DA2
② A21
③ A21+A21
DA2+DA2
DA2+A21

Ramco National www.PanasonicSensors.com 1-800-280-6933

2.5.4 Transistor (Tr) Type (NPN) (Stand-alone and With AFPX-COM5)

Keep the number of points which are simultaneously on within the following range as determined by the ambient temperature.

Product number	Limitations on number of simultaneous input on points	Limitations on number of simultaneous output on points
AFPX-C14T	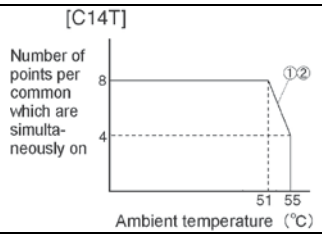	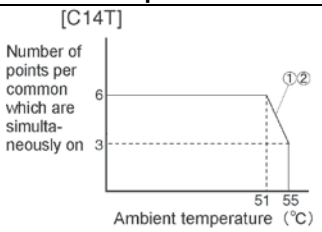
AFPX-C30T	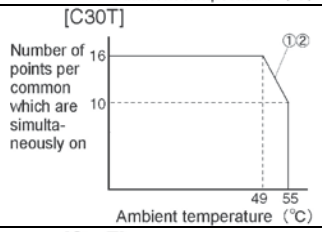	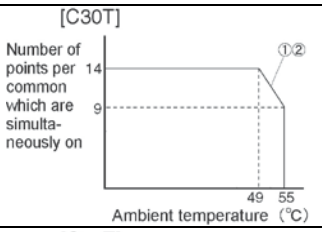
AFPX-C60T	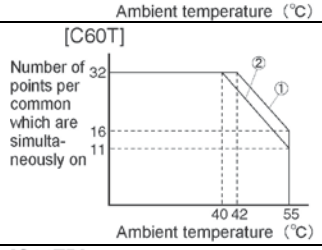	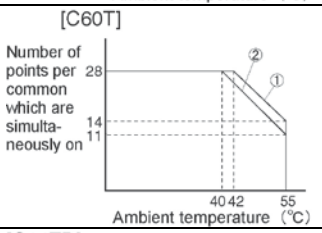
AFPX-C14TD	[C14TD] No restriction	[C14TD] No restriction
AFPX-C30TD	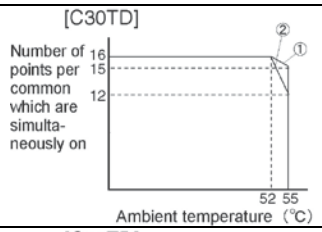	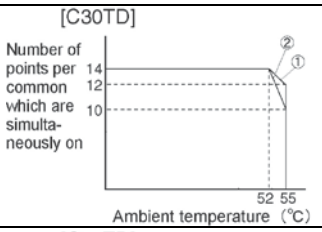
AFPX-C60TD	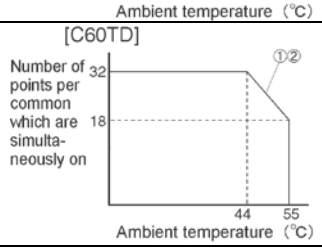	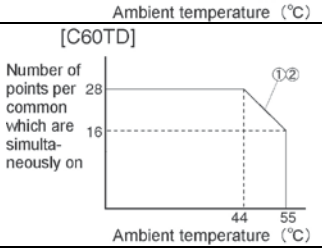

- Configuration
① Stand-alone
② COM5
.

Ramco National www.PanasonicSensors.com 1-800-280-6933

2.5.5 Transistor (Tr) Type (NPN) (With AFPX-DA2 and A21 (Current Output))

Keep the number of points which are simultaneously on within the following range as determined by the ambient temperature.

Product number	Limitations on number of simultaneous input on points	Limitations on number of simultaneous output on points
AFPX-C14T	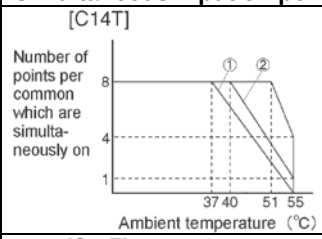	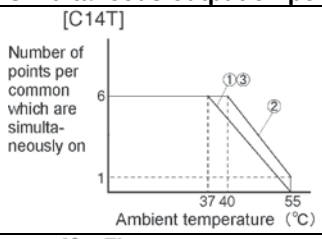
AFPX-C30T	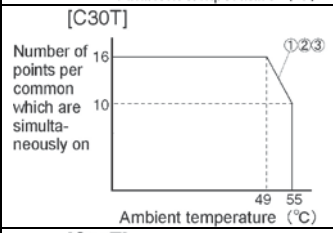	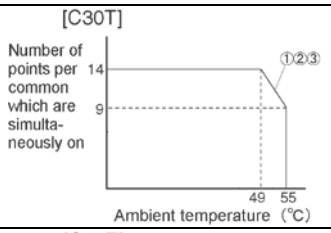
AFPX-C60T	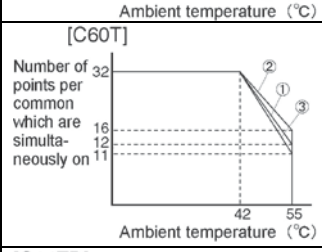	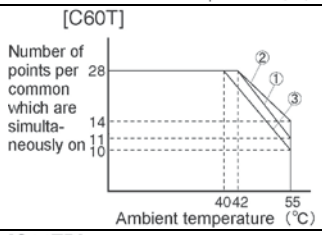
AFPX-C14TD	[C14TD] No restriction	[C14TD] No restriction
AFPX-C30TD	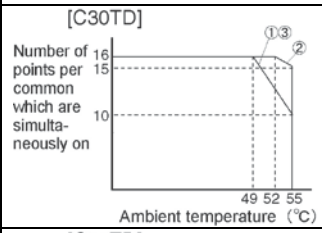	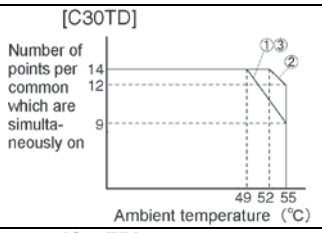
AFPX-C60TD	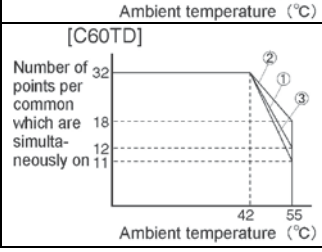	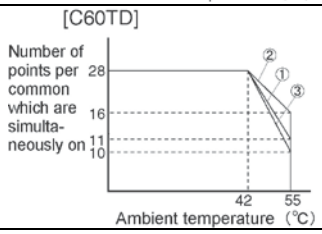

- Configuration
① DA2
② A21
③ A21+A21
DA2+DA2 (*)
DA2+A21 (*)

* Up to 2 channels can be used for the current output.

Ramco National www.PanasonicSensors.com 1-800-280-6933

2.5.6 Transistor (Tr) Type (NPN) (With AFPX-DA2 and A21 (Voltage Output)

Keep the number of points which are simultaneously on within the following range as determined by the ambient temperature.

Product number	Limitations on number of simultaneous input on points	Limitations on number of simultaneous output on points
AFPX-C14T	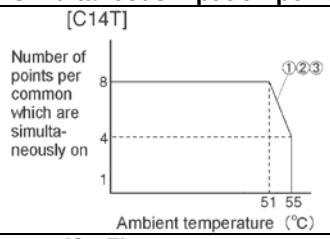	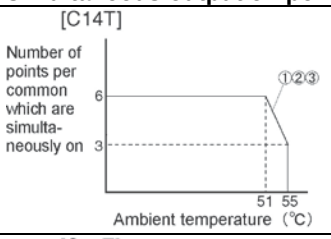
AFPX-C30T	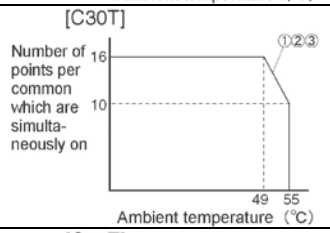	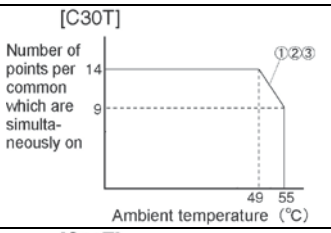
AFPX-C60T	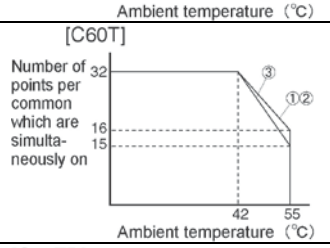	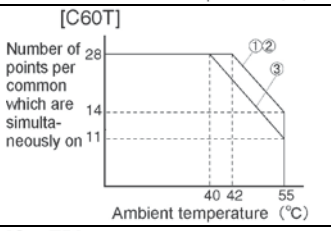
AFPX-C14TD	[C14TD] No restriction	[C14TD] No restriction
AFPX-C30TD	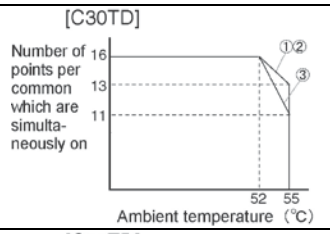	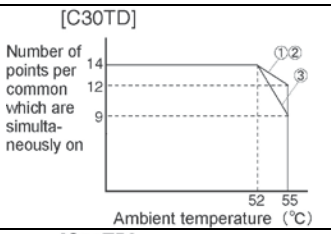
AFPX-C60TD	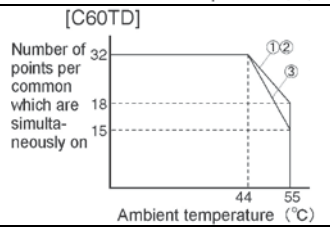	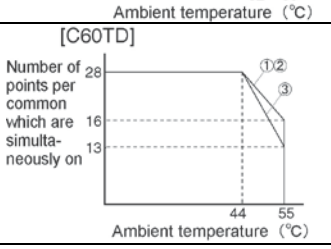

- Configuration
① DA2
② A21
③ A21+A21
DA2+DA2
DA2+A21

Ramco National www.PanasonicSensors.com 1-800-280-6933

2.5.7 Transistor (Tr) Type (PNP) (Stand-alone and With AFPX-COM5)

Keep the number of points which are simultaneously on within the following range as determined by the ambient temperature.

Product number	Limitations on number of simultaneous input on points	Limitations on number of simultaneous output on points
AFPX-C14P	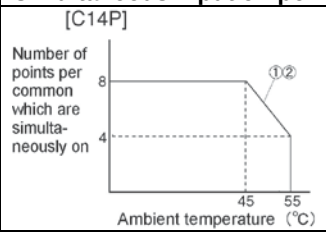	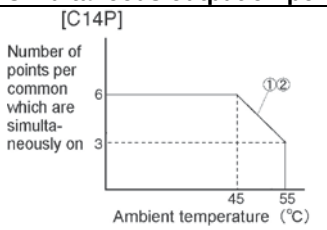
AFPX-C30P	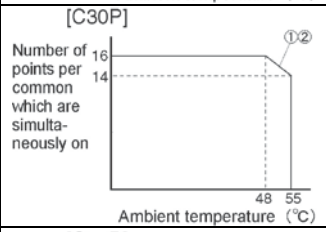	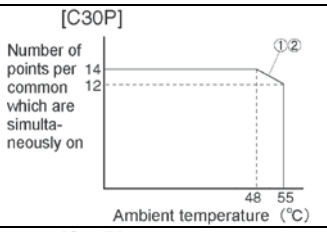
AFPX-C60P	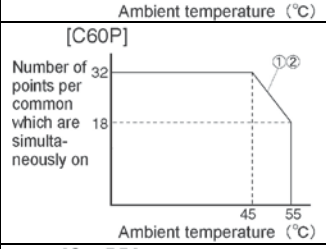	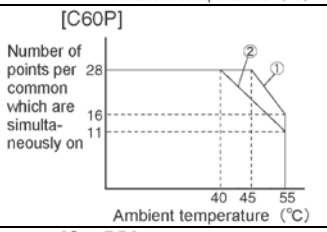
AFPX-C14PD	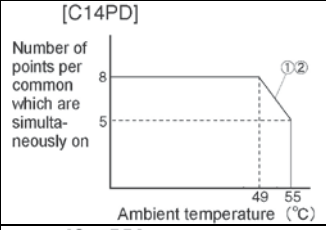	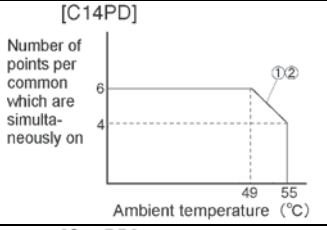
AFPX-C30PD	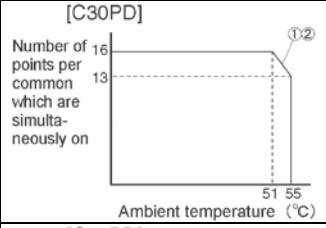	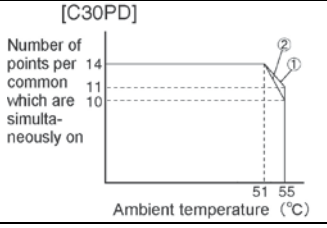
AFPX-C60PD	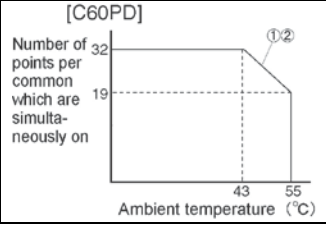	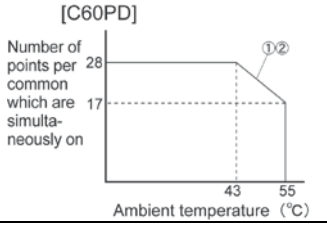

- Configuration
① Stand-alone
② COM5

Ramco National www.PanasonicSensors.com 1-800-280-6933

2.5.8 Transistor (Tr) Type (PNP) (With AFPX-DA2 and A21 (Current Output))

Keep the number of points which are simultaneously on within the following range as determined by the ambient temperature.

Product number	Limitations on number of simultaneous input on points	Limitations on number of simultaneous output on points
AFPX-C14P	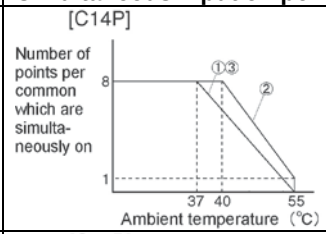	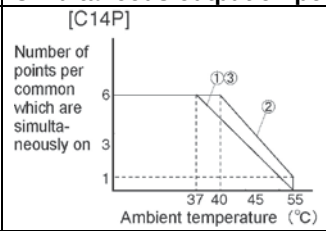
AFPX-C30P	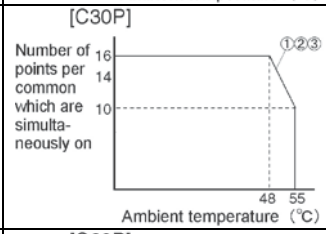	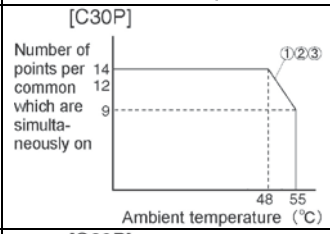
AFPX-C60P	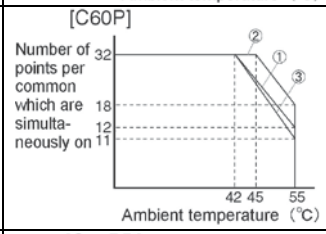	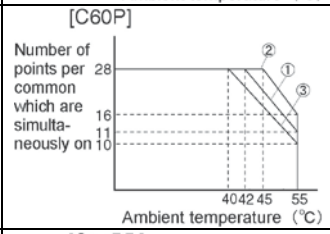
AFPX-C14PD	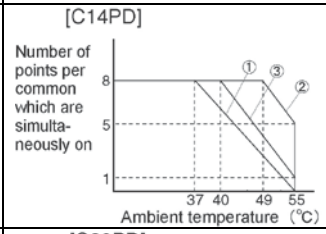	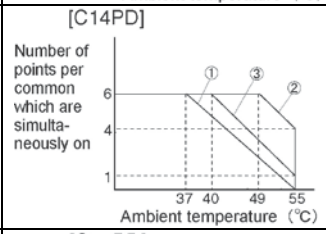
AFPX-C30PD	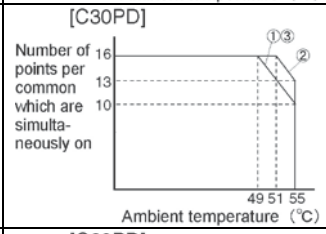	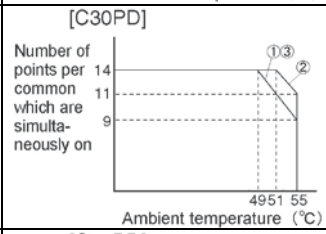
AFPX-C60PD	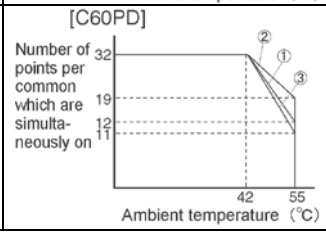	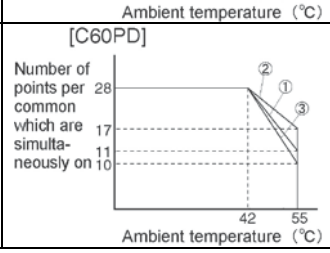

- Configuration
① DA2
② A21
③ A21+A21
DA2+DA2 (*)
DA2+A21 (*)

* Up to 2 channels can be used for the current output.

Ramco National www.PanasonicSensors.com 1-800-280-6933

2.5.9 Transistor (Tr) Type (PNP) (With AFPX-DA2 and A21 Voltage Output)

Keep the number of points which are simultaneously on within the following range as determined by the ambient temperature.

Product number	Limitations on number of simultaneous input on points	Limitations on number of simultaneous output on points
AFPX-C14P	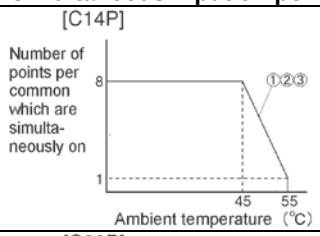	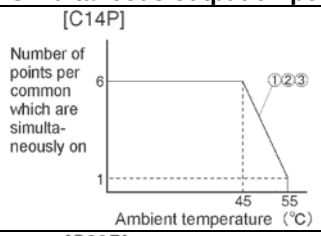
AFPX-C30P	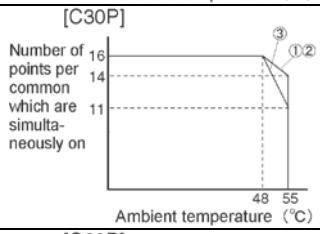	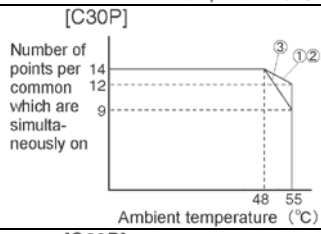
AFPX-C60P	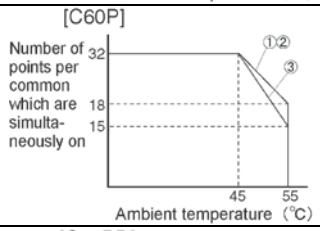	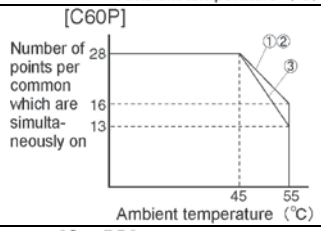
AFPX-C14PD	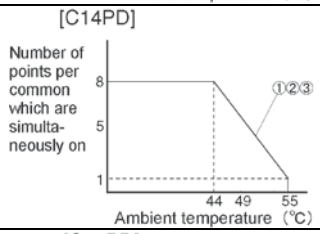	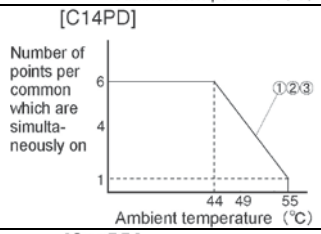
AFPX-C30PD	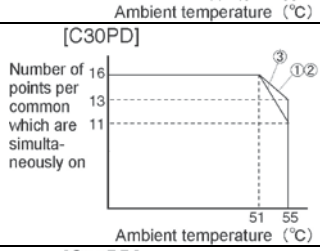	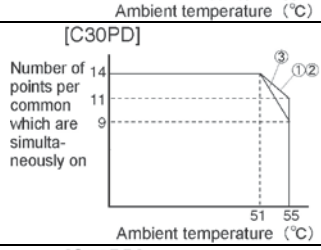
AFPX-C60PD	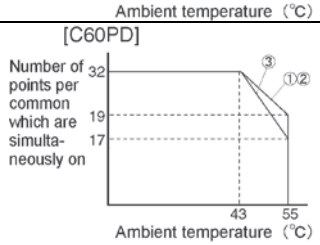	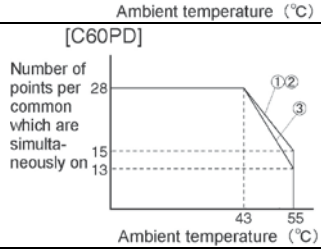

- Configuration
① DA2
② A21
③ A21+A21
DA2+DA2
DA2+A21

Ramco National www.PanasonicSensors.com 1-800-280-6933

2.6 Terminal Layout

2.6.1 Relay Type

AFPX-C14R

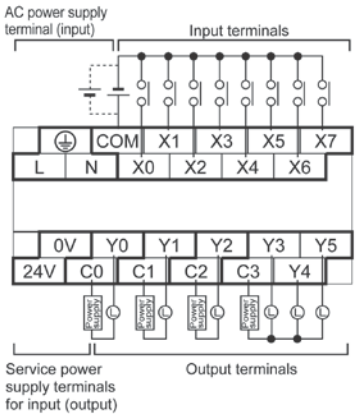

AFPX-C14RD

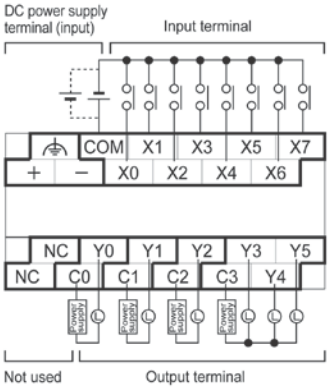

● Relation between output terminals and COM terminals

Y0 — C0
Y1 — C1
Y2 — C2
Y3 to Y5 — C3

AFPX-C30R

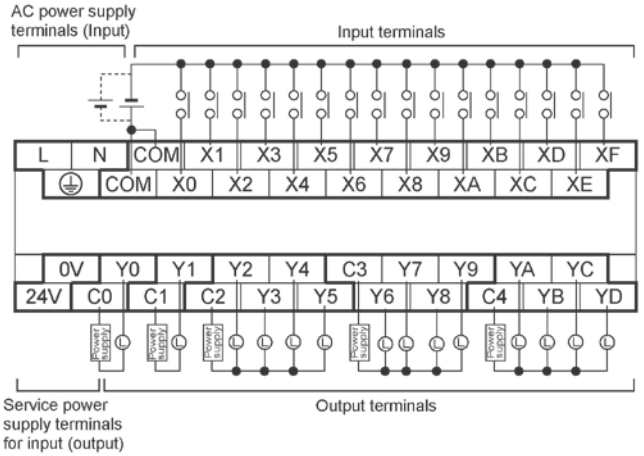

● Relation between output terminals and COM terminals

Y0 — C0
Y1 — C1
Y2 to Y5 — C2
Y6 to Y9 — C3
YA to YD — C4

AFPX-C30RD

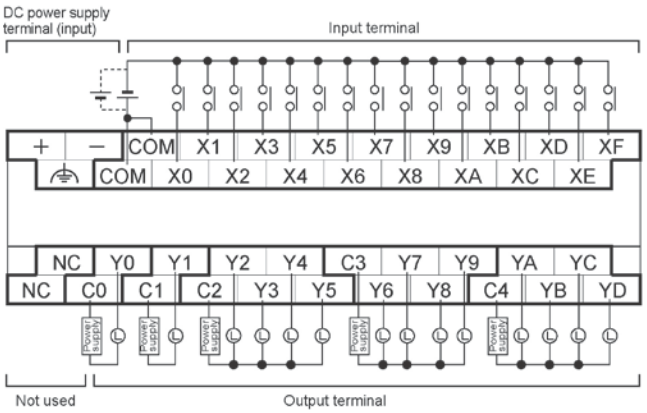

● Relation between output terminals and COM terminals

Y0 — C0
Y1 — C1
Y2 to Y5 — C2
Y6 to Y9 — C3
YA to YD — C4

Ramco National www.PanasonicSensors.com 1-800-280-6933

AFPX-C60R

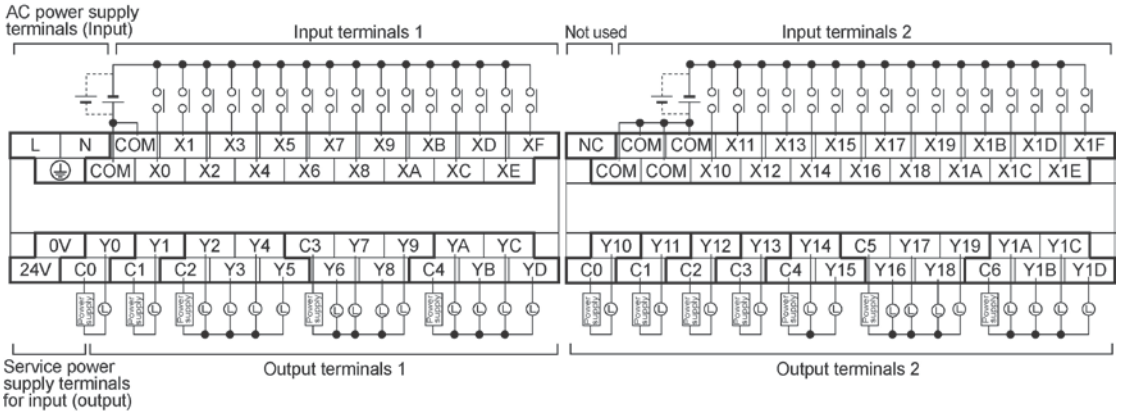

AFPX-C60RD

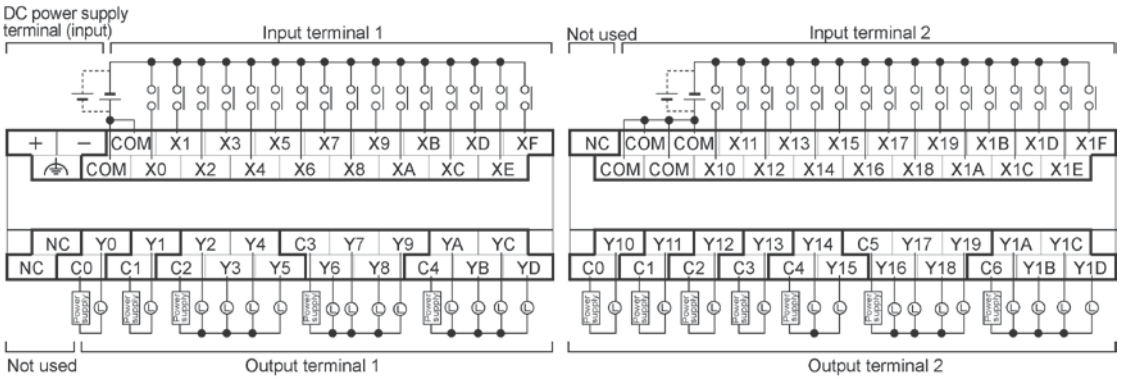

● Relation between output terminals and COM

Y0	C0	Y10	C0
Y1	C1	Y11	C1
Y2 to Y5	C2	Y12	C2
Y6 to Y9	C3	Y13	C3
YA to YD	C4	Y14 to Y15	C4
		Y16 to Y19	C5
		Y1A to Y1D	C6

Key Point:

Input terminal:

Each COM terminal in the same terminal block is connected within the unit.
However, the COM terminals of the input terminals 1 and 2 for C60 are isolated. (They are not connected internally.)

Output terminal:

Each COM port (CO, C1 …) is separate. Use them in the range surrounded by the bold black lines.

Ramco National www.PanasonicSensors.com 1-800-280-6933

2.6.2 Transistor type

AFPX-C14T

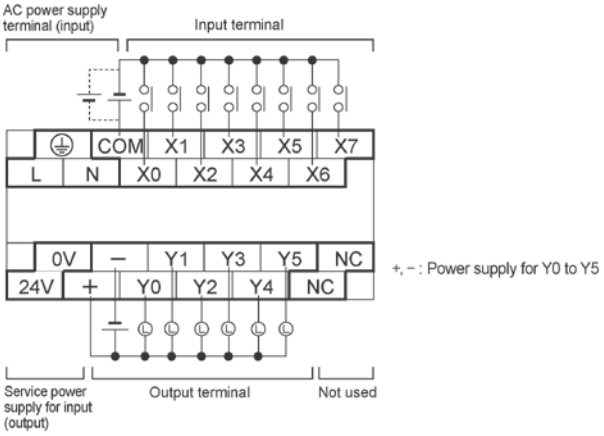

AFPX-C14P

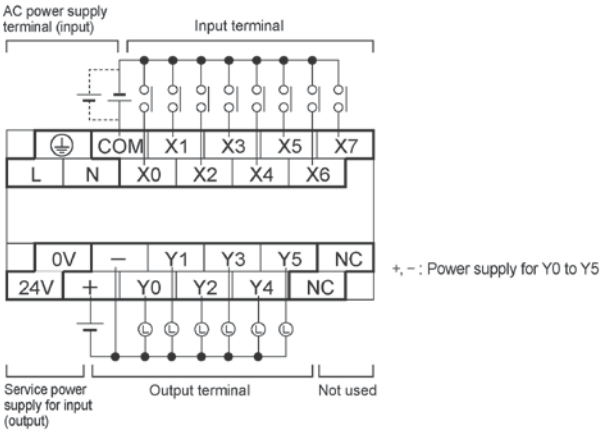

AFPX-C14TD

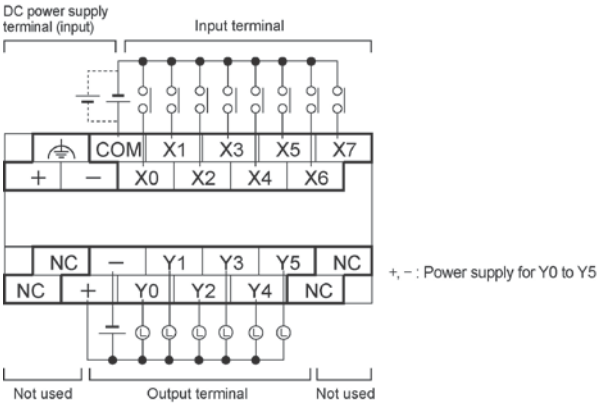

Ramco National www.PanasonicSensors.com 1-800-280-6933

AFPX-C14PD

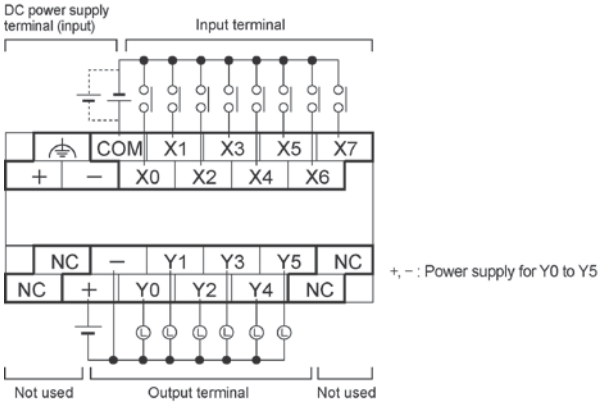

AFPX-C30T

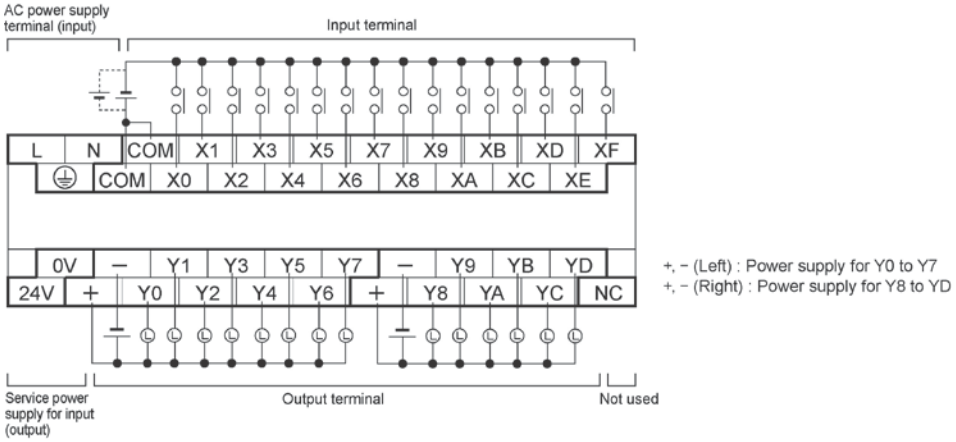

AFPX-C30P

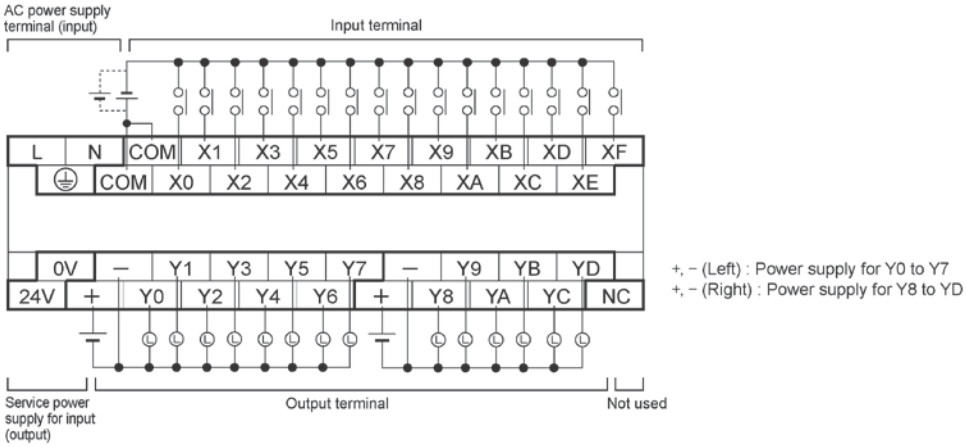

Ramco National www.PanasonicSensors.com 1-800-280-6933

AFPX-C30TD

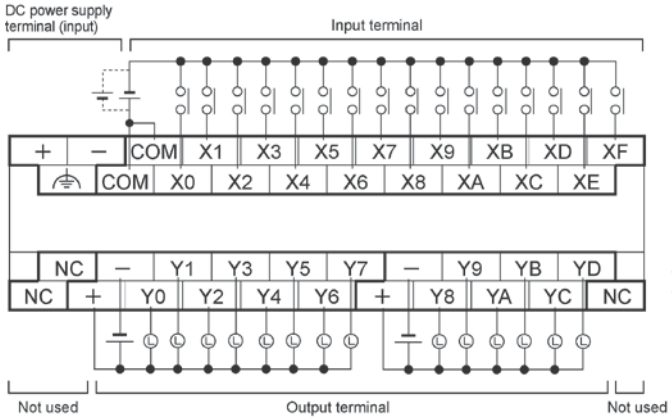

+, − (Left) : Power supply for Y0 to Y7
+, − (Right) : Power supply for Y8 to YD

AFPX-C30PD

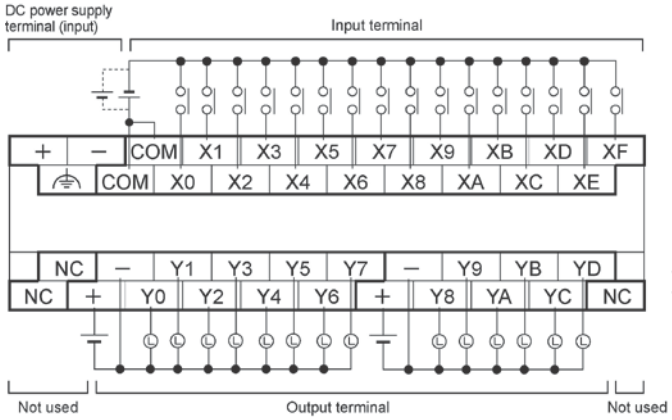

+, − (Left) : Power supply for Y0 to Y7
+, − (Right) : Power supply for Y8 to YD

AFPX-C60T

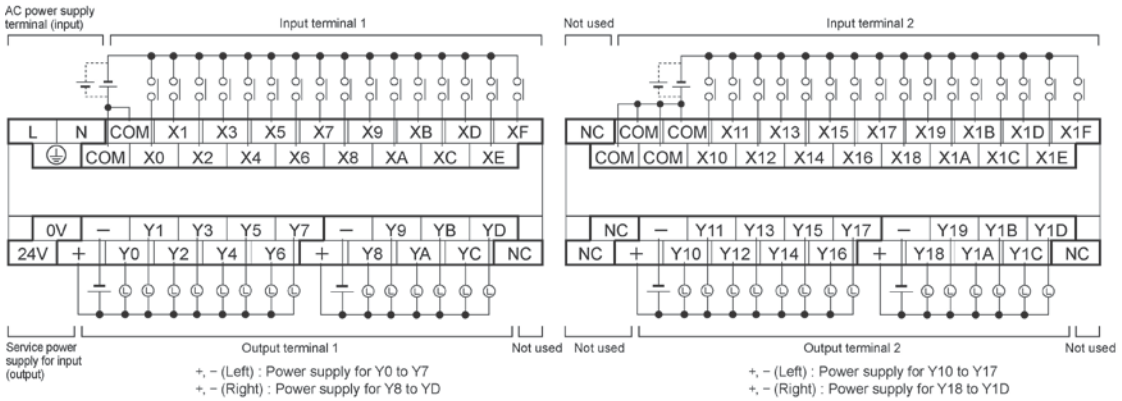

+, − (Left) : Power supply for Y0 to Y7
+, − (Right) : Power supply for Y8 to YD

+, − (Left) : Power supply for Y10 to Y17
+, − (Right) : Power supply for Y18 to Y1D

Ramco National www.PanasonicSensors.com 1-800-280-6933

AFPX-C60P

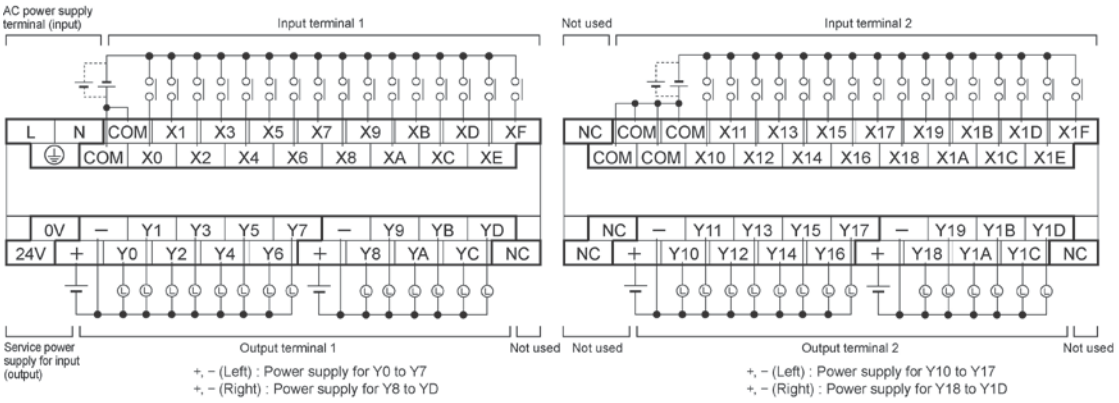

AFPX-C60TD

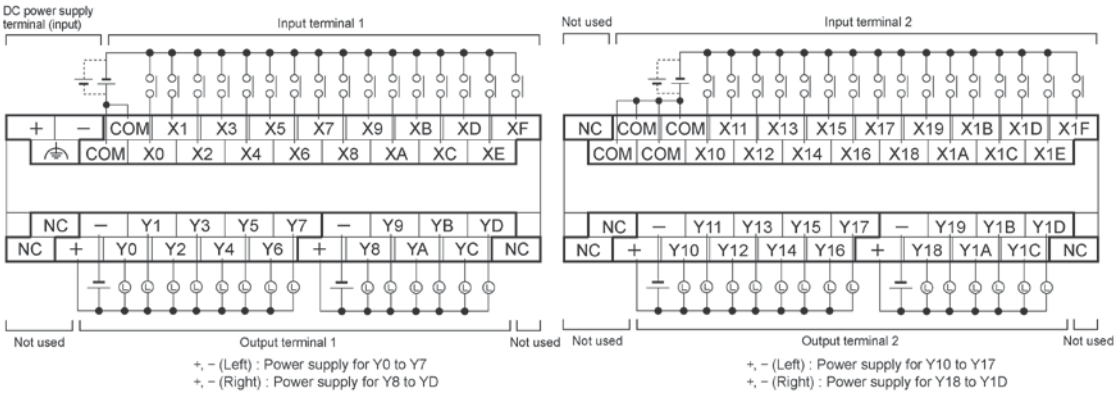

AFPX-C60PD

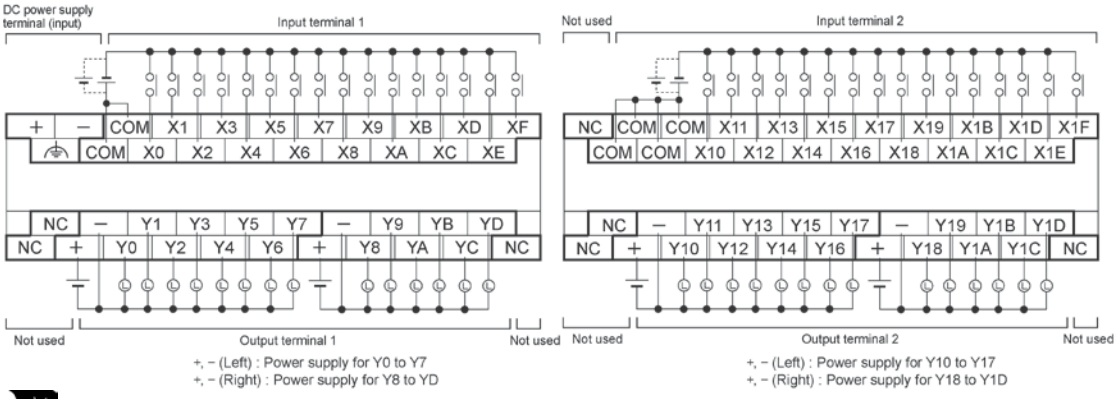

Key Point:

Input terminal:

Each COM terminal in the same terminal block is connected within the unit.
However, the COM terminals of the input terminals 1 and 2 for C60 are isolated. (They are not connected internally.)

Output terminal:

Each power supply terminal is separate. Use them in the range surrounded by the bold black lines.

Ramco National www.PanasonicSensors.com 1-800-280-6933

Chapter 3

Expansion Cassette and Expansion FP0 Adapter Specifications

3.1 Expansion Method

Two types of expansion method are available for the FP-X.

1. **Installs the FP-X expansion unit or FP0 expansion unit (expansion FP0 adapter) using the expansion cable.**
2. **Installs the add-on cassette to the cassette mounting part of the FP-X control unit.**

3.1.1 Expansion Using the Expansion Cable

For the FP-X, the FP-X expansion unit and the FP0 expansion unit (expansion FP0 adapter AFPX-EFP0 is necessary) can be used by using the exclusive expansion cable.

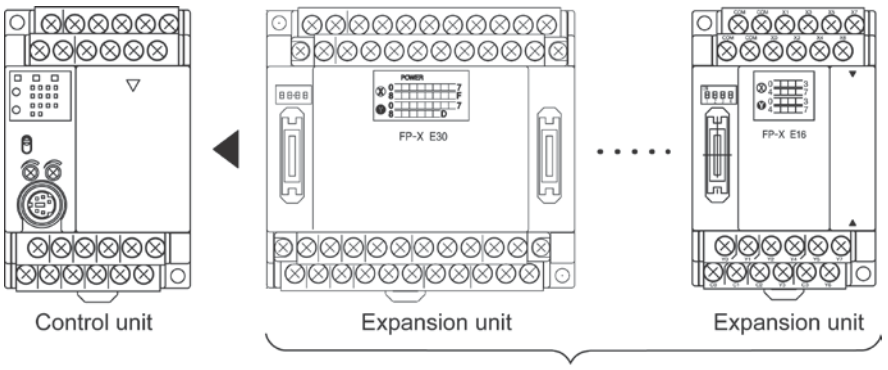

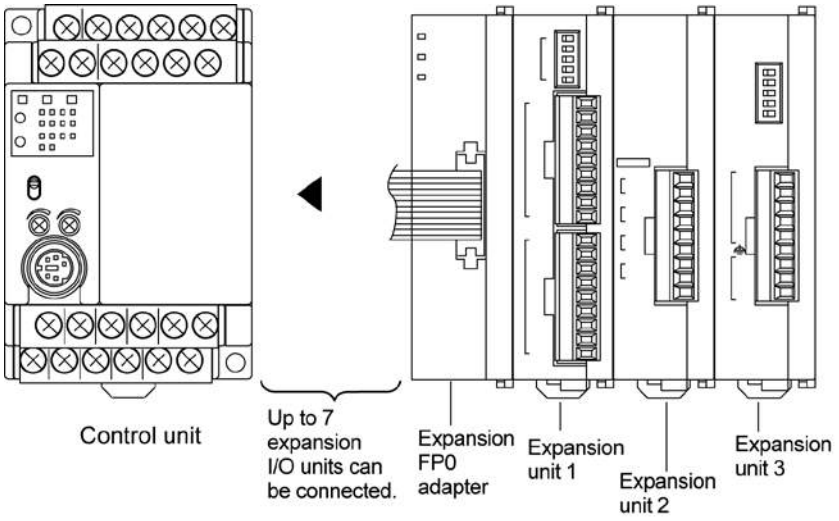

Note: Only one expansion FP0 adapter can be installed at the last position of the FP-X expansion bus. (It should be installed at the right hand side of the AFPX-E16 and E30.)
Up to seven FP-X expansion I/O units can be also installed between the control unit and the expansion FP0 adapter. However, there are restrictions on E14/E16.

Reference: <1.3.1 Restrictions on FP-X Expansion Unit>

Ramco National www.PanasonicSensors.com 1-800-280-6933

3.2 FP-X Expansion Unit

3.2.1 Parts and Functions

FP-X E16 exapansion I/O unit

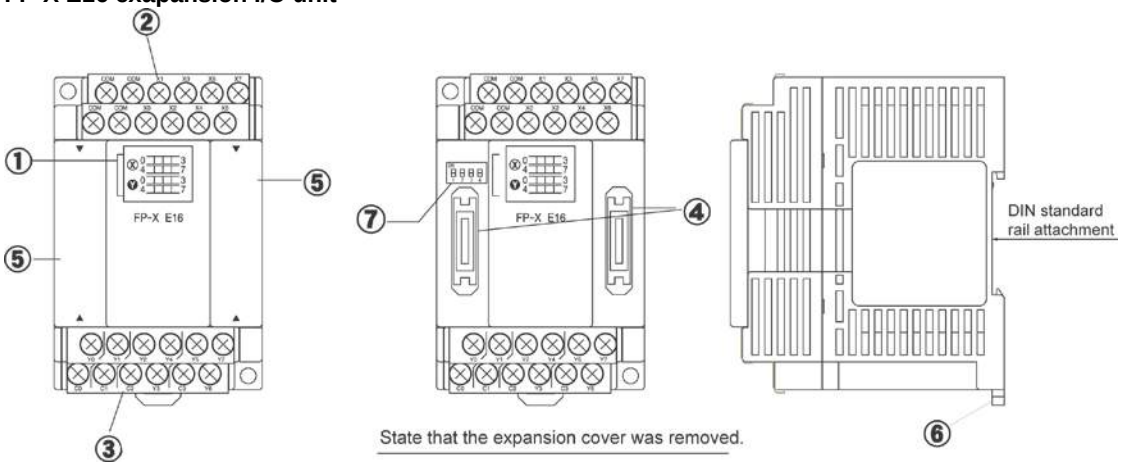

FP-X E30 exapansion I/O unit

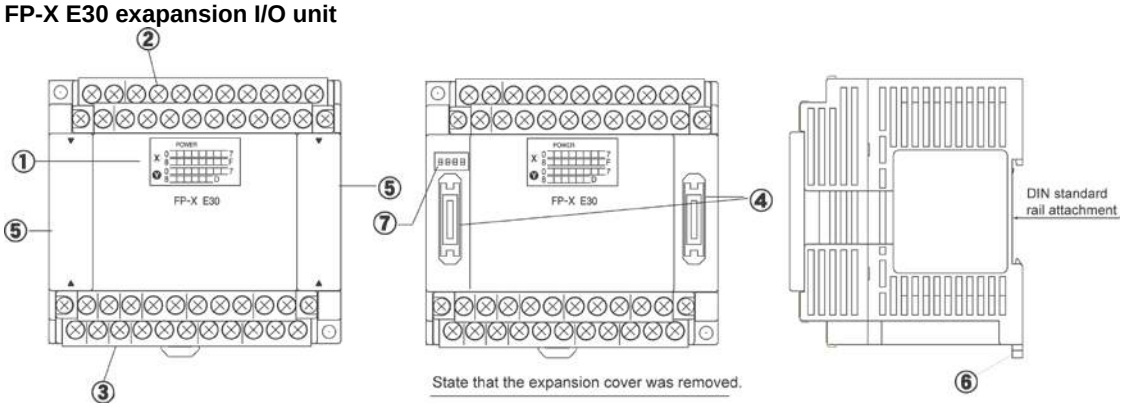

① Input and Output indicator LEDs
Indicates the on/off status of the input and output.
② Input terminal block
This is the input terminal. A solderless terminal for M3 can be used.
③ Output terminal block
This is the output terminal. A solderless terminal for M3 can be used.
④ Expansion connector
Connects with the control unit, expansion unit and the expansion FP0 adapter using the exclusive expansion cable.
⑤ Expansion cover
It is used after the expansion cable has been fitted.
⑥ DIN rail attachment lever
This lever enables the expansion unit to attach to a DIN rail at a touch.
⑦ Terminator setting DIP switch
All switches should be turned on for the expansion unit installed at the last position .

Ramco National www.PanasonicSensors.com 1-800-280-6933

3.2.2 Power Supply Specifications

AC Power Supply

Item	Specifications
	E30
Rated voltage	100 to 240 V AC
Voltage regulation range	85 to 264 V AC
Inrush current	40 A or less (at 240 V AC, 25 °C)
Momentary power off time	10 ms (when using 100 V AC)
Frequency	50/60 Hz (47 to 63 Hz)
Leakage current	0.75 mA or less between input and protective earth terminals
Internal power supply part Guaranteed life	20,000 hours (at 55 °C)
Fuse	Built-in (Cannot be replaced)
Insulation system	Transformer insulation
Terminal screw	M3

Service Power Supply for Input (Output) (AC power supply type only)

Item	Specifications
	E30
Rated output voltage	24 V DC
Voltage regulation range	21.6 to 26.4 V DC
Rated output current	0.4 A
Overcurrent protection function Note)	Available
Terminal screw	M3

Note) This is a function to protect overcurrent temporarily. If a current load that is out of the specifications is connected, it may lead to damages.

DC Power Supply

Item	Specifications
	E30
Rated voltage	24 V DC
Voltage regulation range	20.4 to 28.8 V DC
Inrush current	12 A or less (at 25 °C)
Momentary power off time	10 ms
Internal power supply part Guaranteed life	20,000 hours (at 55 °C)
Fuse	Built-in (Cannot be replaced)
Insulation system	Transformer insulation
Terminal screw	M3

Ramco National www.PanasonicSensors.com 1-800-280-6933

3.2.3 Input and output specifications

Input specifications

Item		Description	
		E16	E30
Insulation method		Optical coupler	
Rated input voltage		24 V DC	
Operating voltage range		21.6 to 26.4 V DC	
Rated input current		Approx. 4.3 mA	
Input points per common		8 points/common	16 points/common
		(Either the positive or negative of input power supply can be connected to common terminal.)	
Min. on voltage/Min. on current		19.2 V DC/3 mA	
Max. off voltage/Max. off current		2.4 V DC/1 mA	
Input impedance		Approx. 5.6 kΩ	
Response time	off→on	0.6 ms or less	
	on→off	0.6 ms or less	
Operating mode indicator		LED display	
EN61131-2Applicable type		TYPE3 (however, according to the above specifications)	

Circuit diagram

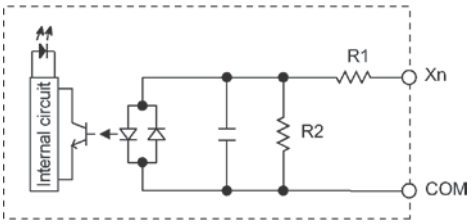

: R1=5.6 kΩ R2=1 kΩ

Relay output specifications

Item		Description	
		E16/E14	E30
Insulation method		Relay insulation	
Output type		1a output (Relay cannot be replaced.)	
Rated control capacity Note)		2 A 250 V AC, 2 A 30 V DC	
		(6 A or less/common)	(8 A or less/common)
Output points per common		1 point/common, 3 points/common	1 point/common, 4 points/common
Response time	off→on	Approx. 10 ms	
	on→off	Approx. 8 ms	
Lifetime	Mechanical	20 million times or more (Frequency of switching: 180 times/min.)	
	Electrical	100 thousand times or more (Frequency of switching at the rated control capacity: 20 times/min.)	
Surge absorber		None	
Operating mode indicator		LED display	

Note) Resistance load

Circuit diagram

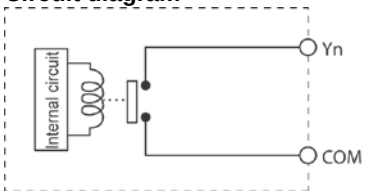

Ramco National www.PanasonicSensors.com 1-800-280-6933

Transistor type (NPN)

Item		Description			
		E16			E30
Insulation method		Optical coupler			
Output type		Open collector			
Rated load voltage		5 to 24 V DC			
Allowable load voltage range		4.75 to 26.4 V DC			
Max. load current		0.5 A			
Max. inrush current		1.5 A			
Input points per common		8 points/Common			8 points/Common, 6 points/Common
Off state leakage current		1 μA or less			
On state voltage drop		0.3 V DC or less			
Response time	OFF→ON	1 ms or less			
	ON→OFF	1 ms or less			
External power supply (+ and – terminals)		Voltage	21.6 to 26.4 V DC		
		Current		Y0 to Y7	Y8 to YD
			E16	45 mA or less	—
			E30	45 mA or less	35 mA or less
Surge absorber		Zener diode			
Operating mode indicator		LED display			

Circuit diagram

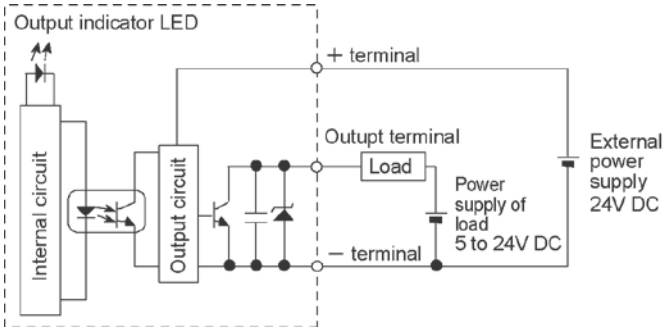

Ramco National www.PanasonicSensors.com 1-800-280-6933

Transistor type (PNP)

Item		Description			
		E16			E30
Insulation method		Optical coupler			
Output type		Open collector			
Rated load voltage		24 V DC			
Allowable load voltage range		21.6 to 26.4 V DC			
Max. load current		0.5 A			
Max. inrush current		1.5 A			
Input points per common		8 points/Common			8 points/Common, 6 points/Common
Off state leakage current		1 μA or less			
On state voltage drop		0.5 V DC or less			
Response time	OFF→ON	1 ms or less			
	ON→OFF	1 ms or less			
External power supply (+ and – terminals)		Voltage	21.6 to 26.4 V DC		
		Current		Y0 to Y7	Y8 to YD
			E16	65 mA or less	—
			E30	65 mA or less	50 mA or less
Surge absorber		Zener diode			
Operating mode indicator		LED display			

Circuit diagram

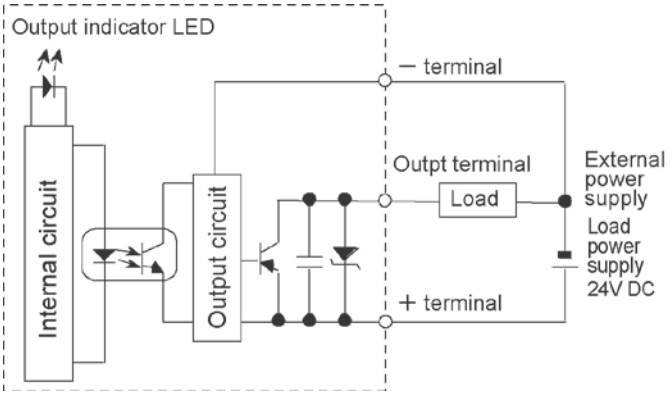

Ramco National www.PanasonicSensors.com 1-800-280-6933

3.2.4 Terminal layout

AFPX-E16R

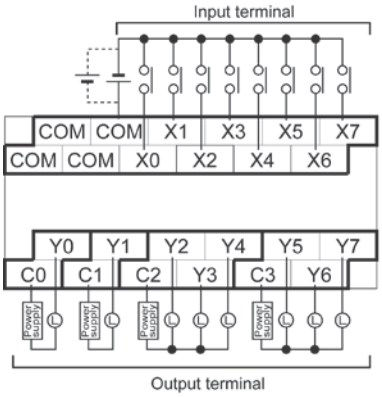

● Relations between the output terminals and COM terminals

Y1 ——— C0
Y0 ——— C1
Y2 to Y4 ——— C2
Y5 to Y7 ——— C3

AFPX-E16T

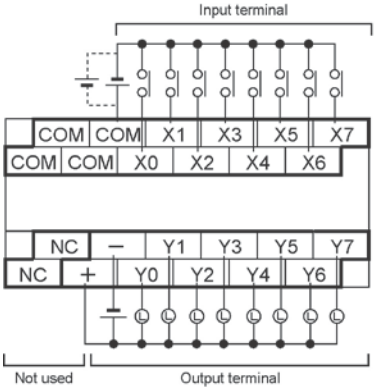

AFPX-E16P

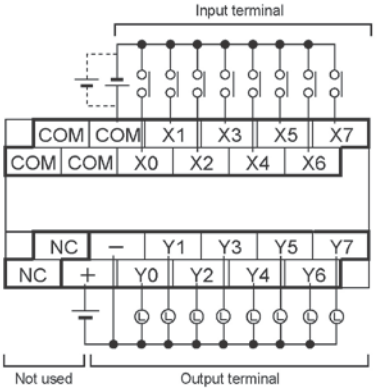

+, – : Power supply for Y0 to Y7

AFPX-E16X

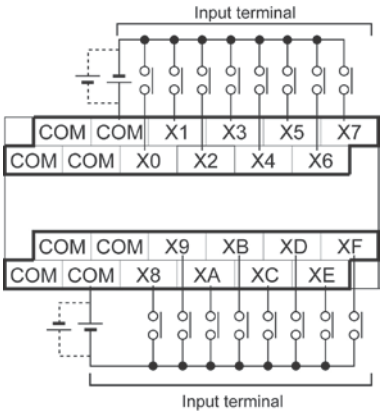

AFPX-E14YR

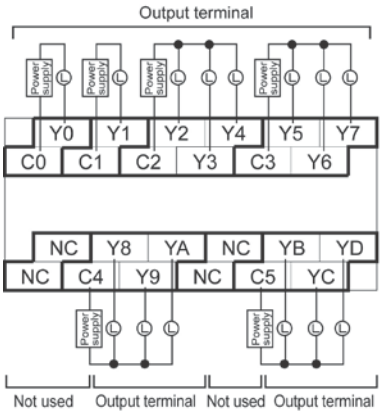

● Relations between the output terminals and COM terminals

Y1 ——— C0
Y0 ——— C1
Y2 to Y4 ——— C2
Y5 to Y7 ——— C3
Y8 to YA ——— C4
YB to YD ——— C5

Ramco National www.PanasonicSensors.com 1-800-280-6933

AFPX-E30R

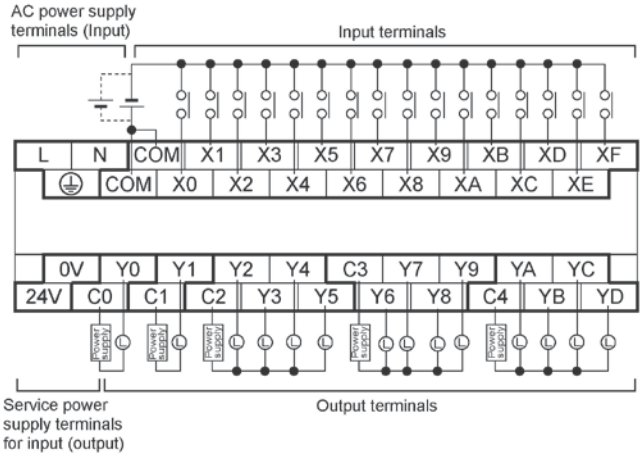

● Relation between output terminals and COM terminals

Y0 ——— C0
Y1 ——— C1
Y2 to Y5 ——— C2
Y6 to Y9 ——— C3
YA to YD ——— C4

AFPX-E30RD

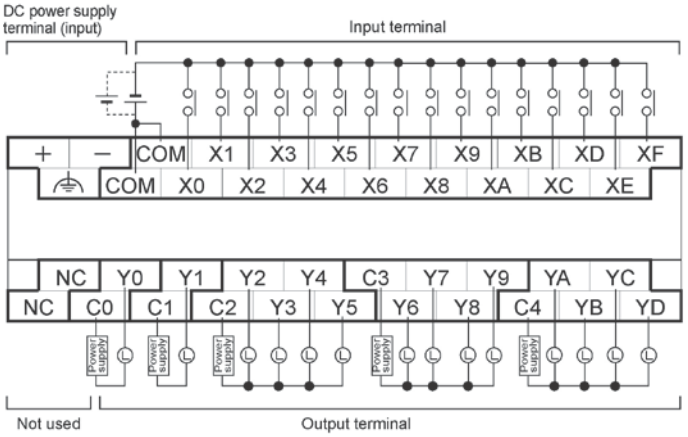

● Relation between output terminals and COM terminals

Y0 ——— C0
Y1 ——— C1
Y2 to Y5 ——— C2
Y6 to Y9 ——— C3
YA to YD ——— C4

AFPX-E30T

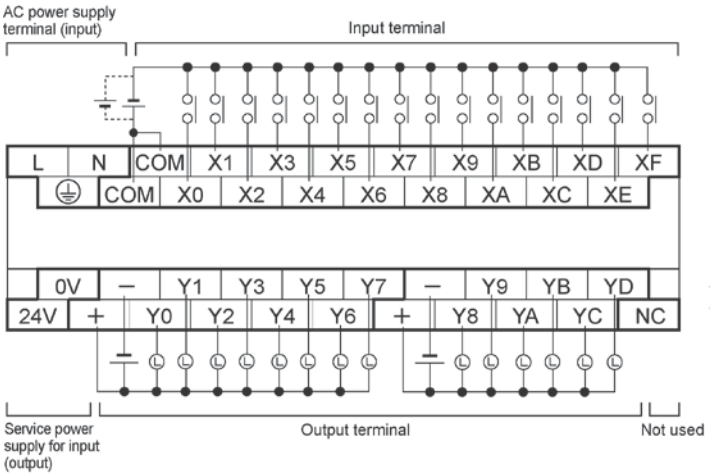

+, − (Left) : Power supply for Y0 to Y7
+, − (Right) : Power supply for Y8 to YD

Ramco National www.PanasonicSensors.com 1-800-280-6933

AFPX-E30P

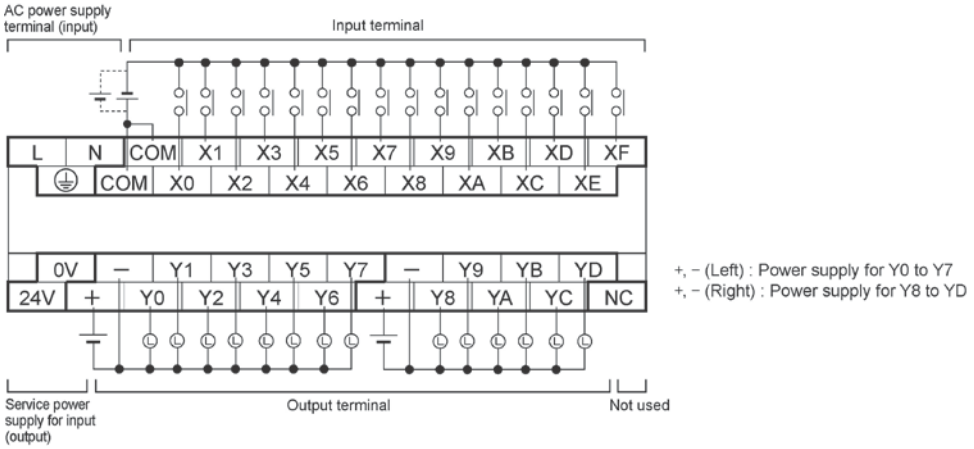

AFPX-E30TD

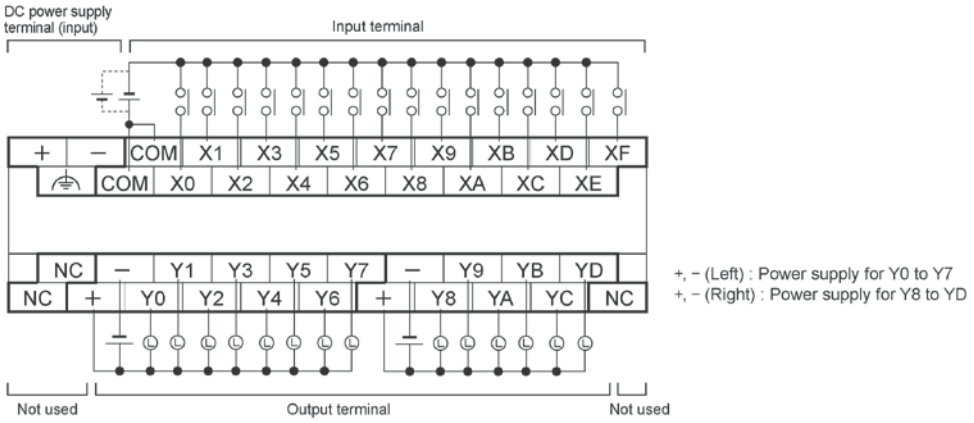

AFPX-E30PD

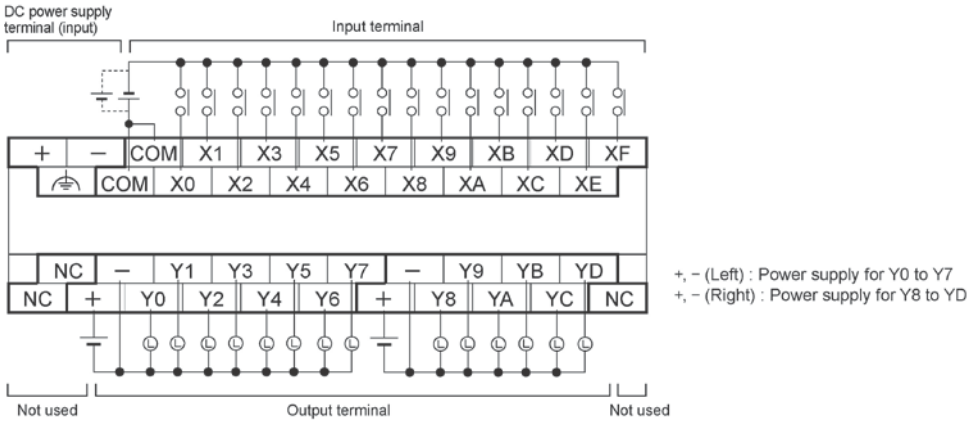

Input terminal:
Each COM terminal in the same terminal block is connected within the unit.
Output terminal:
Each COM terminal(CO, C1 …) of Ry type is separate.
Each power supply terminal of Tr type is separate. Use them in the range surrounded by the bold black lines.

Ramco National www.PanasonicSensors.com 1-800-280-6933

3.3 FP-X Expansion FP0 Adapter

3.3.1 Overview

For the FP-X, a maximum of 3 units of the FP0 expansion units (expansion I/O unit, intelligent unit) can be used using the expansion FP0 adapter.

All FP0 expansion unit can be used.
- DC input unit
- Transistor output unit
- Relay output unit
- Analog I/O unit
- Thermocouple unit
- Network unit

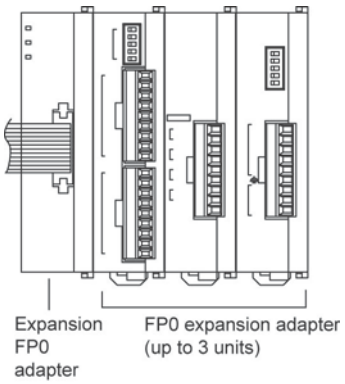

Note:
The expansion FP0 adapter does not function by itself. Always connect the FP0 expansion unit to it.

Ramco National www.PanasonicSensors.com 1-800-280-6933

3.3.2 Parts and Functions

FP-X expansion FP0 adapter (AFPX-EFP0)

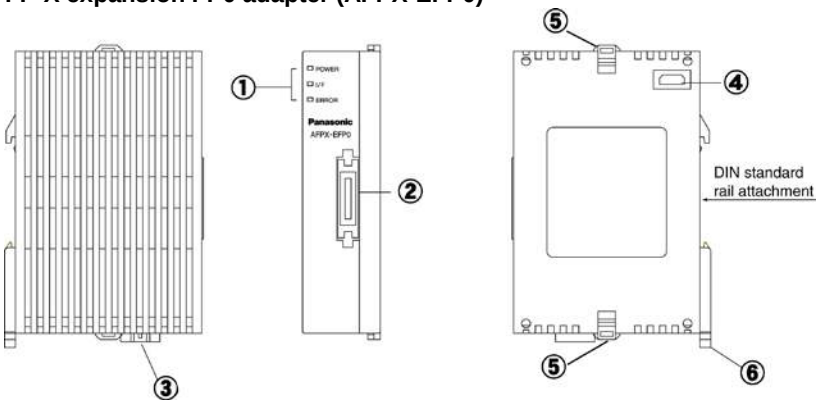

① Status indicator LEDs

LED		
POWER	**Green**	When the power of 24 V DC is supplied and the communication starts with the control unit, the LED lights. When the communication cannot be carried out, it goes out.
I/F	**Green**	When the communication starts with the control unit, the LED lights. When the communication cannot be carried out, it goes out. When the FP0 expansion unit is not connected, it flashes.
ERROR	**Red**	When an error occurs on the connection with the FP0 expansion unit, it flashes.

② FP-X expansion bus connector

Connects the FP-X control unit (or FP-X expansion unit). The provided expansion cable (AFPX-EC08) is used for the connection.

It is not necessary to specify the TERM (terminal) setting for the expansion FP0 adapter.

③ Power supply connector (24V DC)

Supply the power of 24 V DC. The provided power supply cable (AFP0581) is used for the connection.

Supply the power from the service power supply for the input of the FP-X control unit.

④ FP0 expansion connector

Connects the FP0 expansion unit.

⑤ Expansion hook

This hook is used to secure the FP0 expansion unit.

⑥ DIN rail attachment lever

This lever enables the expansion unit to attach to a DIN rail at a touch. The lever is also used for installation on the mounting plate slim type) (AFP0803).

General specifications

Item	Specifications
Rated voltage	24 V DC
Voltage regulation	21.6 to 26.4 V DC
Inrush current	20A or less (24 V DC, at 25 °C)
Fuse	Built-in (Replacement is not available)
Insulation system	Non-isolated
Power supply connector	3-pin connector (Power supply cable AFP0581 is provided.)

Ramco National www.PanasonicSensors.com 1-800-280-6933

Chapter 4

I/O Allocation

4.1 I/O Allocation

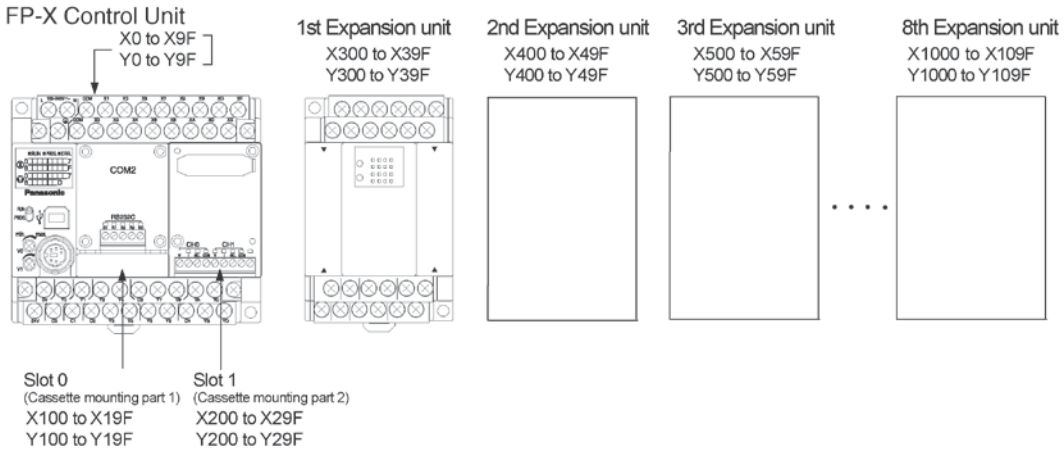

	Input	Output
Control unit	X0 to X9F (WX0 to WX9)	Y0 to Y9F (WY0 to WY9)
Cassette mounting part 1 (Slot 0)	X100 to X19F (WX10 to WX19)	Y100 to Y19F (WY10 to WY19)
Cassette mounting part 2 (Slot 1)	X200 to X29F (WX20 to WX29)	Y200 to Y29F (WY20 to WY29)
Expansion 1st unit	X300 to X39F (WX30 to WX39)	Y300 to Y39F (WY30 to WY39)
Expansion 2nd unit	X400 to X49F (WX40 to WX49)	Y400 to Y49F (WY40 to WY49)
Expansion 3rd unit	X500 to X59F (WX50 to WX59)	Y500 to Y59F (WY50 to WY59)
Expansion 4th unit	X600 to X69F (WX60 to WX69)	Y600 to Y69F (WY60 to WY69)
Expansion 5th unit	X700 to X79F (WX70 to WX79)	Y700 to Y79F (WY70 to WY79)
Expansion 6th unit	X800 to X89F (WX80 to WX89)	Y800 to Y89F (WY80 to WY89)
Expansion 7th unit	X900 to X99F (WX90 to WX99)	Y900 to Y99F (WY90 to WY99)
Expansion 8th unit	X1000 to X109F (WX100 to WX109)	Y1000 to Y109F (WY100 to WY109)

Note) The ranges of the I/O numbers which are actually used differ depending on the cassettes and units.

Regarding I/O number

• Specifying X and Y numbers

On the FP-X and the FP0, the same numbers are used for input and output.

• Expression of numbers for input/output relays

Input relay “X” and output relay “Y” are expressed as a combination of decimal and hexadecimal numbers as shown below.

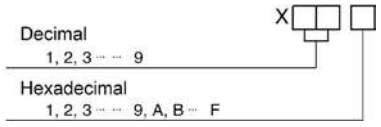

• Slot No.

Slot No. is the number indicating the installing position of the cassette which is used to generate programs by the add-on cassette.

Ramco National www.PanasonicSensors.com 1-800-280-6933

4.2 Allocation of FP-X Control Unit

The I/O allocation of FP-X control unit is fixed.

I/O numbers

Type of control unit	Number of allocation	I/O number
FP-X C14 control unit	Input (8 points)	X0 to X7
	Output (6 points)	Y0 to Y5
FP-X C30 control unit	Input (16 points)	X0 to XF
	Output (14 points)	Y0 to YD
FP-X C60 control unit	Input (32 points)	X0 to XF X10 to X1F
	Output (28 points)	Y0 to YD Y10 to Y1D

4.3 FP0 Expansion Unit Allocation

The FP-X expansion unit is installed on the right side of the FP-X control unit.

I/O numbers (when installed as the first expansion unit)

Type of expansion unit	Number of allocation	I/O number
FP-X E16 expansion I/O unit	Input (8 points)	X300 to X307
	Output (8 points)	Y300 to Y307
FP-X E30 expansion I/O unit	Input (16 points)	X300 to X30F
	Output (14 points)	Y300 to Y30D
FP-X E16X expansion input unit	Input (16 points)	X300 to X30F
FP-X E14YR expansion output unit	Output (14 points)	Y300 to Y30D

Note) E16 cannot be connected on the right side of E16.

Ramco National www.PanasonicSensors.com 1-800-280-6933

4.4 Allocation of FP0 Expansion Unit

4.4.1 I/O Allocation

The FP0 expansion unit is installed on the right side of the FP0 expansion adapter.
The I/O numbers are allocated from the unit nearest to the expansion FP0 adapter in ascending order.

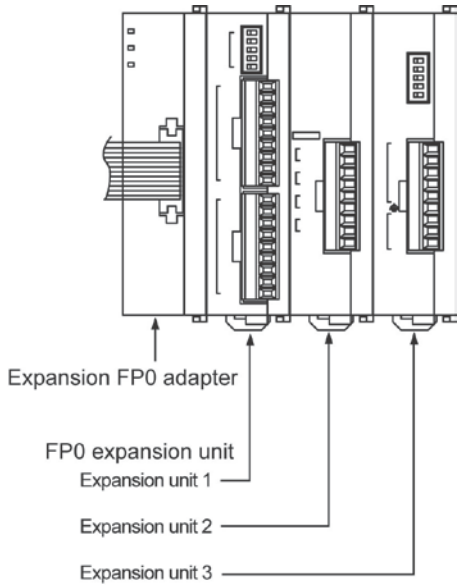

4.4.2 Number of Expansion Units and I/O Allocation

Only one expansion FP0 adapter can be connected at the last position of the FP-X expansion bus.
The I/O allocation varies depending on the installation location of the expansion FP0 adapter

Expansion location	Expansion unit 1	Expansion unit 2	Expansion unit 3
Expansion 1st unit	X300 to X31F	X320 to X33F	X340 to X35F
	Y300 to Y31F	Y320 to Y33F	Y340 to Y35F
Expansion 2nd unit	X400 to X41F	X420 to X43F	X440 to X45F
	Y400 to Y41F	Y420 to Y43F	Y440 to Y45F
Expansion 3rd unit	X500 to X51F	X520 to X53F	X540 to X55F
	Y500 to Y51F	Y520 to Y53F	Y540 to Y55F
Expansion 4th unit	X600 to X61F	X620 to X63F	X640 to X65F
	Y600 to Y61F	Y620 to Y63F	X640 to X65F
Expansion 5th unit	X700 to X71F	X720 to X73F	X740 to X75F
	Y700 to Y71F	Y720 to Y73F	Y740 to Y75F
Expansion 6th unit	X800 to X81F	X820 to X83F	X840 to X85F
	Y800 to Y81F	Y820 to Y83F	Y840 to Y85F
Expansion 7th unit	X900 to X91F	X920 to X93F	X940 to X95F
	Y900 to Y91F	Y920 to Y93F	Y940 to Y95F
Expansion 8th unit	X1000 to X101F	X1020 to X103F	X1040 to X105F
	Y1000 to Y101F	Y1020 to Y103F	Y1040 to Y105F

Note) The ranges of the I/O numbers which are actually used differ depending on the units.

Ramco National www.PanasonicSensors.com 1-800-280-6933

4.4.3 I/O Allocation of FP0 Expansion Unit

I/O do not need to be set as I/O allocation is performed automatically when an expansion unit is added. The I/O allocation of expansion unit is determined by the installation location.

I/O numbers (when installed as the first expansion unit)
Carry the digit of hundreds place one by one since the second expansion unit.

Type of unit		Number of allocation	Expansion unit 1	Expansion unit 2	Expansion unit 3
FP0 Expansion unit	FP0-E8X	Input (8 points)	X300 to X307	X320 to X327	X340 to X347
	FP0-E8R	Input (4 points)	X300 to X303	X320 to X323	X340 to X343
		Output (4 points)	Y300 to Y303	Y320 to Y323	Y340 to Y343
	FP0-E8YT/P FP0-E8YR	Output (8 points)	Y300 to Y307	Y320 to Y327	Y340 to Y347
	FP0-E16X	Input (16 points)	X300 to X30F	X320 to X32F	X340 to X34F
	FP0-E16R FP0-E16T/P	Input (8 points)	X300 to X307	X320 to X327	X340 to X347
		Output (8 points)	Y300 to Y307	Y320 to Y327	Y340 to Y347
	FP0-E16YT/P	Output (16 points)	Y300 to Y30F	Y320 to Y32F	Y340 to Y34F
	FP0-E32T/P	Input (16 points)	X300 to X30F	X320 to X32F	X340 to X34F
		Output (16 points)	Y300 to Y30F	Y320 to Y32F	Y340 to Y34F
FP0 analog I/O unit	FP0-A21	Input (16 points) CH0	WX30 (X300 to X30F)	WX32 (X320 to X32F)	WX34 (X340 to X34F)
		Input (16 points) CH1	WX31 (X310 to X31F)	WX33 (X330 to X33F)	WX35 (X350 to X35F)
		Output (16 points)	WY30 (Y300 to Y30F)	WY32 (Y320 to Y32F)	WY34 (Y340 to Y34F)
FP0 A/D conversion unit FP0 thermo-couple unit	FP0-A80 FP0-TC4 FP0-TC8	Input (16 points) CH0, 2, 4, 6	WX30 (X300 to X30F)	WX32 (X320 to X32F)	WX34 (X340 to X34F)
		Input (16 points) CH1, 3, 5, 7	WX31 (X310 to X31F)	WX33 (X330 to X33F)	WX35 (X350 to X35F)
FP0 RTD unit	FP0-RTD6	Input (16 points) CH0, 2, 4	WX2 (X20 to X2F)	WX4 (X40 to X4F)	WX6 (X60 to X6F)
		Input (16 points) CH1, 3, 5	WX3 (X30 to X3F)	WX5 (X50 to X5F)	WX7 (X70 to X7F)
		Output (16 points	WY2 (Y20 to Y2F)	WY4 (Y40 to Y4F)	WY6 (Y60 to Y6F)
FP0 D/A conversion unit	FP0-A04V FP0-A04I	Input (16 points)	WX30 (X300 to X30F)	WX32 (X320 to X32F)	WX34 (X340 to X34F)
		Output (16 points) CH0, 2	WY30 (Y300 to Y30F)	WY32 (Y320 to Y32F)	WY34 (Y340 to Y34F)
		Output (16 points) CH1, 3	WY31 (Y310 to Y31F)	WY33 (Y330 to Y33F)	WY35 (Y350 to Y35F)
FP0 I/O link unit	FP0-IOL	Input 32 points	X300 to X31F	X320 to X33F	X340 to X35F
		Output 32 points	Y300 to Y31F	Y320 to Y33F	Y340 to Y35F

- The data for the each channels of FP0 A/D conversion unit (FP0-A80), FP0 thermocouple unit (FP0-TC4/FP0-TC8) , FP0 RTD unit(FP0-RTD6) and FP0 D/A conversion unit (FP0-A04V/FP0-A04I) is converted and loaded with a user program that includes a switching flag to convert the data.
- Regarding FP0 CC-Link slave unit, please refer to the exclusive manual.

Ramco National www.PanasonicSensors.com 1-800-280-6933

4.5 I/O Allocation of FP-X Add-on Cassette

The FP-X add-on cassette is mounted on the FP-X control unit.

I/O numbers

Type of control unit			I/O No.	
			Cassette mounting part 1 Slot 0	Cassette mounting part 2 Slot 1
Communication cassette	FP-X communication cassette	AFPX-COM1	–	–
	FP-X communication cassette	AFPX-COM2	–	–
	FP-X communication cassette	AFPX-COM3	–	–
	FP-X communication cassette	AFPX-COM4	–	–
	FP-X communication cassette	AFPX-COM5	–	–
	FP-X communication cassette	AFPX-COM6	–	–
Application cassette	FP-X analog input cassette Note2)	AFPX-AD2	CH0 WX10 CH1 WX11	CH0 WX20 CH1 WX21
	FP-X analog output cassette	AFPX-DA2	CH0 WY10 CH1 WY11	CH0 WY20 CH1 WY21
	FP-X analog I/O cassette	AFPX-A21	CH0 WX10 CH1 WX11 WY10	CH0 WX20 CH1 WX21 WY20
	FP-X thermocouple cassette	AFPX-TC2	CH0 WX10 CH1 WX11	CH0 WX20 CH1 WX21
	FP-X RTD cassette	AFPX-RTD2	CH0 WX10 CH1 WX11	CH0 WX20 CH1 WX21
	FP-X input cassette	AFPX-IN8	From X100	From X200
	FP-X output cassette	AFPX-TR8	From Y100	From Y200
	FP-X output cassette	AFPX-TR6P	From Y100	From Y200
	FP-X I/O cassette	AFPX-IN4T3	From X100 From Y100	From X200 From Y200
	FP-X pulse I/O cassette Note3)	AFPX-PLS	From X100 From Y100	From X200 From Y200
	FP-X master memory cassette	AFPX-MRTC	–	–

Note1) There is no I/O for the communication cassette and master memory cassette.
Note2) Digital conversion values are K0 to 4000. As the resolution is 12 bits, upper 4 bits are always 0.
Note3) The pulse I/O cassette cannot be used with the Tr type.

Ramco National www.PanasonicSensors.com 1-800-280-6933

Chapter 5

Installation and Wiring

5.1 Installation

Be thoroughly familiar with the following contents before using the units to eliminate the causes which occur the failure or malfunction of each unit.

5.1.1 Installation Environment and Space

Operating environment (Use the unit within the range of the general specifications when installing)
*Ambient temperatures:0 ~ +55 ℃
*Ambient humidity: 10% to 95% RH (at 25°C, non-condensing)
*Keep the height below 2000m.
*For use in pollution Degree 2 environment.
*Do not use it in the following environments.
- Direct sunlight
- Sudden temperature changes causing condensation.
- Inflammable or corrosive gas.
- Excessive airborne dust, metal particles or saline matter.
- Benzine, paint thinner, alcohol or other organic solvents or strong alkaline solutions such as ammonia or caustic soda.
- Direct vibration, shock or direct drop of water.
- Influence from power transmission lines, high voltage equipment, power cables, power equipment, radio transmitters, or any other equipment that would generate high switching surges. (Min.100mm or less)

Static electricity
-Before touching the unit, always touch a grounded piece of metal in order to discharge static electricity.
-In dry locations, excessive static electricity can cause problems.

Measures regarding heat discharge
- Always install the unit orientated with the tool port facing outward on the bottom in order to prevent the generation of heat.

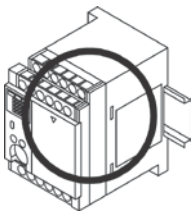

- Do not install the FP-X control unit as shown below.

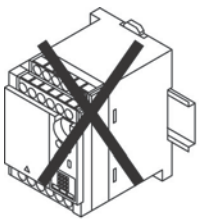

Upside-down

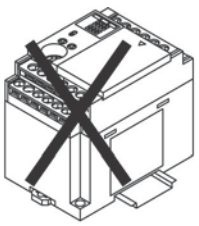

Horizontal installation of PLC main unit

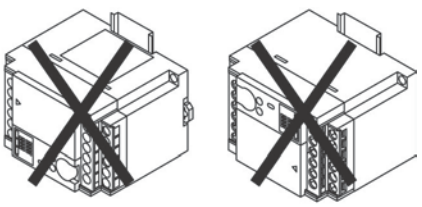

Installation getting the DIN rail upright

- Do not install the unit above devices which generate heat such heaters, transformers or large scale resistors.

Ramco National www.PanasonicSensors.com 1-800-280-6933

Installation space

- Leave at least 50mm of space between the wiring ducts of the unit and other devices to allow heat radiation and unit replacement.

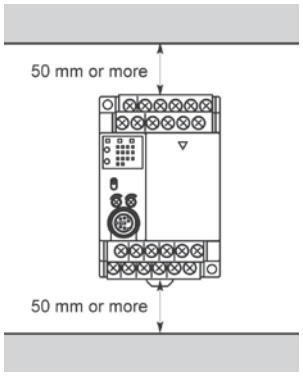

- Maintain at least 100mm of space between devices to avoid adverse affects from noise and heat when installing a device or panel door to the front of the PLC unit.

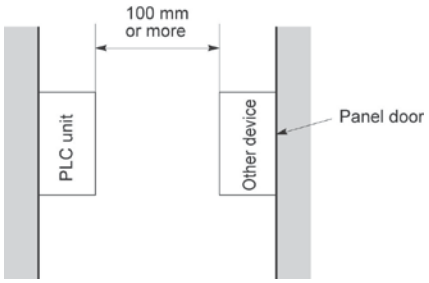

- Leave at least 100mm of space open from the front surface of the control unit in order to allow room for programming tool connections and wiring.

5.1.2 Installation and Removal

Attachment to DIN rail and removal from DIN rail

Can be simply attached to DIN rail.

Procedure of installation method

(1) Fit the upper hook of the unit onto the DIN rail.

(2) Without moving the upper hook, press on the lower hook to fit the unit into position.

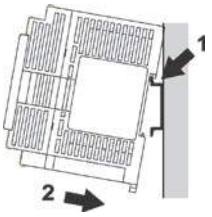

Procedure of removal method

(1) Insert a slotted screwdriver into the DIN rail attachment lever.

(2) Pull the attachment lever downwards.

(3) Lift up the unit and remove it from the rail.

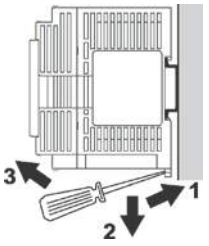

Ramco National www.PanasonicSensors.com 1-800-280-6933

Installation with screws

Use M4 size screws for the installation

Reference: For the information on the installation dimensions,
<13.1.4 Dimension Diagram for Installation

Installation and removal of the expansion FP0 adapter/FP0 expansion unit

Attachment to DIN rail and removal from DIN rail

Can be simply attached to DIN rail.

Procedure of installation method

(1) Fit the upper hook of the unit onto the DIN rail.

(2) Without moving the upper hook, press on the lower hook to fit the unit into position.

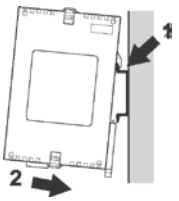

Procedure of removal method

(1) Insert a slotted screwdriver into the DIN rail attachment lever.

(2) Pull the attachment lever downwards.

(3) Lift up the unit and remove it from the rail.

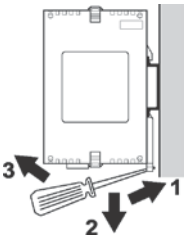

Installation Using the Optional Mounting Plate

When using the slim type mounting plate (AFP0803) (for mounting FP0)

Use M4 size pan-head screws for attachment of the slim type mounting plate and install according to the dimensions shown below.

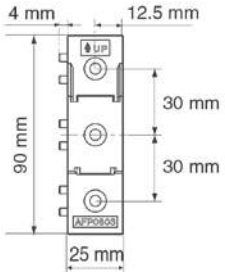

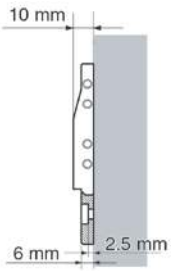

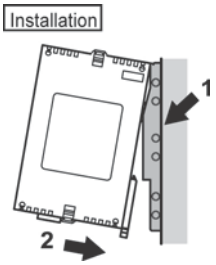

The rest of the procedure is the same as that for attaching the unit to the DIN rails.

Tighten the screws after joining all of the slim type mounting plate to be connected. Tighten the screws at each of the four corners.

[Example] **When two expansion units**

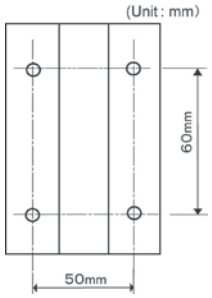

Ramco National www.PanasonicSensors.com 1-800-280-6933

5.2 Installation Using Expansion Cable

The FP-X expansion unit and the FP-X expansion FP0 adapter are connected to the control unit using the exclusive expansion cable.

-The expansion cable (AFPX-EC08) is packaged with the expansion unit and expansion FP0 adapter. (It can be purchased separately.) The expansion cables (AFPX-EC30 and AFPX-EC80) are sold separately.

Note:

-The total length of the expansion cables should be within 160 cm.

-When using the expansion cable (AFPX-EC30 or EC80), keep it away from the devices and wirings generating noises as much as possible.

Ramco National www.PanasonicSensors.com 1-800-280-6933

5.2.1 Expansion Method of FP-X Expansion Unit

1. Remove the expansion cover.

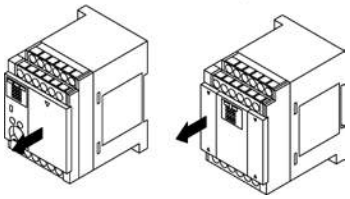

2. Fit the expansion connector cable into the expansion connector part of the control unit and the one (left side) of the expansion I/O unit.

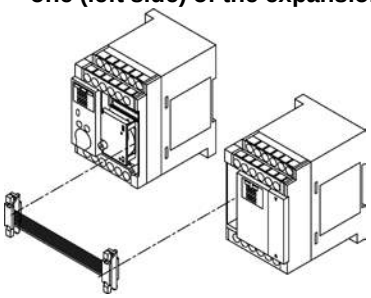

3. Push the expansion connector cable inside to touch the units each other.

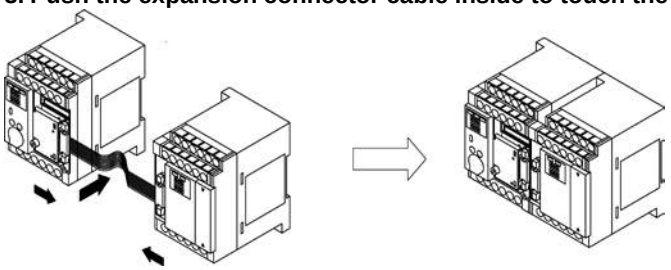

4. Set the terminator setting switch. All the switches of the expansion unit installed at the last position should be on.

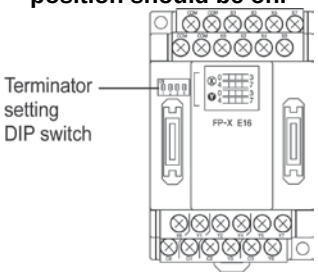

5. Install the expansion cover.

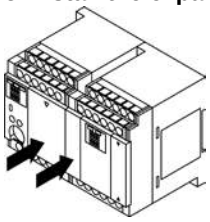

Ramco National www.PanasonicSensors.com 1-800-280-6933

5.2.2 How to Connect with FP-X Expansion FP0 Adapter

1. Remove the expansion cover.
There is no expansion cover for the expansion FP0 adapter.

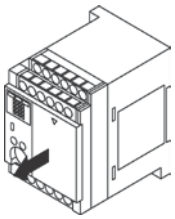

2. Fit the expansion connector cable into the expansion connector part.

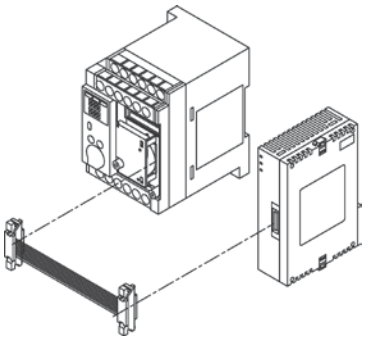

3. Push the expansion connector cable inside.

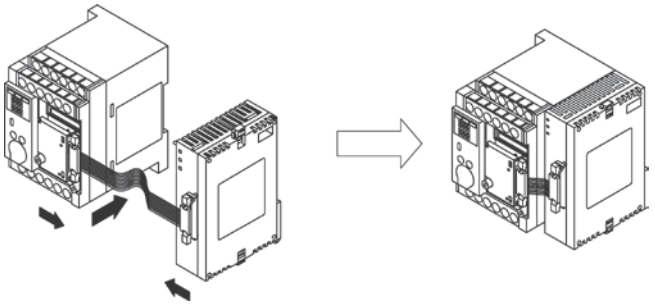

4. Install the expansion cover.

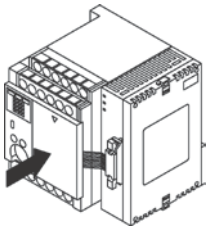

Note:
Although there is no terminator setting switch for the expansion FP0 adapter, the terminator setting has been done within the expansion FP0 adapter. Turn off the terminator setting switches of the other expansion units.

Ramco National www.PanasonicSensors.com 1-800-280-6933

5.3 Expansion Method of FP0 Expansion Unit

The FP0 expansion unit (expansion unit, intelligent unit) is expected by connecting to the right side of the FP-X expansion FP0 adapter.
Unit expansion is done using the right-side connector for FP0 expansion and expansion hook on the side of the unit.

1. Raise the expansion hooks on the top and bottom sides of the unit with a screwdriver.

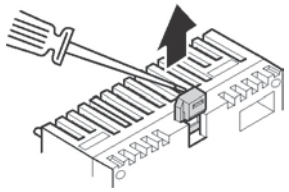

2. Align the pins and holes in the four corners of the control unit and expansion unit, and insert the pins into the holes so that there is no gap between the units.

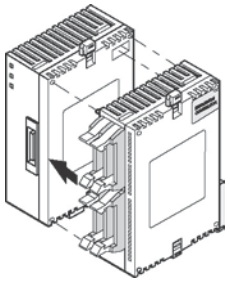

3. Press down the expansion hooks raised in step 1 to secure the unit.

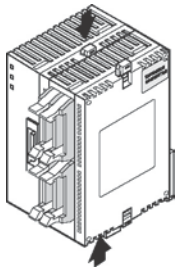

Ramco National www.PanasonicSensors.com 1-800-280-6933

5.4 How to Install Add-on Cassette

The add-on cassette is fitted with the control unit using the provided screws.

Note:

The add-on cassette must be secured with the control unit using the screws in the actual use for preventing the affect of vibrations.
The backup battery (option) should be before installing the add-on cassette.
The installation must be carried out when the power supply is off. If the power supply is on, it may cause faults.

Recommended screw

Recommended screw	Size and other conditions	Quantity
Tapping screw	Material: SW pan head (+) P-tight 2.6-16 galvanization, trivalent chromate (black)	2 pcs/1 cassette

5.4.1 Installing Communication Cassette

Note:

The communication cassette can be installed only in the cassette mounting part 1 of the control unit.

Installation on the control unit

Connect the connector on the back of the communication cassette and the connector of the cassette mounting part of the control unit, and secure the two positions, bottom left and top right, with the screws. It is no problem if the ribs remain. (AFPX-COM5 has no rib.)

The screw's tightening torque should be 0.3 to 0.5 N·m. Screw securely.

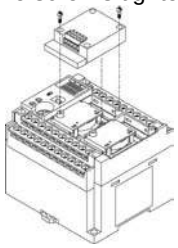

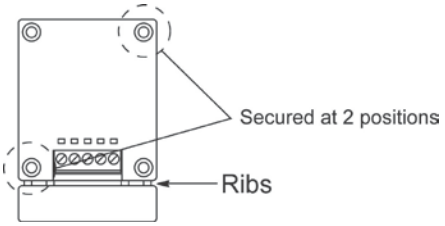

Installation on the application cassette

Remove the cover of the application cassette that was secured previously.
Connect the connector on the back of the communication cassette and the connector at the front of the application cassette, and secure the two positions, top left and bottom right of the communication cassette which the ribs were cut, with the screws. (AFPX-COM5 has no rib. Install it after the wiring of the application cassette.)

The screw's tightening torque should be 0.3 to 0.5 N·m. Screw securely.

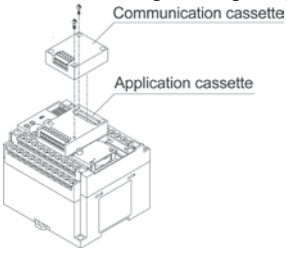

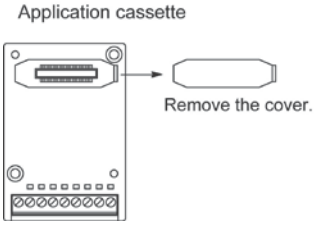

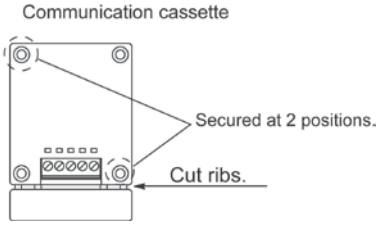

Ramco National www.PanasonicSensors.com 1-800-280-6933

5.4.2 Installing Application Cassette

Note:

The application cassette can be installed only in the cassette mounting part 1 and 2 of the control unit.

Installation on the control unit

Connect the connector on the back of the application cassette and the connector of the cassette mounting part of the control unit, and secure the two positions, bottom left and top right, with the screws.

The screw's tightening torque should be 0.3 to 0.5 N·m. Screw securely.

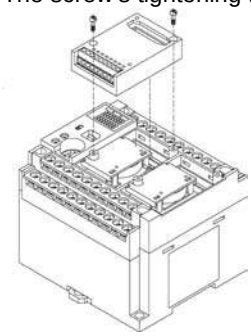

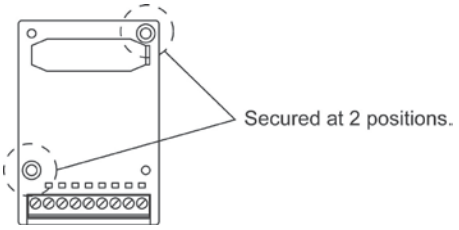

5.4.3 Precautions on Installation

Do not touch the back side of the add-on cassette and the connector.
The parts such as IC, etc. may be damaged by static electricity.

5.4.4 State When Add-on Cassette is Installed

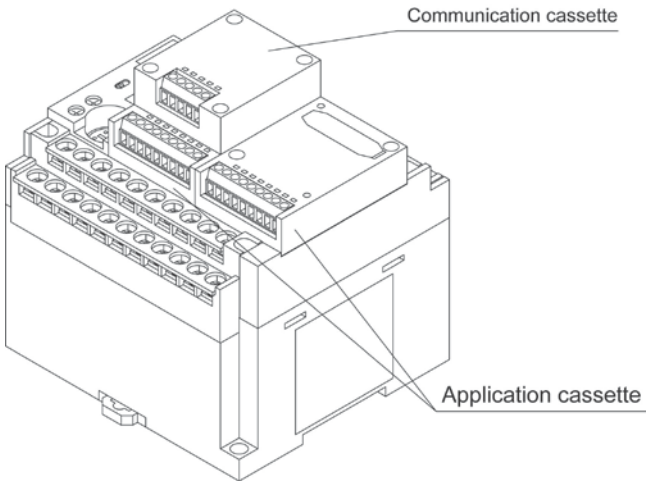

Ramco National www.PanasonicSensors.com 1-800-280-6933

5.5 Power Supply

5.5.1 AC Power Supply

Wiring of power supply

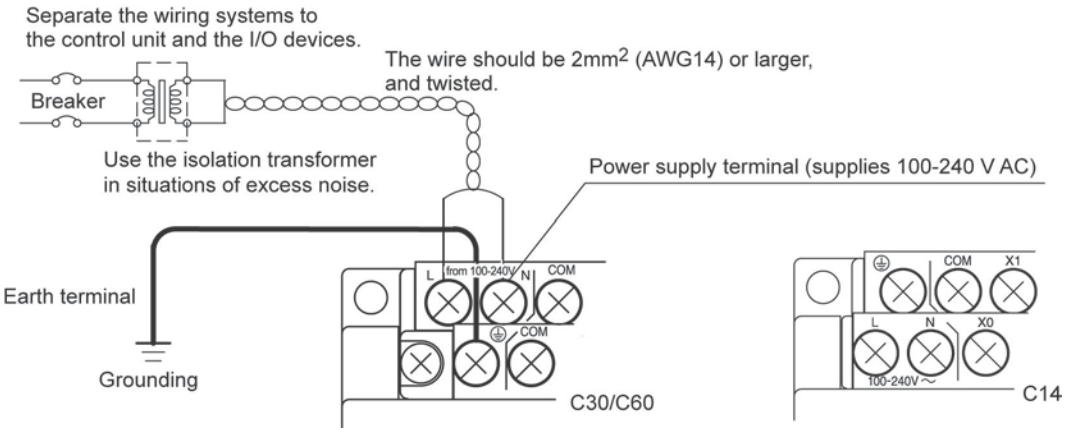

Confirm that the power supply voltage is within the allowable range of the power supply.

Rated input voltage	Allowable voltage amplitude range	Rated frequency	Allowable frequency range
100 to 240 V AC	85 to 264 V AC	50/60 Hz	47 to 63 Hz

Note:

Using the power supply of the outlying voltage and frequency, or using inappropriate wires may cause the fault of the power supply of the PLC.

Reference: <5.7 Wiring of Terminal Block>

Isolation of power supply systems

Isolate the wiring systems to the FP-X, output devices and mechanical power apparatus.

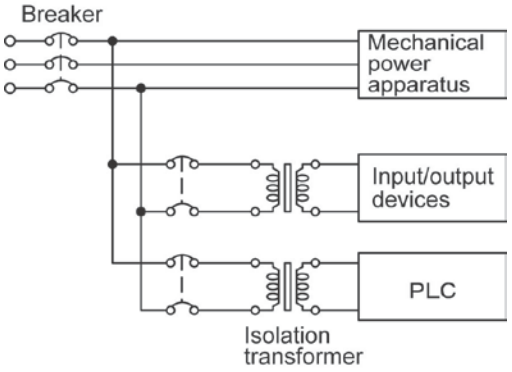

Ramco National www.PanasonicSensors.com 1-800-280-6933

Note: Power supply of the FP-X expansion units

Be sure to supply power to the FP-X expansion units and the control unit from the same power supply, and turn the power on and off simultaneously for both.

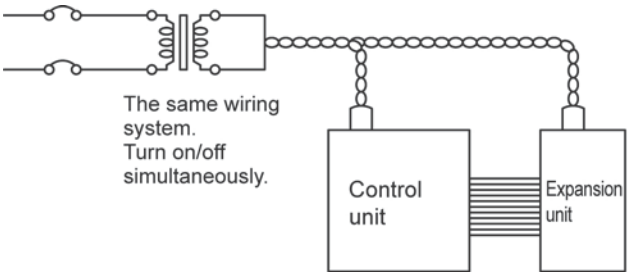

To avoid the influence of noises

Use the power supply causing less noise. The inherent noise resistance is sufficient for the noise superimposed on the power wires, however, the noise can be attenuated further by using the isolation transformer.

Also, twist the power supply cables to minimize adverse effects from noise.

Grounding

Ground the instrument to increase noise suppression.

Exclusive grounding

- For grounding purposes, use wiring with a minimum of 2 mm^2. The grounding connection should have a resistance of less than 100Ω.
- The point of grounding should be as close to the PLC unit as possible. The ground wire should be as short as possible.
- If two devices share a single ground point, it may produce an adverse effect. Always use an exclusive ground for each device.

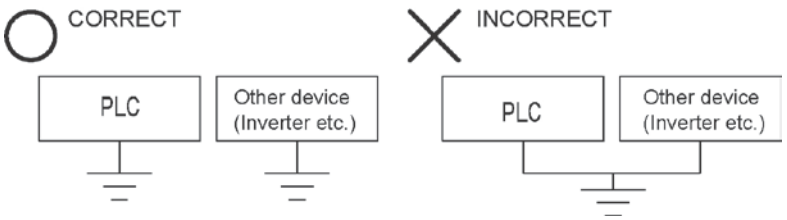

Ramco National www.PanasonicSensors.com 1-800-280-6933

5.5.2 DC Power Supply

Wiring of power supply

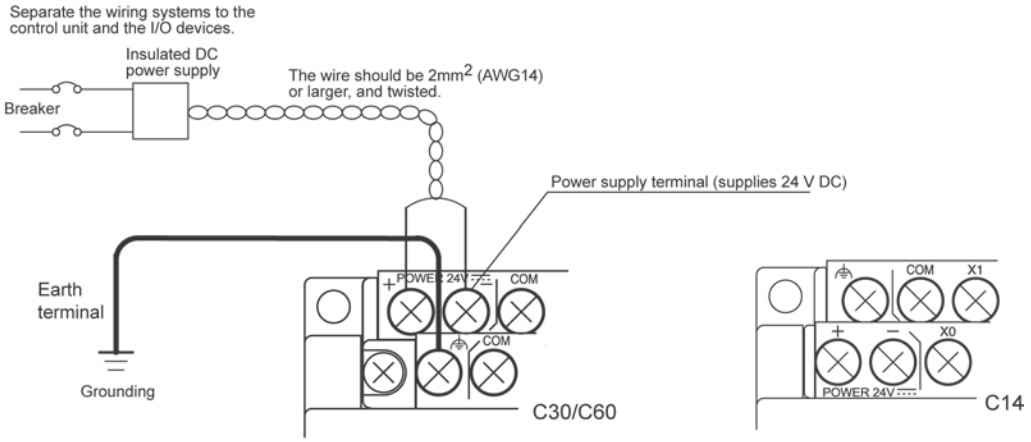

Confirm that the power supply voltage is within the allowable range of the power supply.

Rated input voltage	Allowable voltage amplitude range
24 VDC	20.4 to 28.8 VDC

Note:

Using the power supply of the outlying voltage, or using inappropriate wires may cause the fault of the power supply of the PLC.

Reference: <5.7 Wiring of Terminal Block>

Isolation of power supply systems

Isolate the wiring systems to the FP-X, output devices and mechanical power apparatus.

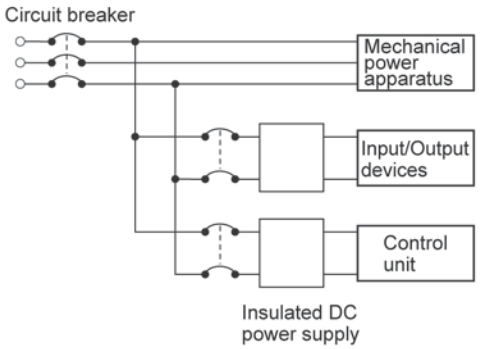

Ramco National www.PanasonicSensors.com 1-800-280-6933

Note: Power supply of the FP-X expansion units

Be sure to supply power to the FP-X expansion units and the control unit from the same power supply, and turn the power on and off simultaneously for both.

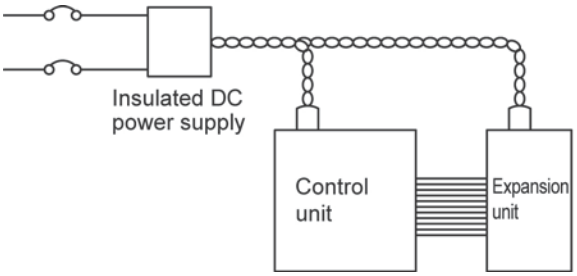

To avoid the influence of noises

Use the power supply causing less noise. The inherent noise resistance is sufficient for the noise superimposed on the power wires, however, the noise can be attenuated further by using the isolation transformer.

Also, twist the power supply cables to minimize adverse effects from noise.

Grounding

Ground the instrument to increase noise suppression.

Exclusive grounding

- For grounding purposes, use wiring with a minimum of 2 mm^2. The grounding connection should have a resistance of less than 100Ω.
- The point of grounding should be as close to the PLC unit as possible. The ground wire should be as short as possible.
- If two devices share a single ground point, it may produce an adverse effect. Always use an exclusive ground for each device.

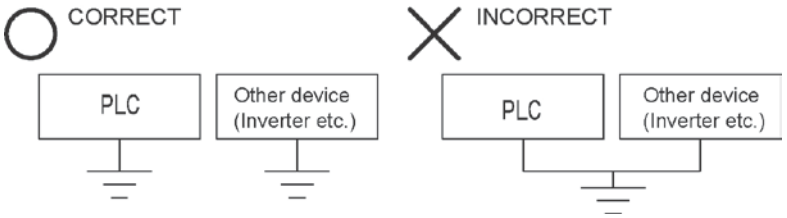

Ramco National www.PanasonicSensors.com 1-800-280-6933

5.5.3 Power Supply for Expansion FP0 Adapter

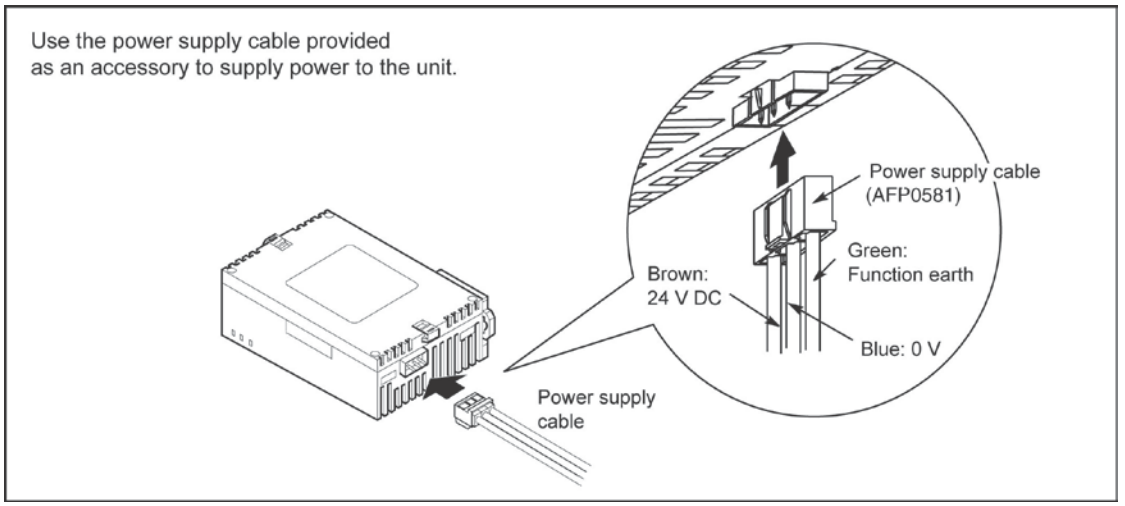

Power supply wiring for the unit

Use the power supply cable (Part No.:AFP0581) that comes with the unit to connect the power supply.

- Brown: 24V DC
- Blue: 0V
- Green: Function earth (FE)

Power supply wire

To minimize adverse effects from noise, twist the brown and blue wires of the power supply cable.

Power supply from the servicing power supply for the input of the FP-X control unit

- To protect the system against erroneous voltage from the power supply line, use an insulated power supply with an internal protective circuit (electric cable that reinforced insulation or double insulation has been made).
- The regulator on the unit is a non-insulated type.
- To turn the power supplies on simultaneously, supply the power for the expansion FP0 adapter from the servicing power supply for the input of the FP-X control unit.

Ramco National www.PanasonicSensors.com 1-800-280-6933

Measures regarding power supply sequence (start up sequence)

- To ensure and ease the power supply sequence of the expansion FP0 adapter, supply the power for the expansion FP0 adapter from the servicing power supply for the input of the FP-X control unit.
- The power supply sequence should be set up so that power to the FP0 expansion unit is turned on before the FP-X system power supply.
- The power supply sequence should be set up so that power to the FP-X system and FP0 expansion unit is turned off before the input/output power supplies. If the input/output power supplies are turned off before the power to the expansion FP0 adapter, the control unit will detect the input fluctuations and may begin an unscheduled operation.

When turning on:

Power supply for FP0 → Power supply for FP-X, Expansion FP0 adapter → Power supplies for I/O devices

When turning off:

Power supply for FP-X, Expansion FP0 adapter → Power supply for FP0 → Power supplies for I/O devices

Grounding

- In situations of excess noise

Under normal conditions, the inherent noise resistance is sufficient. However, in situations of excess noise, ground the instrument to increase noise suppression.

- Exclusive grounding

- The grounding connection should have a resistance of less than 100Ω.
- The point of grounding should be as close to the PLC unit as possible. The ground wire should be as short as possible.
- If two devices share a single ground point, it may produce an adverse effect. Always use an exclusive ground for each device.

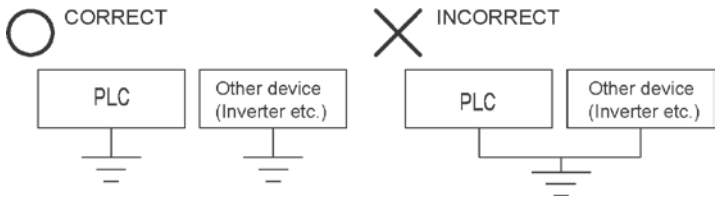

Note:

Depending on the surroundings in which the equipment is used, grounding may cause problems.

[Example]

Since the power supply line of the expansion FP0 adapter power supply connector is connected to the function earth through a varistor, if there is an irregular potential between the power supply line and earth, the varistor may be shorted.

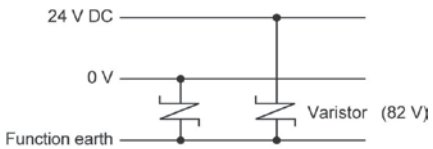

Expansion FP0 adapter power supply line

Ramco National www.PanasonicSensors.com 1-800-280-6933

5.6 Wiring of Input and Output

Do not apply the voltage that exceeds the rated input voltage to the input terminal.

5.6.1 Input Wiring

Connection of photoelectric sensor and proximity sensor

Relay output type

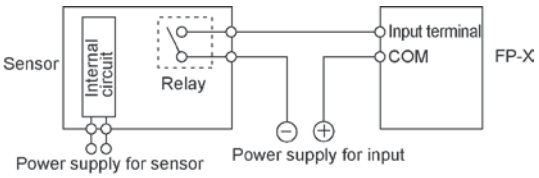

NPN open collector output type

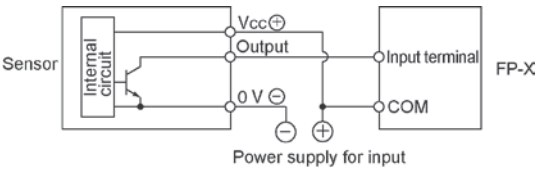

Voltage output type

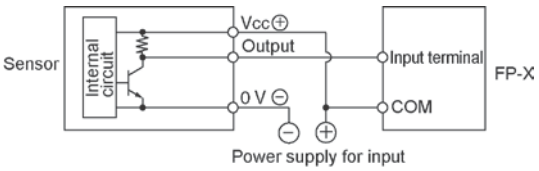

Two-wire output type

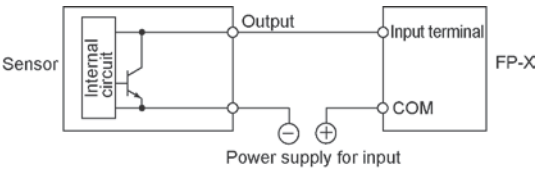

Precaution when using LED-equipped lead switch

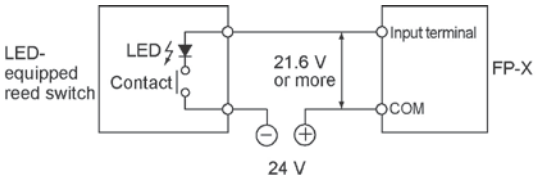

When a LED is connected in series to an input contact such as LED-equipped lead switch, make sure that the on voltage applied to the PLC input terminal is greater than 21.6V DC. In particular, take care when connecting a number of switches in series.

Precaution when using two-wire type sensor

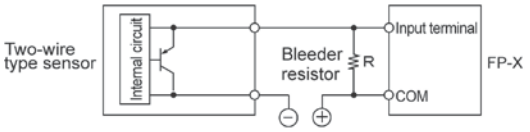

I : Sensor's leakage current (mA)
R : Bleeder resistor (kΩ)

The off voltage of the input is 2.4 V, therefore, select the value of bleeder resistor "R" so that the voltage between the COM terminal and the input terminal will be less than 2.4 V. The input impedance is 5.6 kΩ.

$$I \times \frac{5.6R}{5.6 + R} \leqq 2.4$$ Therefore,

$$R \leqq \frac{13.44}{5.6I - 2.4} (k\Omega)$$

The wattage W of the resistor is:

$$W = \frac{(\text{Power supply voltage})^2}{R}$$

In the actual selection, use a value that is 3 to 5 times the value of W.

If the input of PLC does not turn off because of leakage current from the two-wire type sensor “photoelectric sensor or proximity sensor”, the use of a bleeder resistor is recommended, as shown below.

The formula is based on an input impedance of 5.6kΩ. The input impedance varies depending on the input terminal number.

Ramco National www.PanasonicSensors.com 1-800-280-6933

Precaution when using LED-equipped limit switch

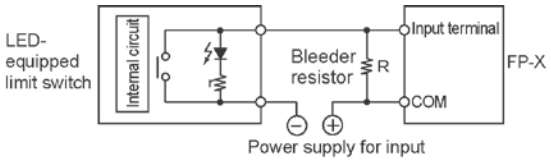

If the input of PLC does not turn off because of the leakage current from the LED-equipped limit switch, the use of a bleeder resistor is recommended, as shown below.

r: Internal resistor of limit switch (kΩ)
R : Bleeder resistor (kΩ)

The off voltage of input is 2.4 V, therefore when the power supply voltage is 24 V, select the bleeder resistor "R" so that

The current will be greater than $I = \frac{24-2.4}{r}$

The resistance R of the bleeder resistor is:

$$R \leqq \frac{13.44}{5.6 \times I - 2.4} \ (k\Omega)$$

The wattage W of the resistor is:

$$W = \frac{(\text{Power supply voltage})^2}{R} \times (3 \text{ to } 5 \text{ times})$$

Servicing power supply for input

Use it for input and the expansion FP0 adapter. (Use an external power supply for the FP0 expansion unit.)

When it is used for another device, confirm the consumption current of the device side before it is connected. If excess current is being supplied for a long time, the power supply may be damaged.

5.6.2 Output Wiring

Do not connect a load that exceeds the maximum switching ability to the output terminal.

Protective circuit for inductive loads

- With an inductive load, a protective circuit should be installed in parallel with the load.
- When switching DC inductive loads with relay output type, be sure to connect a diode across the ends of the load.

When using an AC inductive load

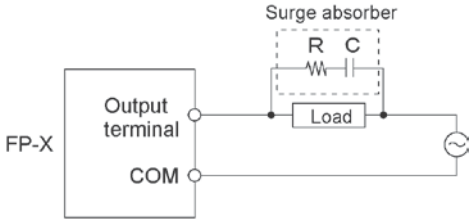

Example of surge absorber:
Resistance(R): 50 Ω
Capacity(C) : 0.47 μF

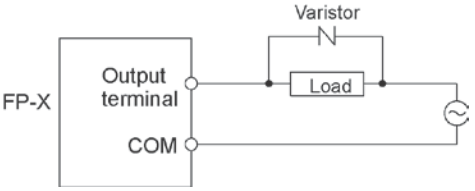

Ramco National www.PanasonicSensors.com 1-800-280-6933

When using a DC inductive load

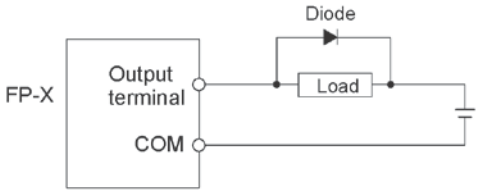

Diode:
Reverse voltage: 3 times the load voltage
Averag rectified torward current: Load current or more

Precautions when using capacitive loads

When connecting loads with large in-rush currents, to minimize their effect, connect a protection circuit as shown below.

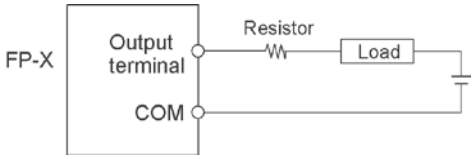

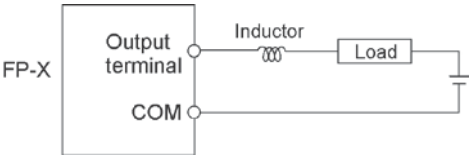

5.6.3 Precautions Regarding Input and Output Wirings

Isolate input/output/power lines

- Be sure to select the thickness (dia.) of the input and output wires while taking into consideration the required current capacity.
- Arrange the wiring so that the input and output wiring are separated, and these wirings are separated from the power wiring, as much as possible. Do not route them through the same duct or wrap them up together.
- Separate the input/output wires from the power and high voltage wires by at least 100mm.
- Wirings other than the above specifications or incorrect wirings may cause the fault or malfunction.

Others

- Wiring should be carried out after the power supply to the PLC was turned off.
- Also turn of the power supply when the control unit, expansion units and various cassettes are connected. If they are connected during the power supply is on, it may cause the fault or malfunction.

Ramco National www.PanasonicSensors.com 1-800-280-6933

5.7 Wiring of Terminal Block

Supplied terminal block/Suitable wires

M3 terminal screws are used for the terminal. The following suitable solderless terminals are recommended for the wiring to the terminals

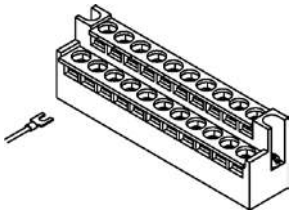

●Fork type terminal

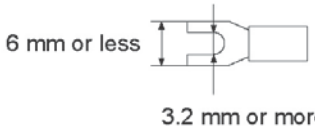

●Round type terminal

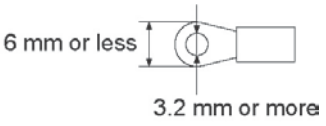

Suitable solderless terminals

Manufacturer	Shape	Part No.	Suitable wires (mm^2)
JST Mfg. Co., Ltd.	Round type	1.25-MS3	0.25 to 1.65
	Fork type	1.25-B3A	
	Round type	2-MS3	1.04 to 2.63
	Fork type	2-N3A	

Suitable wires

Suitable wires	Tightening torque
AWG22 to 14	0.3 to 2.0 mm^2

The tightening torque should be 0.5 to 0.6 N·m

Connection to the terminal block

When using the round type terminal, remove the terminal cover.

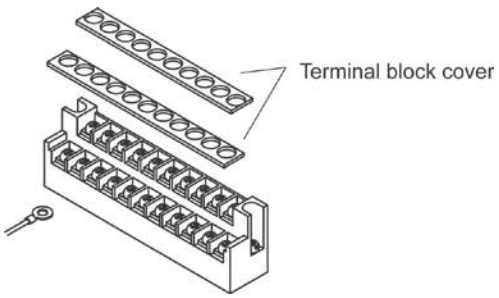

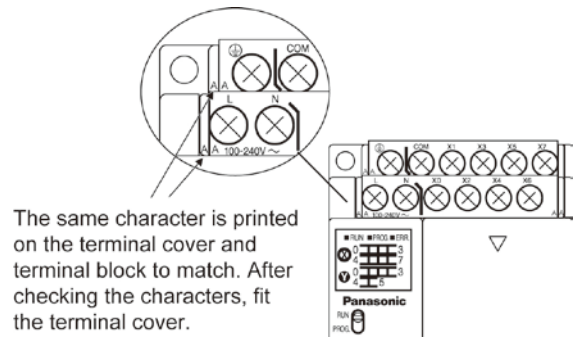

Note:

Install the terminal block cover as it was after wiring to prevent electric shock.

Ramco National www.PanasonicSensors.com 1-800-280-6933

How to remove the terminal block

The terminal blocks used for C30/C60/E30 can be removed for fitting the screws.
(The terminal block for C14/E16 cannot be removed.)

●Removal

Slacken the mounting screws in 2 positions. The terminal block will be floated gradually and removed.

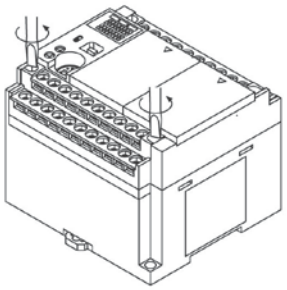

As the mounting screws are fixed at the terminal block, they are not come off even after the terminal block was removed from the main unit.

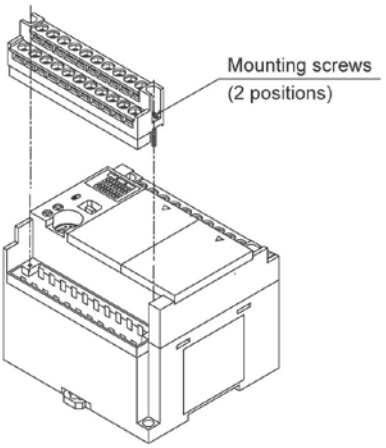

●Installation

Screw down from the state that the terminal block is floating.
The terminal block will be secured by being pushed with the screws.

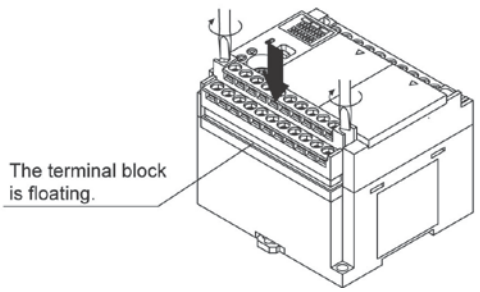

The tightening torque should be 0.25 to 0.35 N•m.

Ramco National www.PanasonicSensors.com 1-800-280-6933

5.8 Wiring of Add-on Cassette Terminal Block

A screw-down connection type for terminal block is used for the add-on cassette. The suitable wires are given below.

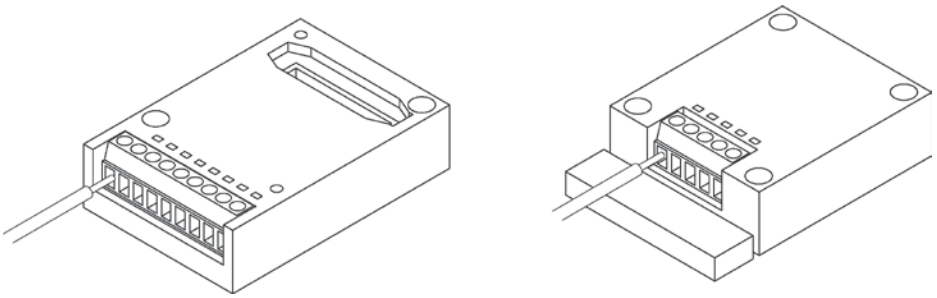

Suitable wires (twisted)

Size	Nominal cross-sectional area
AWG #28 to 16	0.08 to 1.00 mm^2

Pole terminal with a compatible insulation sleeve

If a pole terminal is being used, the following models manufactured by Phoenix Contact Co. should be used.

Manufacturer	Cross-sectional area (mm^2)	Size	Part No.	
			With insulating sleeve	Without insulating sleeve
Phoenix Contact Co.	0.25	AWG #24	AI 0, 25-6 BU	A 0,25-7
	0.34	AWG #22	AI 0,34-6TQ	A 0, 34-6
	0.50	AWG #20	AI 0,5-6WH	A 0, 5-6

Pressure welding tool for pole terminals

Manufacturer	Part No.	Product No.
Phoenix Contact Co.	CRIMPFOX 6T-F	1212038

For tightening the terminal block

When tightening the terminals of the terminal block, use a screwdriver (Phoenex Contact Co. Product No. 1205037) with a blade size of 0.4 × 2.5 (Part No. SZS 0,4×2,5).

The tightening torque should be 0.22 to 0.25 N·m.

Ramco National www.PanasonicSensors.com 1-800-280-6933

Wiring method

(1) Remove a portion of the wire's insulation.

(2) Insert the wire into the terminal block until it contacts the back of the block socket, and then tighten the screw clockwise to fix the wire in place. (Tightening torque: 0.22 to 0.25 Name)

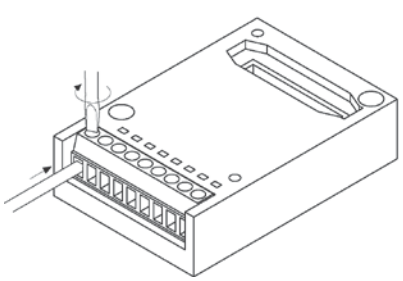

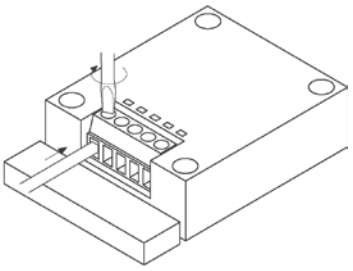

Precautions on wiring

- When removing the wire's insulation, be careful not to scratch the core wire.
- Do not twist the wires to connect them.
- Do not solder the wires to connect them. The solder may break due to vibration.
- After wiring, make sure stress is not applied to the wire.
- In the terminal block socket construction, if the wire closes upon counter-clockwise rotation, the connection is faulty. Disconnect the wire, check the terminal hole, and then re-connect the wire.
- If two wires are connected to the plus terminal and minus terminal of the RS485, use the wires of the same cross-sectional area which is 0.5 mm^2.

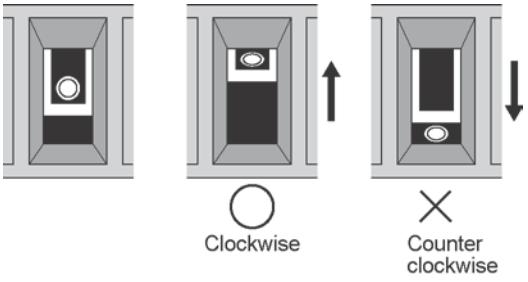

5.8.1 Transmission Cables

Please use the following cables for systems using the communication cassette.

Appropriate electrical cables (twisted cables)

Type	Cross-sectional view	Conductor		Insulator		Cable diam.	Sample appropriate cable
		Size	Resist-ance (at 20°C)	Material	Thick-ness		
Shielded twisted pair		0.5 mm^2 (AWG20)	Max. 33.4 Ω/km	Polye-thylene	Max. 0.5 mm	Approx. 7.8 mm	Belden 9207 Hitachi Cable, Ltd. KPEV-S0.5 mm^2 x 1P
VCTF		0.5 mm^2 (AWG20)	Max. 37.8 Ω/km	Polychlo-rinated biphenyl	Max. 0.6 mm	Approx. 6.2 mm	VCTF-0.5 mm^2 x 2C(JIS)
Shielded multicore cable		0.3 mm^2 (AWG22) or greater	Max. 58.8 Ω/km	Vinyl chloride	Max. 0.3 mm	Approx. 6.6 mm	Onamba Co., Ltd. ONB-D6 x 0.3 mm^2

Note:

- Use shielded twisted pair cables.
- Use only one type of transmission cable. Do not mix more than 1 type.
- Twisted pair cables are recommended in noisy environments.
- When using shielded cable with crossover wiring for the RS485 transmission line, grounded one end.
- If two wires are connected to the plus terminal and minus terminal of the RS485, use the wires of the same cross-sectional area which is 0.5 mm^2.

Ramco National www.PanasonicSensors.com 1-800-280-6933

5.9 Handling of Backup Battery

5.9.1 What Backup Battery Does

Install an optional backup battery when the hold area is insufficient in the initial state or for using the clock/calender function.

Areas backed up with the battery

Classification		Hold area when battery is not installed		Hold area when battery is installed
Operation memory	Timer and counter	C1008 to C1023		Hold areas or non-hold areas can be specified arbitrarily by setting the system registers No.6 to No.13 using a programming tool. (All points can be also held.)
	Timer and counter Elapsed value area	EV1008 to EV1023		
	Internal relay	R2480 to R255F		
	Data register	C14	DT12230 to DT12284	
		C30/C60	DT32710 to DT32764	
	Step ladder	None		
	Link relay	None		
	Link register	None		
Special data register	Clock/calender	None		All points

Type of backup battery (Sold separately)

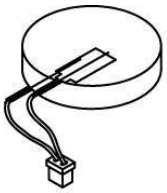

Name: Battery
Product No.: AFPX-BATT

Installable number of batteries

As for FP-X, the installable number of batteries varies depending on the types of the control unit.

【C14】

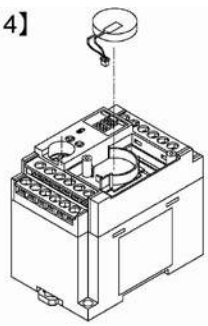

【C30】

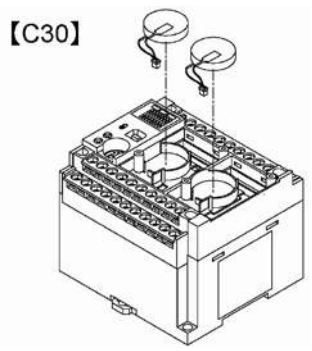

【C60】

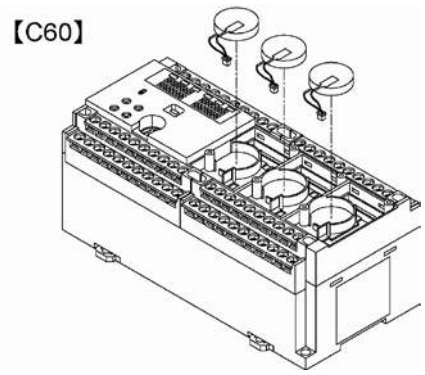

Ramco National www.PanasonicSensors.com 1-800-280-6933

5.9.2 Settings of Battery Error Alarm and Hold Area

Setting of the battery error alarm

- Setting the battery error alarm enables you to monitor the remaining backup battery level. By default, the battery error alarm is set to off in the system register settings. For using the battery, check the box of the system register No.4 "Alarm Battery Error" of the control unit.

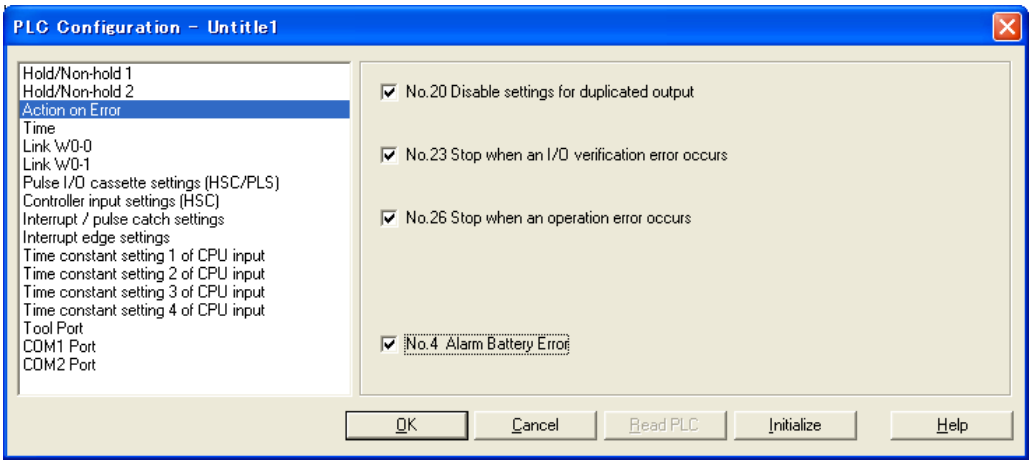

Settings of Hold area/Non-hold area

- The settings of the operation memory area such as data registers and system registers No.6 to No.14 are necessary.

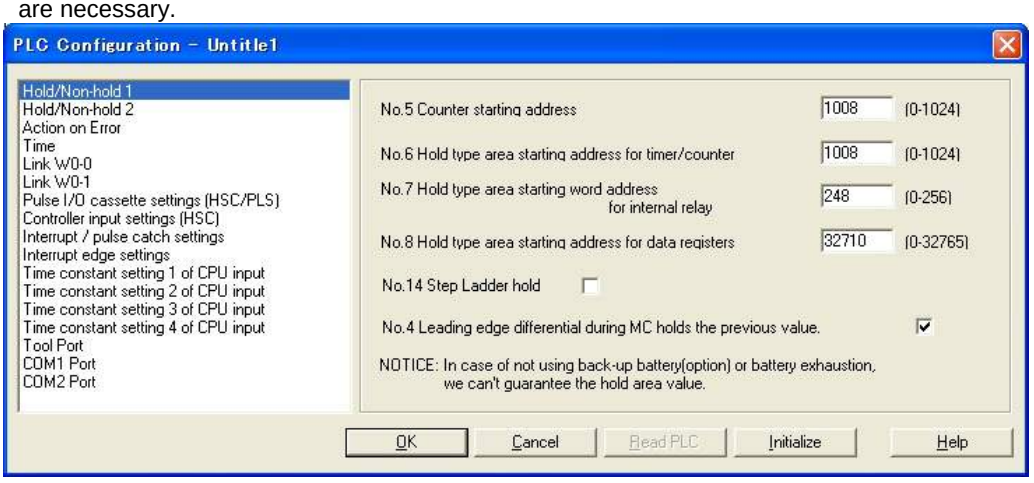

Note:

- When "Battery Error Alarm" is not set, the ERR.LED will not flash even if a battery error is detected. Note that data may be lost as the result of the battery shutoff.
- The setting of the system registers Nos. 6 to 14 is effective only when the backup battery is mounted.
- Without the battery, use at the default settings. If changing the settings, the “Hold/Non-hold” operation becomes unstable.

Ramco National www.PanasonicSensors.com 1-800-280-6933

5.9.3 Replacement of Backup Battery

The procedure for replacing the backup battery is as follows.

Procedure

1. Supply power to the control unit for more than five minutes.
Charge the built-in capacitor to retain the contents of the memory during the replacement of the battery.

2. Turn off the power supply.

3. Remove the battery cover using a tool such as a screwdriver.

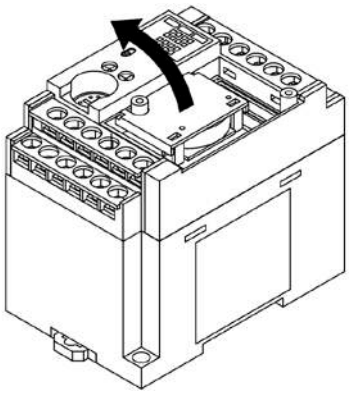

4. Remove the used battery.

5. Install a new battery within two minutes after turning off the power.
Place the battery to fit into the guide section of the control unit and connect the connector.

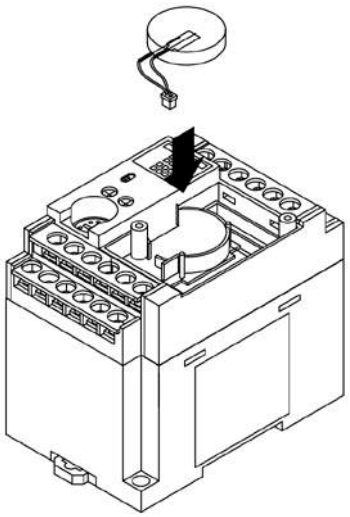

6. Install the battery cover and expansion cover.

Note:

- If the power is not sufficiently supplied or it takes too much time to replace the battery, retained memory data may be lost.

Ramco National www.PanasonicSensors.com 1-800-280-6933

5.9.4 Lifetime and Time for Replacement of Backup Battery

Battery lifetime: when the master memory cassette (AFPX-MRTC) is installed

Type of control unit	Number of installed batteries	Battery lifetime	Suggested replacement interval
C14	1 pc	2.1 years or more	3 years
C30	1 pc	1.8 years or more	3 years
	2 pcs	3.7 years or more	5 years
C60	1 pc	1.8 years or more	3 years
	2 pcs	3.7 years or more	5 years
	3 pcs	5.6 years or more	8 years

Note1) The battery lifetime is the value when no power at all is supplied.
Note2) Note that the lifetime may be shorter than the typical lifetime depending on the use conditions.
Note3) The battery is used for the battery detection circuit even when power is supplied.

Battery lifetime: when the master memory cassette (AFPX-MRTC) is not installed

Type of control unit	Number of installed batteries	Battery lifetime	Suggested replacement interval
C14	1 pc	3.3 years or more	5 years
C30	1 pc	2.7 years or more	4 years
	2 pcs	5.4 years or more	8 years
C60	1 pc	2.7 years or more	4 years
	2 pcs	5.4 years or more	8 years
	3 pcs	8.1 years or more	12 years

Note1) The battery lifetime is the value when no power at all is supplied.
Note2) Note that the lifetime may be shorter than the typical lifetime depending on the use conditions.
Note3) The battery is used for the battery detection circuit even when power is supplied.

Detection of battery error and time for replacement

- Special internal relays R9005 and R9006 will go on if the battery voltage drops. Create a program to announce errors to the outside as necessary. Two seconds after starting supplying power, the battery voltage is checked.
- When the system register No.4 "Battery Error Alarm" is enabled, the ERR.LED of the control unit will flash.
- Although data will be retained for about a week after the detection of battery error without power, the battery should be replaced as soon as possible.

Note:

- If a week has passed without power after the special internal relays R9005 and R9006 turned on or the ERR.LED flashed, retained memory data may be lost.
- Regardless of how much time has passed after the detection of battery error, supply power to the control unit for more than two minutes before replacing the battery.
- Special internal relays R9005 and R9006 will be on when a battery error is detected regardless of the setting of system register No.4.

Ramco National www.PanasonicSensors.com 1-800-280-6933

5.10 Safety Measures

5.10.1 Safety Measures

Precautions regarding system design
In certain applications, malfunction may occur for the following reasons:

- Power on timing differences between the PLC system and input/output or mechanical power apparatus.
- Response time lag when a momentary power drop occurs.
- Abnormality in the PLC unit, external power supply, or other devices.

In order to prevent a malfunction resulting in system shutdown choose the adequate safety measures listed in the following:

Interlock circuit
When a motor clockwise/counter-clockwise operation is controlled, provide an interlock circuit externally.

Emergency stop circuit
Provide an emergency stop circuit to the PLC externally to turn off the power supply of the output device.

Start up sequence
The PLC should be operated after all of the outside devices are energized. To keep this sequence, the following measures are recommended:

- Turn on the PLC with the mode selector set to the PROG. mode, and then switch to the RUN mode.
- Program the PLC so as to disregard the inputs and outputs until the outside devices are energized.

Note) In case of stopping the operation of the PLC also, have the input/output devices turned off after the PLC has stopped operating.

Grounding
When installing the PLC next to devices that generate high voltages from switching, such as inverters, do not ground them together. Use an exclusive ground for each device.

The terminal block cover must be used for preventing electric shock.

5.10.2 Momentary Power Failures

Operation of momentary power failures
If the duration of the power failure is less than 10 ms, the FP-X continues to operate. If the power is off for 10 ms or longer, operation changes depending on the combination of units, the power supply voltage, and other factors. (In some cases, operation may be the same as that for a power supply reset.)
Although the duration of the power failure for the expansion FP0 adapter is 10 ms, judge the permissible time as a system after confirming the permissible duration of the power failures for the DC power supply that supplies power to the expansion FP0 adapter. (Supply the power to it from the servicing power supply for the input of the FP-X control unit.) When the expansion unit that has a power supply built-in (E30 expansion FP0 adapter), depending on the duration of the momentary power failure, only one unit may be without electricity momentarily and the I/O verify error may occur. In that case, turn off the power supply and then turn on again.

5.10.3 Protection of Output Sections

Protection of output
If current exceeding the rated control capacity is being supplied in the form of a motor lock current or a coil shorting in an electromagnetic device, a protective element such as a fuse should be attached externally.

Ramco National www.PanasonicSensors.com 1-800-280-6933

Chapter 6

Tool Port and USB Port

6.1 Tool Port and USB Port

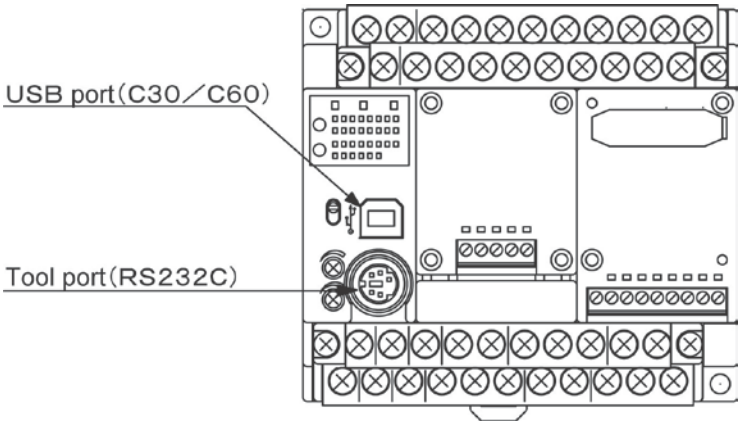

Tool port (RS232C)

This port is used to connect a programming tool.

A commercial mini-DIN 5-pin connector is used for the Tool port on the control unit.

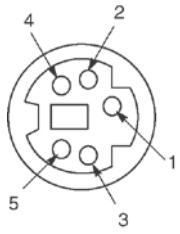

Pin No.	Signal name	Abbreviation	Signal direction
1	Signal Ground	SG	–
2	Send Data	SD	Unit → External device
3	Receive Data	RD	Unit ← External device
4	(Not used)	–	–
5	+5V	+5V	Unit → External device

The followings are the default settings set when the unit is shipped from the factory.

- Baud rate …..... 9600 bps
- Character bit …. 8 bit
- Parity check ….. Odd parity
- Stop bit length .. 1 bit

USB connector

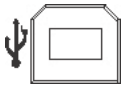

The connector is the commercial B type.

This is a connector to connect the programming tool.
Commercial USB cables (AB type) can be used.

Ramco National www.PanasonicSensors.com 1-800-280-6933

6.2 Functions of Tool Port

6.2.1 Tool Port

With the tool port, the FP-X offers two different communication modes as below.

Computer link

- Computer link is used for communication with a computer connected to the PLC. Instructions (command messages) are transmitted to the PLC, and the PLC responds (sends response messages) based on the instructions received.
- A proprietary MEWNET protocol called MEWTOCOL-COM is used to exchange data between the computer and the PLC. There are two different communication methods, 1:1 and 1:N communication. A 1:N network is called a C-NET. The maximum of 99 FP-X units can be connected with one personal computer.
- The PLC answers automatically to the commands received from the computer, so no program is necessary on the PLC side in order to carry out communication.

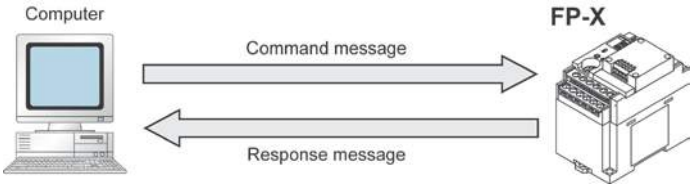

General-purpose serial communication

- With general-purpose serial communication, data can be sent back and forth between an image processing device connected to the COM. port and an external device such as a bar code reader.
- Reading and writing of data is done using a ladder program in the FP-X, while reading and writing of data from an external is handled through the data registers.
- It is available only in the RUN mode. The computer link mode is automatically selected in the RPOG mode so that the tool etc. can be connected.

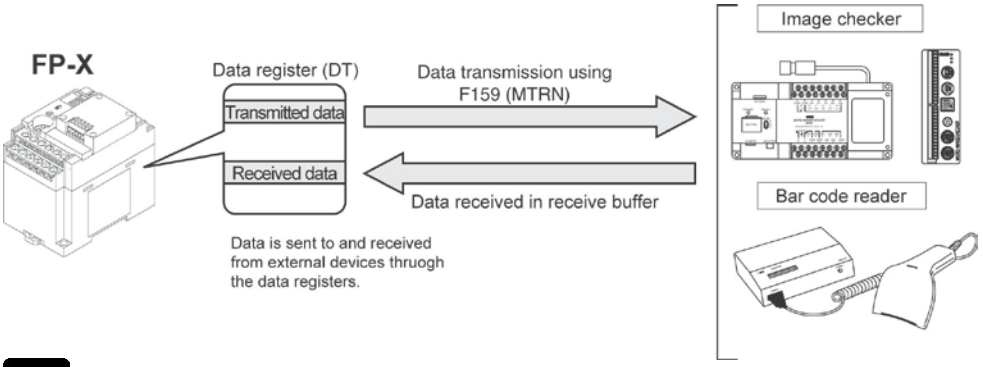

Note:

- The data received before changing to the PROG mode remain in the data registers. Execute the F159 (MTRN) instruction right after the mode was changed to the RUN mode and clear them.

Ramco National www.PanasonicSensors.com 1-800-280-6933

6.2.2 Tool Port Setting

Setting communication parameters in the computer link mode

Setting for Baud rate and communication format

The settings for baud rate and communication format of the tool port are entered using the FPWIN GR. Select “Options” in the menu bar, and then select “PLC Configuration”. Double-click “Tool Port”.

Dialog box of PLC system register setting

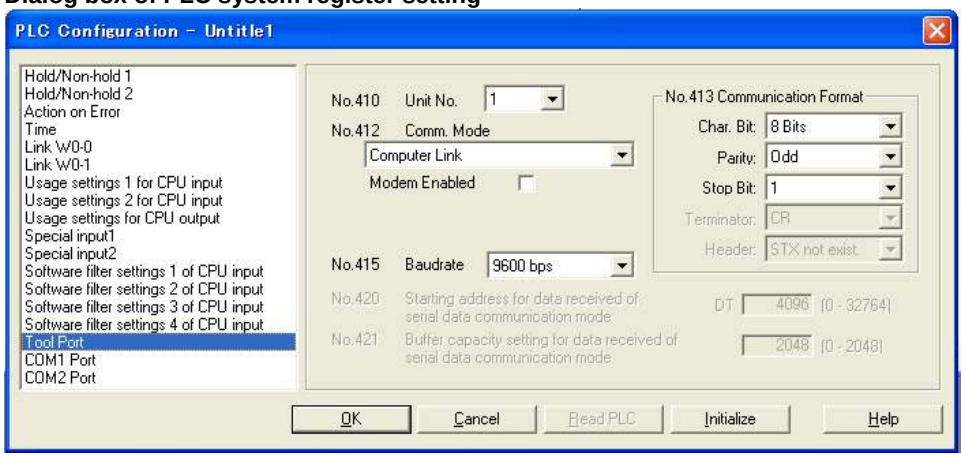

No. 410 unit number

The unit number can be set within a range of 1 to 99.

No. 412 Communication mode

Select the tool port operation mode:

Click on ▼, and select “Computer Link”.

No. 413 Communication Format setting

Default setting:

Char. Bit ..... 8 bits

Parity ..... Odd

Stop Bit ..... 1 bit

Terminator ..... Cannot be specified

Header ..... Cannot be specified

To change the communication format to match an external device connected to the tool port, enter the settings for the various items. (The terminator and the header cannot be changed.)

No. 415 Baud rate setting

The default setting for the baud rate is 9600 bps. Change the value to match the external device connected to the tool port:

Click on ▼, and select one of the values from 2400, 4800, 9600, 19200, 38400, 57600 and 115200 bps.

Ramco National www.PanasonicSensors.com 1-800-280-6933

Setting communication parameters in the general-purpose serial communication mode

By default, the tool port is set to “Computer link”. System register settings should be entered for the following items.

The settings for baud rate and communication format are made using the FPWIN GR programming tool. Select “Options” in the menu bar, and then select “PLC Configuration”. Click “Tool Port”.

Dialog box of PLC system register setting

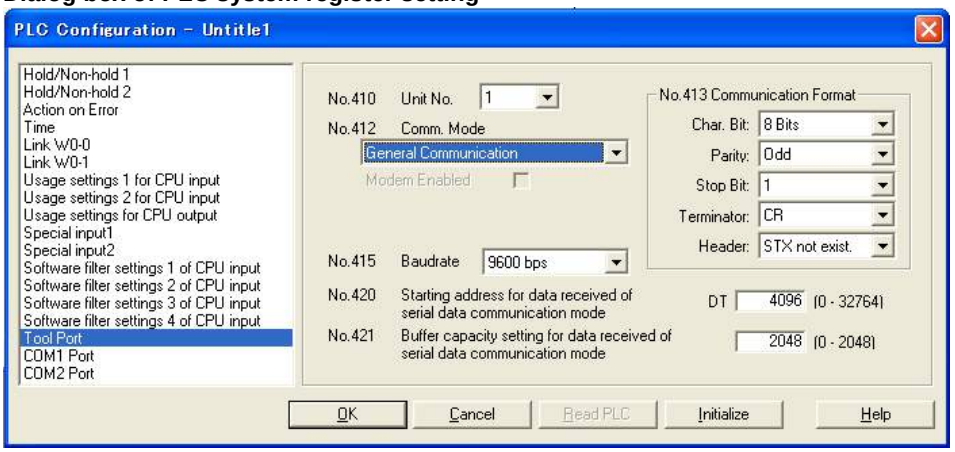

No. 412 Communication Mode

Select the tool port operation mode:

Click on ▼, and select “General Communication”.

No. 413 Communication Format setting

Default setting:

Char. Bit …… 8 bits

Parity …… Odd

Stop Bit …… 1 bit

Terminator …… CR

Header …… STX not exist

To change the communication format to match an external device connected to the tool port, enter the settings for the various items.

No. 415 Baud rate setting

The default setting for the baud rate is 9600 bps. Change the value to match the external device connected to the tool port:

Click on ▼, and select one of the values from 2400, 4800, 9600, 19200, 38400, 57600 and 115200 bps.

No. 420 Starting address for data received in general-purpose communication mode

No. 421 Buffer capacity setting for data received in general-purpose communication mode

To use general-purpose serial communication, the receive buffer must be specified. To change this area, specify the starting address using system register no. 420 and the volume (number of words) using no. 421. The receive buffer layout is shown below.

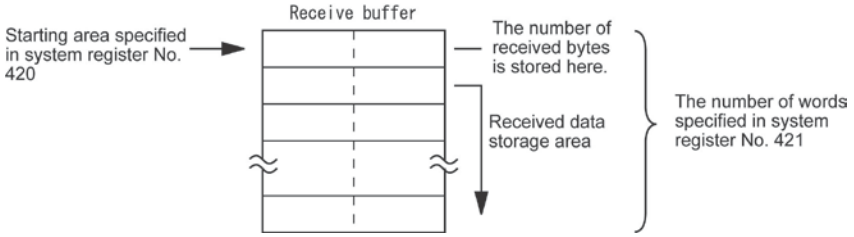

Ramco National www.PanasonicSensors.com 1-800-280-6933

6.3 USB Port

6.3.1 Functions of USB Port

With the USB port, the FP-X offers one communication mode as below.

Computer link

- Computer link is used for communication with a computer connected to the PLC. Instructions (command messages) are transmitted to the PLC, and the PLC responds (sends response messages) based on the instructions received.
- A proprietary MEWNET protocol called MEWTOCOL-COM is used to exchange data between the computer and the PLC. There are two different communication methods, 1:1 and 1:N communication. A 1:N network is called a C-NET. The maximum of 99 FP-X units can be connected with one personal computer.
- The PLC answers automatically to the commands received from the computer, so no program is necessary on the PLC side in order to carry out communication.

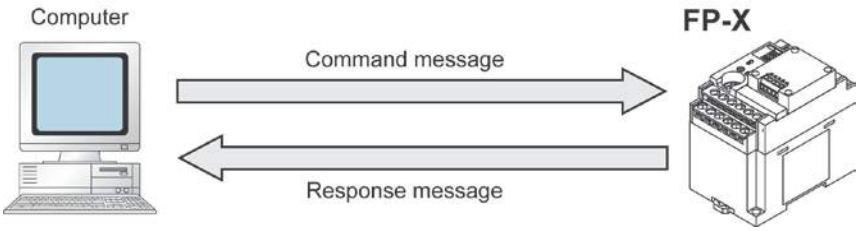

Ramco National www.PanasonicSensors.com 1-800-280-6933

6.3.2 USB Port Setting

Setting communication parameters in the computer link mode
Setting for Baud rate and communication format
The settings for baud rate and communication format of the tool port are entered using the FPWIN GR. Select “Options” in the menu bar, and then select “PLC Configuration”. Click “COM2 Port”.

Key Point:
The default setting is “Internal USB” for the port selection so that the setting is not necessary unless the default setting has not been changed.

Dialog box of PLC system register setting

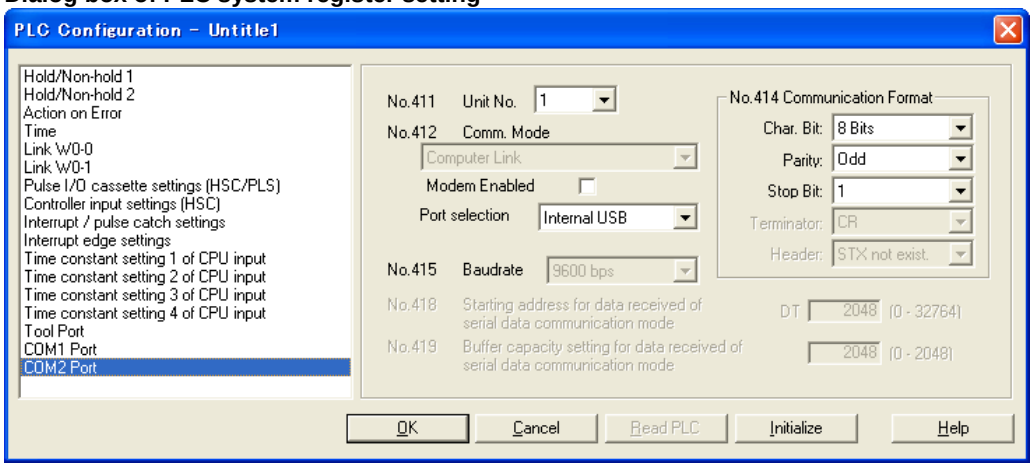

No. 411 unit number
The unit number can be set within a range of 1 to 99.

No. 412 Communication mode
Select “Internal USB” for the port selection. The communication mode is "Computer Link".

No. 414 (for COM2 port) Communication Format setting
Default setting:
Char. Bit ..... 8 bits
Parity ..... Odd
Stop Bit ..... 1 bit
Terminator ..... CR (fixed)
Header ..... No STX (fixed)

To change the communication format to match an external device connected to the USB (COM2) port, enter the settings for the various items.

No. 415 Baud rate setting
The baud rate is fixed at 115200 bps.

Restrictions
The USB (COM2) port supports all the commands of the MEWTOCOL-COM.
There is no restriction.

Ramco National www.PanasonicSensors.com 1-800-280-6933

6.3.3 USB Connection

The FP-X C30 control unit and C60 control unit is equipped with the USB connector. Connecting the units with a personal computer using the USB cable enables the communication with our software such as FPWIN GR. (The FP-X C14 control unit is not equipped with the USB connector.)

It is a communication method that uses the USB as a virtual serial port, so that the FP-X connected with the USB is treated from the PC as that it is connected via the COM port.
(Note that the USB is equivalent to the serial port.)

Necessary items for the connection
About PC
The PC with the following OS is necessary to connect the FP-X with the USB.

Windows®98 Second Edition
Windows®Me
Windows®2000
Windows®XP

Note: The FP-X cannot be connected with the USB cable when using Windows®95.

About programming tool
The following programming tool is necessary.

Relay type	**Transistor type**
FPWIN GR: Ver. 2.50 or later version	**FPWIN GR: Ver. 2.70 or later version**

About USB cable
A commercial cable is necessary.

Cable for SUB 2.0 (or 1.1) (AB type) Max. 5 m

Ramco National www.PanasonicSensors.com 1-800-280-6933

6.3.4 USB Connection Procedure

This procedure should be performed only once for the first connection. It is not necessary to do it from the next time.
However, the communication setting must be changed when switching between the USB connection and the tool port connection.

6.3.5 Installation of FPWIN GR

Install the FPWIN GR (Relay type: Ver. 2.50 or later version) (Transistor type: Ver.2.70 or later version) before connecting the FP-X with a PC.

Note:
Do not connect the FP-X to a PC with the USB cable before the FPWIN GR is installed or during the installation.
If they are connected, the USB driver will not be installed correctly.
Reference: <6.3.9 Reinstallation of USB Driver>

Reference:
For the information on the installation of the FPWIN GR, <FPWIN GR Ver. 2 Operation Guide Book ARCT1F332>

Ramco National www.PanasonicSensors.com 1-800-280-6933

6.3.6 Installation of USB Driver

Following 2 USB drivers must be installed to recognize the USB.

- **USB driver**
- **USB-COM conversion driver**

The installation procedures differ depending on the OS in the PC to be used.

Note:

For the PC with more than one connectors, it may be requested to reinstall these 2 drivers if the positions of the USB connecters are changed. In that case, reinstall the drivers.

With Windows® XP

1. Turn on the power supply of the FP-X, and connect the FP-X with a PC using the USB cable.

2. After the connection, the PC recognize the USB driver automatically. As the following message is shown, select “No, not this time”, and click “Next”.

Note) This display is not be shown with Windows®XP SP1.

Ramco National www.PanasonicSensors.com 1-800-280-6933

3. The next message is shown. Select “Install the software automatically”, and click “Next”.

4. The installation of the USB driver starts.
Although an alert for the Windows logo testing is indicated during the installation, click “Continue Anyway” to continue the installation.

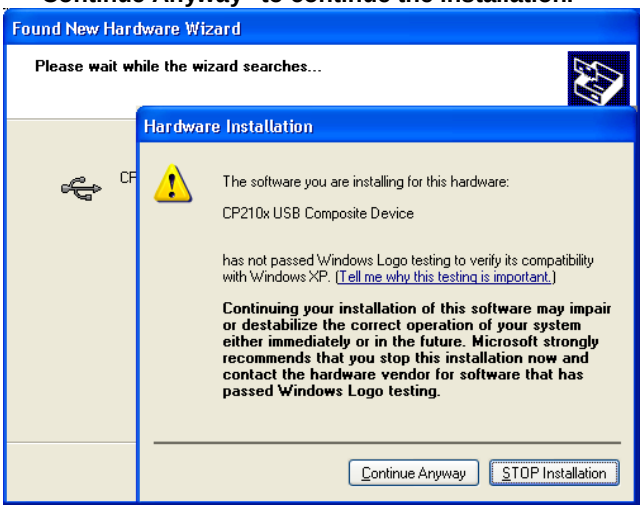

5. The next message is shown and the installation of the USB driver completes. Click “Finish”.

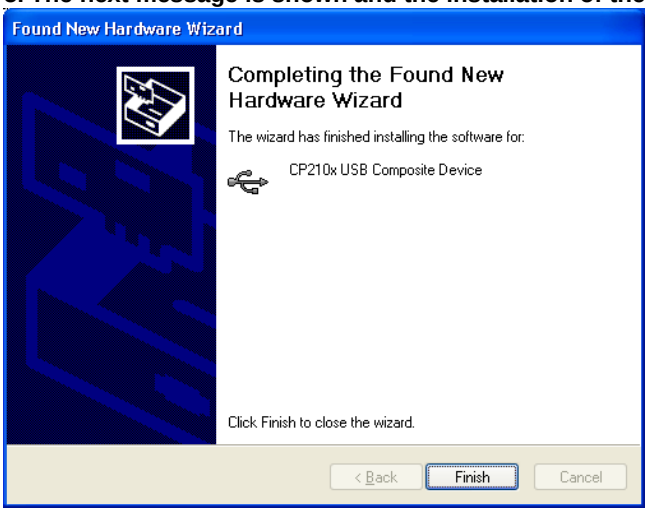

6. After that, the PC recognizes the USB-COM conversion driver automatically. As the next message is shown, select “No, not this time”, and click “Next”.

Note) This display is not be shown with Windows®XP SP1.

Ramco National www.PanasonicSensors.com 1-800-280-6933

7. The next message is shown. Select “Install the software automatically”, and click “Next”.

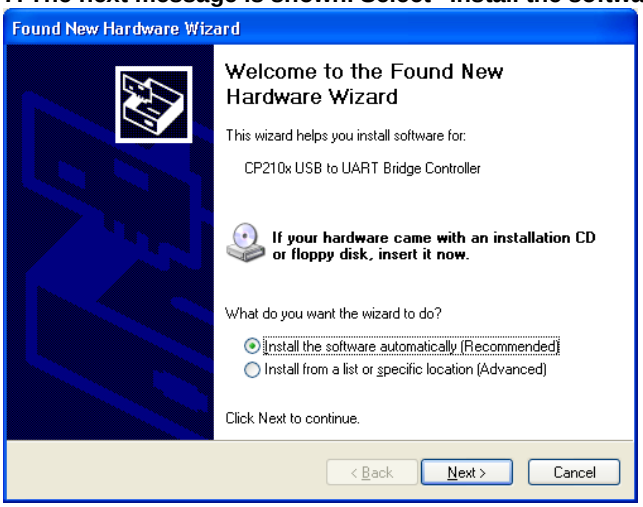

8. The installation of the USB driver starts.
Although an alert for the Windows logo testing is indicated during the installation, click “Continue Anyway” to continue the installation.

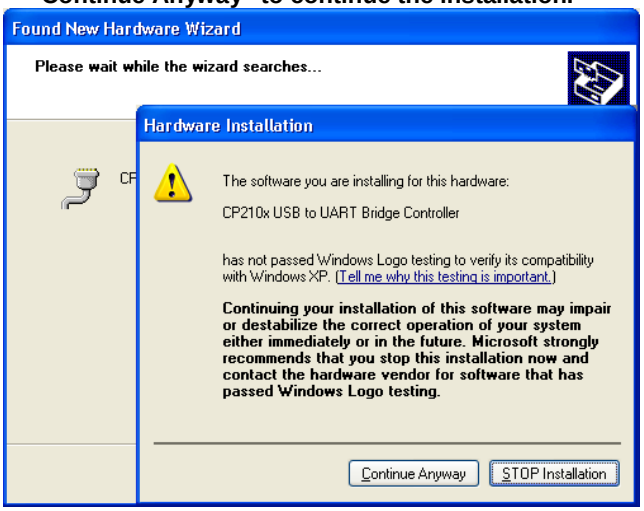

9. The next message is shown and the installation of the USB-COM conversion driver completes. Click “Finish”.

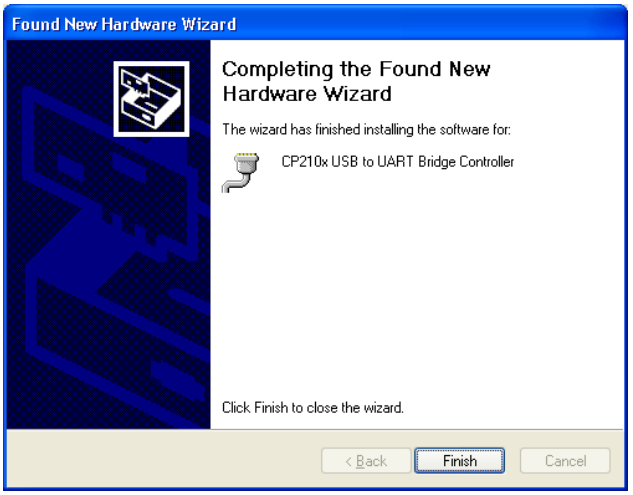

The installation of the USB driver has been completed.

With Windows®2000/Windows®Me

After a PC recognized the USB driver, the installation is started automatically. You do not need to carry out operation for the installation particularly.

Note that the messages during the installation are not indicated.

With Windows®98 Second Edition

1. After the connection, the PC recognizes the USB driver automatically. As the following message is shown, click “Next”.

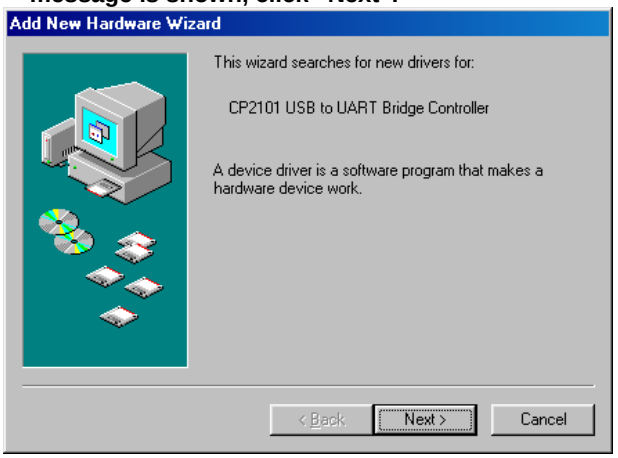

2. The next message is shown. Select “Search for the best driver for your device”, and click “Next”.

3. Check only “Specify a location”, and input the following folder name in “Specify a location”.
“c:/Program Files/Panasonic MEW Control/FP-X USB”
Uncheck the other boxes, and then click “Next”.

4. As the next message is shown, click “Next”.

Ramco National www.PanasonicSensors.com 1-800-280-6933

5. The next message is shown and the installation of the USB driver completes. Click “Finish”.

The installation of the USB driver has been completed.

(It is not necessary to install the USB-COM conversion driver with Windows®98Second Edition.)

6.3.7 Confirming COM Ports

The USB connected to the FP-X is recognized by the PC as a COM port. It depends on your PC environment to which COM port the USB is allocated. Therefore, it is necessary to confirm the COM port number allocated.

Procedure for displaying Device Manager
Displaying Device Manager
Displays Device Manager when the FP-X is connected to the PC with the USB cable.
The display method varies depending on the OS in the PC to be used.

In case of Windows®XP
"My computer" → "View System information" → Click "Hardware" tab → Click "Device Manager".

In case of Windows®2000
"My computer" → "Control panel" → "System" → Click "Hardware" tab → Click "Device manager" → Click "View" menu→ "Device by type".

With Windows®98 Second Edition/Windows®Me
"My computer" → "Control panel" → "System" → Click "Device manager" tab, and select "View devices by type".

Ramco National www.PanasonicSensors.com 1-800-280-6933

Procedure for confirming COM ports

1. Display "Device Manager".

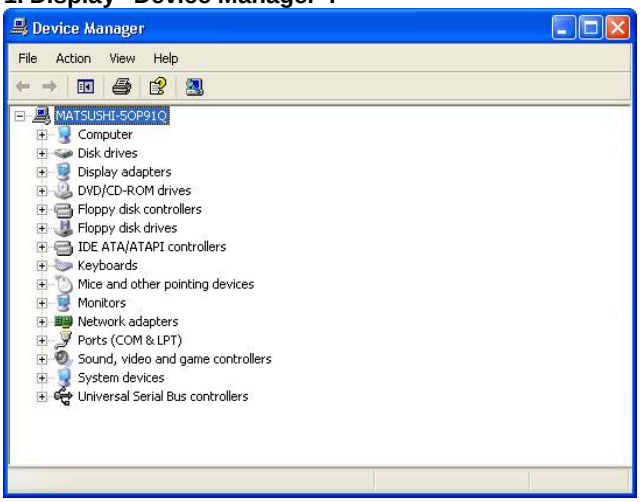

Reference: <6.3.7 Confirming COM Ports>

2. Double-click "Ports (COM & LPT)". As the table of allocation of COM ports, confirm the COM port No.

"CP210x USB to UART Bridge Controller (COM n)" is the allocated COM port.

COM9 is allocated in the following display.

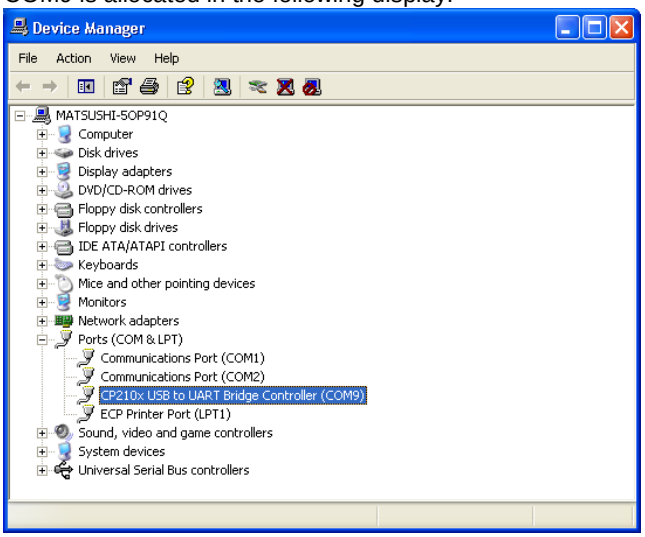

Key Point:

COM port No. is necessary for the connection with the FPWIN GR, etc.

Note:

When "? CP210x USB to UART Bridge Controller" in "Other devices" or "Unknown device" is indicated, the installation has been failed. Reinstall the USB driver.

Reference: <6.3.9 Reinstallation of USB Driver>

Ramco National www.PanasonicSensors.com 1-800-280-6933

6.3.8 Communication with FPWIN GR

1. Boot up the FPWIN GR.

2. When the FPWIN GR activates, the download select window will open.
Select “Cancel” here.

3. Select “Communication setting” in “Option” menu.

4. Specify the communication setting as the table below. Once the setting has been completed, the communication with the USB becomes available.

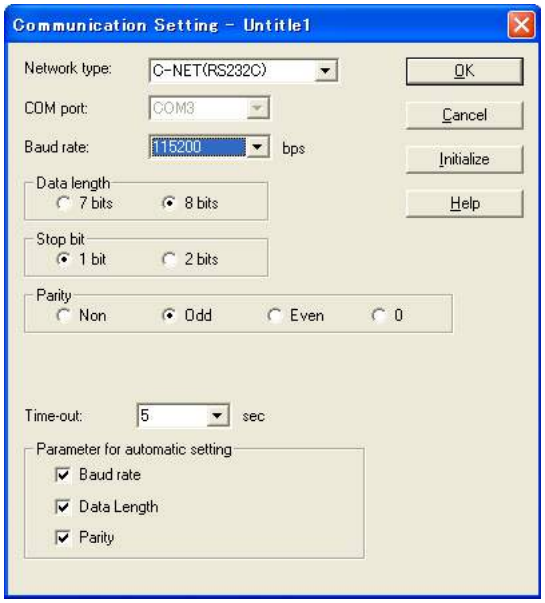

Network type	C-NET (RS232C)
Port No.	COM port No. allocated for the USB
Baud rate	Specify 115200 bps. (Communicates with 115200 bps when the USB is connected)
Data length	8 bits
Stop bit	1 bit
Parity	Odd

Ramco National www.PanasonicSensors.com 1-800-280-6933

6.3.9 Reinstallation of USB Driver

The USB driver must be installed again if the installation was carried out in wrong procedures or cancelled in the process.
Also, reinstall the driver when the USB connection does not work well.

Confirming the status of the USB driver
1. Display "Device manager".

Reference: <6.3.7 Confirming COM Ports>

2. If "? CP210X USB to UART Bridge Controller" is indicated in "Other devices" or "Unknown device", the installation of the USB driver has been failed.

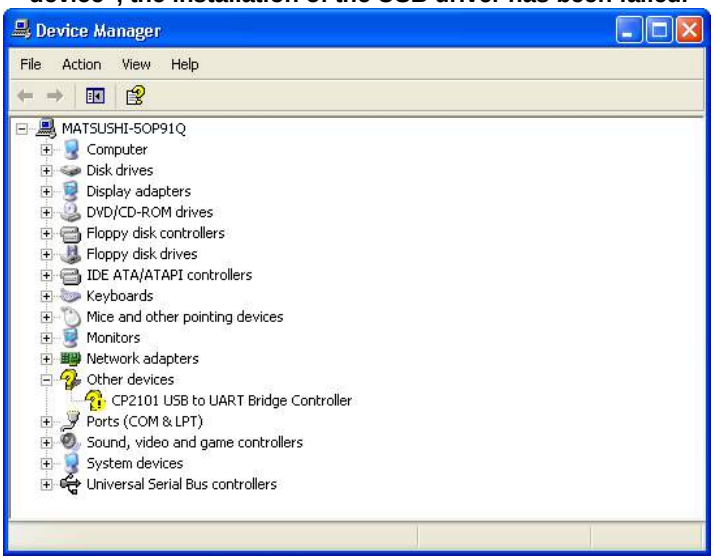

Reinstallation of the USB driver
Right-click "? CP210X USB to UART Bridge Controller", and select "Delete" to delete the driver.

Reinserting the USB cable displays the window for the installation of the USB driver. Reinstall the USB driver.

Reference: <6.3.6 Installation of USB Driver>

6.3.10 Restrictions on USB Communication

There are restrictions on the USB communication.

- **A personal computer having the USB and with the OS supporting the USB (Windows®98 Second Edition/ Windows®Me/ Windows®2000/ Windows®XP) to connect the FP-X using the USB.**

- **The FP-X connected to the USB is recognized by the PC as that is connected through the COM port.**

- **The COM port No. of the COM port allocated for the USB is fixed unless you change the number.**

- **The baud rate when using the USB is 115200 bps.**

- **The USB port is allocated to the COM2 port, and the functions of the communication cassette are restricted as below.**
  The USB port is available in the default setting (It is the same when the system registers are initialized).

	When USB port is not used	When USB port is used
AFPX-COM1	5-wire 1-channel RS232C	3-wire 1-channel RS232C (RS and CS control is not available.)
AFPX-COM2	3-wire 2-channel RS232C	3-wire 1-channel RS232C (The 2nd channel cannot be used.)
AFPX-COM3	No restrictions, 1-channel RS485/RS422	
AFPX-COM4	1-channel RS485 1-channel RS232C	1-channel RS485 (RS232C cannot be used.)
AFPX-COM5	Ethernet 1-channel RS232C	Ethernet (RS232C cannot be used.)
AFPX-COM6	2-channel RS485	1-channel RS485

Note) There is no USB port for the C14 control unit.

- **When multiple FP-X are connected to one PC with the USB, it cannot communicates with them simultaneously. The PC can communication with only the FP-X that was connected first, and other FP-X cannot communicate.**

Ramco National www.PanasonicSensors.com 1-800-280-6933

Chapter 7

Communication Cassette

7.1 Functions and Types

7.1.1 Overview of Communication Cassette

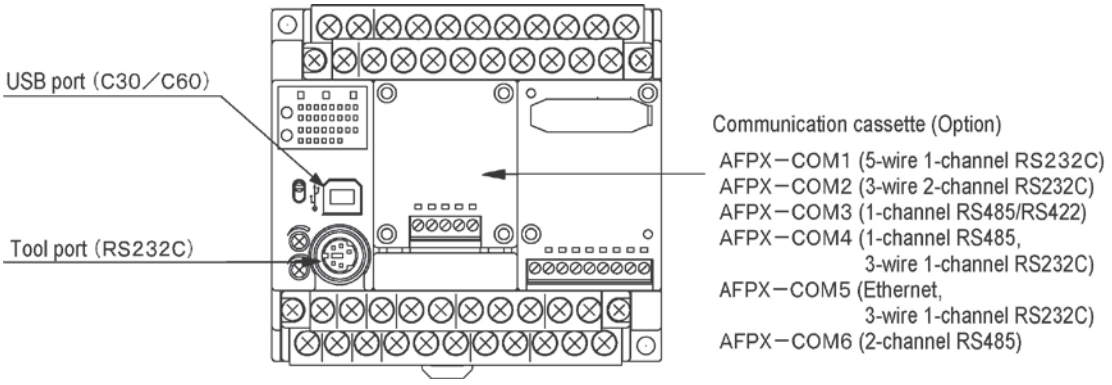

Note:
There are restrictions on the combination of the USB port and communication cassette (for C30/C60 only).

Reference: <7.1.6 About USB Port (For C30/C60 Only)>

Ramco National www.PanasonicSensors.com 1-800-280-6933

7.1.2 Functions of Communication Cassette

With the communication cassette, the FP-X offers four different communication modes as below.

Computer link

- The computer link function is to communicate between a computer and PLCs or between PLC and external devices connected. A proprietary MEWNET protocol called MEWTOCOL-COM is used for communicating with the computer link. MEWTOCOL-COM is also used for the communication between the tool software such as FPWIN-GR and the PLC.
- There are a MEWTOCOL master function and a MEWTOCOL slave function for the computer link. The side that issues commands is called master, and the side that receives the commands, executes the process and sends back responses is called slave.

Note:

It is necessary to set the system register of the communication port to the computer link for using this function.

1. Only the slave function is available for the FP-X relay type Ver1.20 or former version.
2. Both the master and slave functions are available for the FP-X transistor type and relay type Ver1.21 or later version, however, the master function is not available for the TOOL port.

MEWTOCOL master function (Transistor type and relay type Ver1.21 or later version)

- This function is to carry out the communication on the master side (side 0that issues commands) of the computer link. It is executed with the PLC's instruction F145(SEND) or F146(RECV). It is not necessary to write the response process as a ladder, so the program is easier than the general-purpose communication function.

The 1:1 or 1:N communication is available between our devices equipped with the computer link function and the MEWTOCOL-COM.
[Our devices (e.g.)] : PLC, IPD, temperature control unit, eco-power meter

For the MEWTOCOL master function, communication is possible with the COM1 and COM2 ports only. Do not execute the F145 (SEND) nor F146 (RECV) instructions when the unit is used as a slave unit.

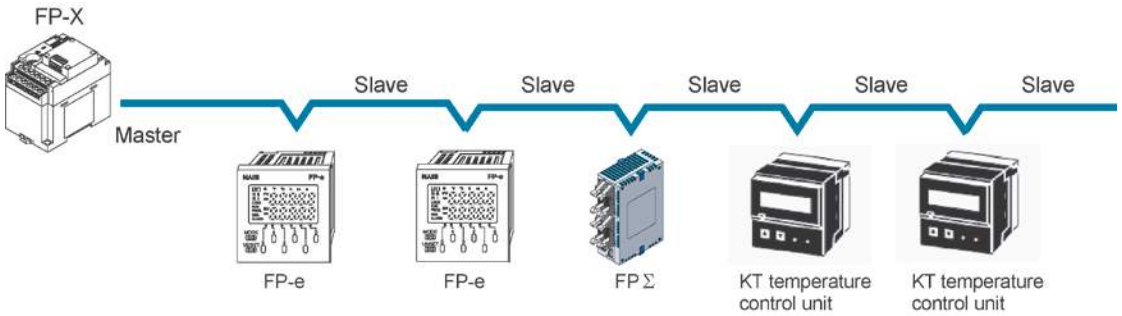

Ramco National www.PanasonicSensors.com 1-800-280-6933

MEWTOCOL slave function

- This function is to receive commands from the computer link, execute the process and send back the results. Any special ladder program is not necessary to use this function. (Set the communication conditions in the system registers.) It enables the 1:1 or 1:N communication with a master computer or PLC.
- The program for the computer side must be written in BASIC or C language according to the MEWTOCOL-COM. MEWTOCOL-COM contains the commands used to monitor and control PLC operation.

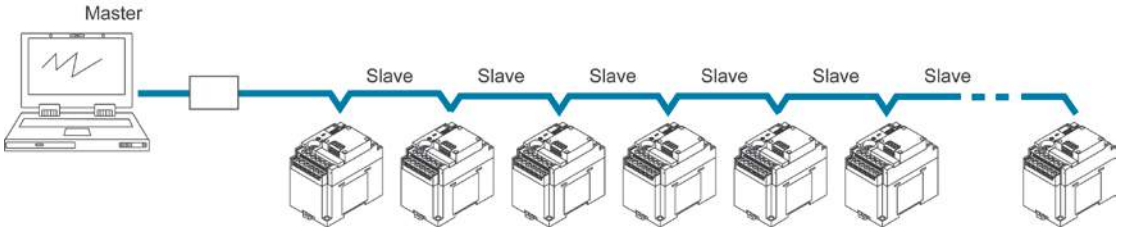

General-purpose serial communication

- With general-purpose serial communication, data can be sent back and forth between an image processing device connected to the COM port and an external device such as a bar code reader.
- Reading and writing of data is done using a ladder program in the FP-X, while reading and writing of data from an external is handled through the data registers.

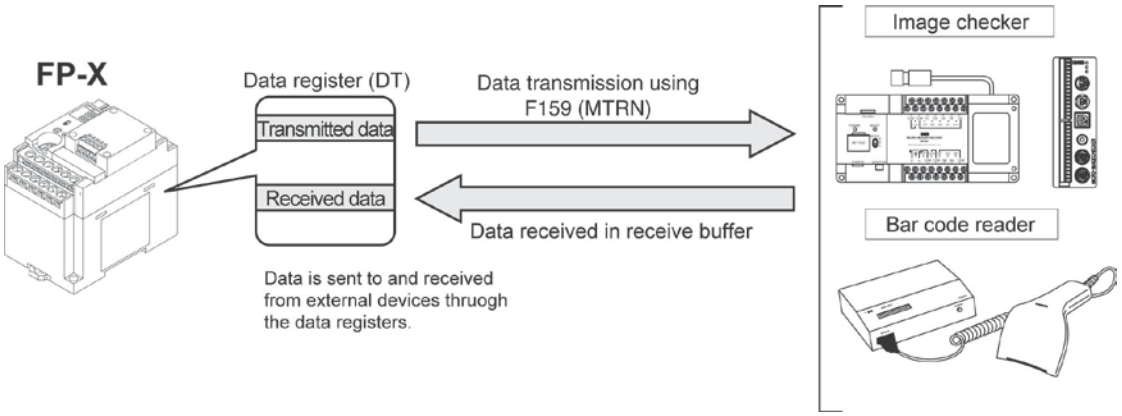

Ramco National www.PanasonicSensors.com 1-800-280-6933

PC(PLC) link

The FP-X supports the link system that connects the PC(PLC) link corresponding to the MEWNET-W0 (max. 16 units) with the twisted pair cables.

- In a PC(PLC) link, data is shared with all PLCs connected via MEWNET using dedicated internal relays called link relays (L) and data registers called link registers (LD).
- If the link relay contact for one PLC goes on, the same link relay also goes on in each of the other PLCs connected to the network. Likewise, if the contents of a link register are rewritten in one PLC, the change is made in the same link register of each of the other PLCs connected to the network.
- The status of the link relays and link registers in any one PLC is fed back to all of the other PLCs connected to the network, so control of data that needs to be consistent throughout the network, such as target production values and type codes, can easily be implemented to coordinate the data, and the data of all units are updated at the same time.

- Link relay

In the figure below, when link relay L0 of the master station (no.1) turns on, this signal is converted by the programs of the other stations, and Y0 of the other stations is activated.

- Link register

In the figure below, if a constant of 100 is written to LD0 of the master station (no.1), the contents of LD0 in the other stations are also changed to a constant of 100.

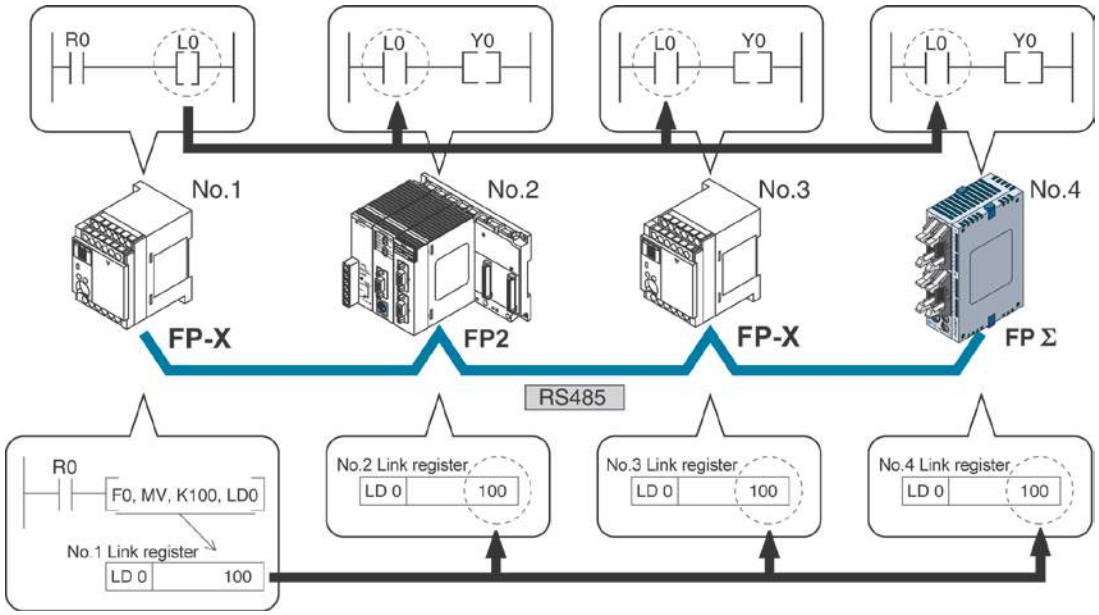

Only the COM1 port can be used for the PC(PLC) link. (Excluding AFPX-COM5)

Ramco National www.PanasonicSensors.com 1-800-280-6933

MODBUS RTU

Function overview

- The MODBUS RTU protocol enables the communication between the FP-X and other devices (including our FP-e, Programmable display GT series and KT temperature control unit).
- Enables to have conversations if the master unit sends instructions (command messages) to slave units and the slave units respond (response messages) according to the instructions.
- Enables the communication between the devices of max. 99 units as the master function and slave function is equipped.
- The communication cassette can be used.

About MODBUS RTU

- The MODBUS RTU communication is a function for the master unit to read and write the data in slave units communicating between them.
- There are ASCI mode and RTU (binary) mode in the MODBUS protocol, however, the FP-X is supported with the RTU (binary) mode only.

Master function

Writing and reading data for various slaves is available using the F145 (SEND) and F146 (RECV) instructions.
Individual access to each slave and the global transmission is possible.

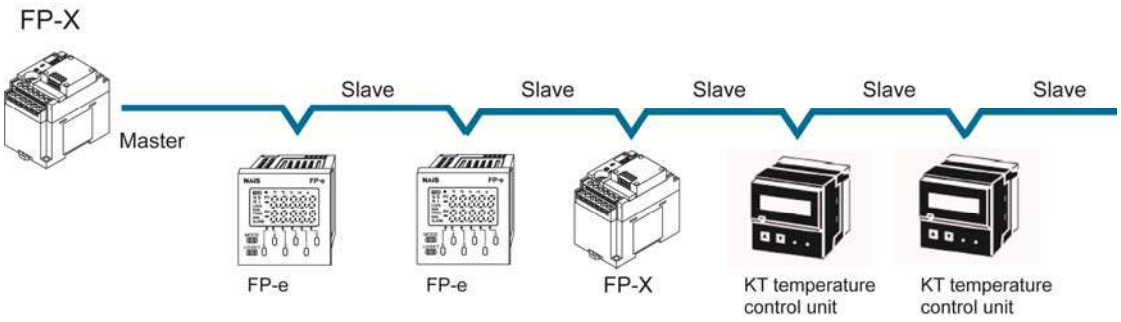

Slave function

If the slave units receive a command message from the master unit, they send back the response message corresponding to the content.
Do not execute the F145 (SEND) nor F146 (RECV) instructions when the unit is used as a slave unit.

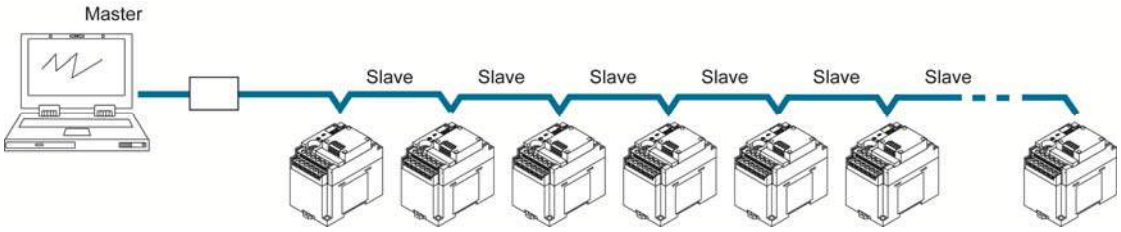

Ramco National www.PanasonicSensors.com 1-800-280-6933

7.1.3 Communication Cassettes

	Name	Specifications	I/O No.	Product No.
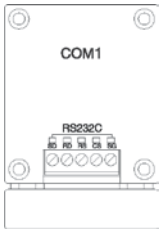	FP-X communication cassette	5-wire type 1-channel RS232C	–	AFPX-COM1
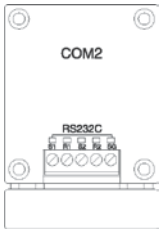	FP-X communication cassette	3-wire type 2-channel RS232C	–	AFPX-COM2
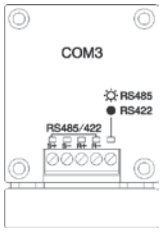	FP-X communication cassette	1-channel RS485/RS422 (isolated)	–	AFPX-COM3
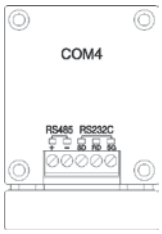	FP-X communication cassette	• 1-channel RS485 (isolated) • 3-wire type 1-channel RS232C	–	AFPX-COM4
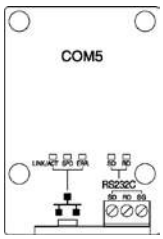	FP-X communication cassette	• Ethernet • 3-wire type 1-channel RS232C	–	AFPX-COM5
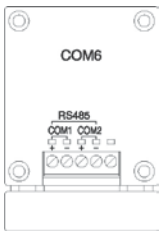	FP-X communication cassette	• 2-channel RS485 (isolated) (non-isolated between channels)	–	AFPX-COM6

Ramco National www.PanasonicSensors.com 1-800-280-6933

1-channel RS232C Type (Product No.: AFPX-COM1)

This communication cassette is a 1-channel unit with a non-isolated RS232C port. RS/CS control is possible.

LED indication / Terminal layout

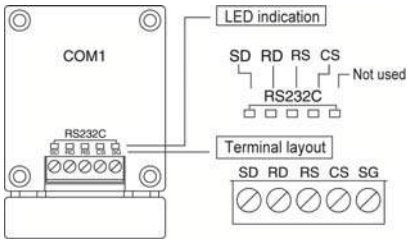

Pin name	Name	Signal direction	Port
SD	Send Data	FP-X → External device	COM1 port
RD	Receive Data	FP-X ← External device	
RS	Request to Send	FP-X → External device	
CS	Clear to Send	FP-X ← External device	
SG	Signal Ground	–	–

Note1) RS (Request to Send) is controllable by the SYS1 instruction.

Note2) Data cannot be sent without the pin CS (Clear to Send). When using with a three-wire port, short-circuit the pin RS and CS.

Note3) With the C30 or C60 type, when the USB port is used, the RS and CS signals are invalid (cannot be controlled).

	1:1 communication	1:N communication
Computer link	Available	-
General-purpose serial communication	Available	-
PC(PLC) link	Available Note)	
MODBUS RTU	Available	-

Note) Number of units is 2.

2-channel RS232C Type (Product No.: AFPX-COM2)

This communication cassette is a 2-channel unit with a non-isolated three-wire RS232C port.

LED indication / Terminal layout

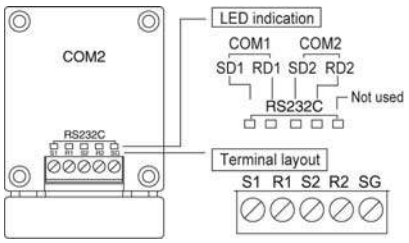

Pin name	Name	Signal direction	Port
S1	Send Data 1	FP-X → External device	COM1 port
R1	Receive Data 1	FP-X ← External device	
S2	Send Data 2	FP-X → External device	COM2 port
R2	Receive Data 2	FP-X ← External device	
SG	Signal Ground	–	–

	1:1 communication	1:N communication
Computer link	Available	-
General-purpose serial communication	Available	-
PC(PLC) link	Available Note1)	
MODBUS RTU	Available	-

Note1) Number of units is 2. (Only the COM1 port can be used.)

Note2) The USB port and the COM2 port (RS232C) of FP-X cannot be used at the same time.

Ramco National www.PanasonicSensors.com 1-800-280-6933

1-channel RS485/RS422 Type (Product No.: AFPX-COM3)

This communication cassette is a 1-channel unit with an isolated two-wire RS485/four-wire RS422 port.

LED indication / Terminal layout

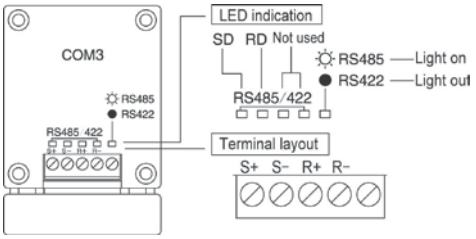

Pin name	Name		Signal direction	Port
	RS485	RS422		
S+	Transmission line (+)	Send Data (+)	–	COM1 port
S-	Transmission line (-)	Send Data (-)	–	
R+	–	Receive Data (+)	–	
R-	–	Receive Data (-)	–	
	–	–	–	

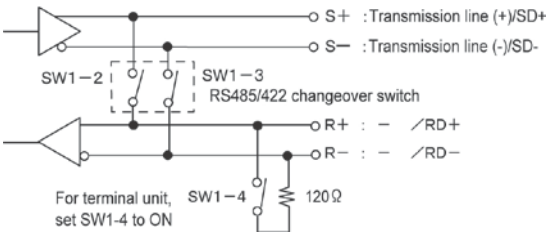

Cassette backside switch

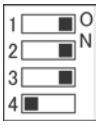

SW1	RS485	RS422
1 2 3	ON	OFF
4	ON for terminal unit	

Change the switch at the back of the cassette depending on the state of the communication.

	1:1 communication	1:N communication
Computer link	-	Available
General-purpose serial communication	-	Available
PC(PLC) link	Available Note)	
MODBUS RTU	-	Available

Note) When using this cassette, the data is always transmitted by the STOP bit2 regardless the setting of stop bit. The data can be received by either STOP bit 1 or 2 regardless the setting of stop bit.

Ramco National www.PanasonicSensors.com 1-800-280-6933

1-channel RS485 and 1-channel RS232C Combination Type (Product No.: AFPX-COM4)

This communication cassette is a 1-channel unit with an isolated two-wire RS485 port and 1-channel unit with an isolated three-wire RS232C port.

LED indication / Terminal layout

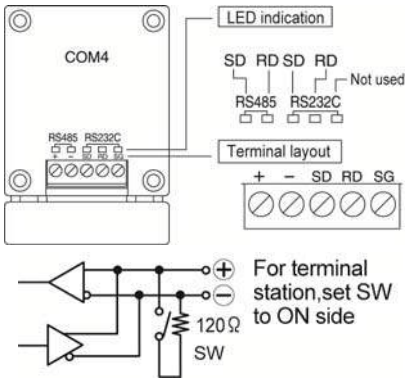

Pin name	Name	Signal direction	Port
+	Transmission line (+)	–	RS485 (COM1 Port)
-	Transmission line (-)	–	
SD	Send Data	FP-X → External device	RS232C (COM2 Port)
RD	Receive Data	FP-X ← External device	
SG	Signal Ground	–	

	1:1 communication	1:N communication
Computer link	-	Available
General-purpose serial communication	-	Available
PC(PLC) link	Available Note1)	
MODBUS RTU	-	Available

Note1) Only the RS485 can be used (COM1 port).

Note2) The USB port and the COM2 port (RS232C) of FP-X cannot be used at the same time.

Note3) When using this cassette, the data is always transmitted by the STOP bit2 regardless the setting of stop bit. The data can be received by either STOP bit 1 or 2 regardless the setting of stop bit.

Ramco National www.PanasonicSensors.com 1-800-280-6933

Ethernet and 1-channel RS232C Combination Type (Product No.: AFPX-COM5)

This communication cassette is a 1-channel unit with an Ethernet interface and an isolated three-wire RS232C port. Ethernet performs communication at 100 Mbps or 10 Mpbs, but communication between AFPX-COM5 and FP-X is performed at up to 115200 bps according to the system register setting of FP-X.

LED indication / Terminal layout

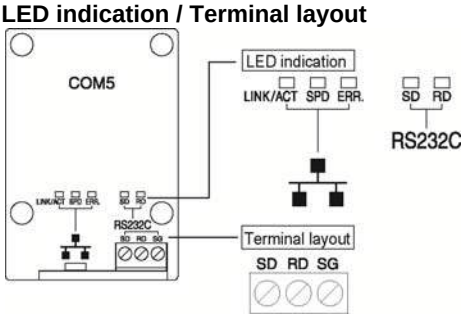

LEDs for Ethernet

LINK/ACT	On: Connection establishment Flashing: During communication
SPD	On: 100 Mbps Off: 10 Mbps
ERR	On: Error occurred Flashing: Initialization switch ON

Cassette backside switch

Initialization of communication setting	ON
Normal communication	OFF (Default)

It is used to restore the setting to the factory default in such a case that an error occurred in communication. The setting is initialized by turning on electricity with the switch being on. After initialization, turn off the power supply of the main unit, and then turn the switch off.

	1:1 communication	**1:N communication**
Computer link	Available	Available
General-purpose serial communication	Available	Not available
PC(PLC) link	Note2)	Note2)
MODBUS RTU	Available	Not available

A maximum of 3 connections are available with the Ethernet communication in the computer link mode.

Note1) The USB port and the COM2 port (RS232C) of FP-X cannot be used at the same time.

Note2) The PC (PLC) link function of the FP-X is available via Ethernet.

Ramco National www.PanasonicSensors.com 1-800-280-6933

2-channel RS485 Type (Product No.: AFPX-COM6)

This communication cassette is a 2-channel unit with an isolated two-wire RS485 port.

LED indication / Terminal layout

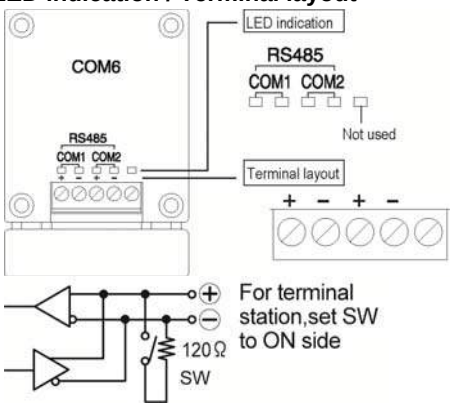

Pin name	Name	Signal direction	Port
+(COM1)	Transmission line (+)	—	RS485 (COM1 port)
-(COM1)	Transmission line (-)	—	
+(COM2)	Transmission line (+)	—	RS485 (COM2 port)
-(COM2)	Transmission line (-)	—	

Cassette backside switch

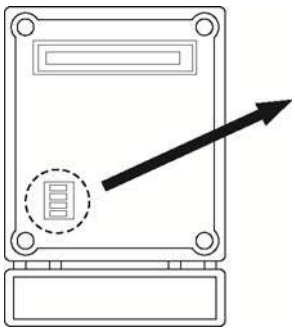

Terminal resistance		COM2 Baud rate Note)	
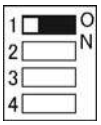	COM1 general unit (Default)	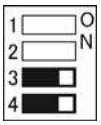	115200bps
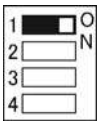	COM1 terminal unit	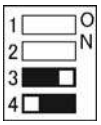	115200bps
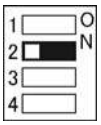	COM2 general unit (Default)	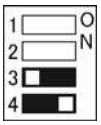	19200bps
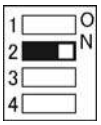	COM2 terminal unit	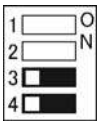	9600bps (Default)

Note) The baud rate for the COM1 port is specified only by the system register. However, for the COM2 port, it should be specified by the switches and the system register.

	1:1 communication	1:N communication
Computer link	-	Available
General-purpose serial communication	-	Available
PC(PLC) link	Available Note1	
MODBUS RTU	-	Available

Note) Only the COM1 port can be used.

Note1) For the COM1 port, the data is always transmitted by the STOP bit 2 regardless the setting of stop bit. The data can be received by either STOP bit 1 or 2 regardless the setting of stop bit.

Note2) The USB port and the COM2 port (RS485) of FP-X cannot be used at the same time.

Ramco National www.PanasonicSensors.com 1-800-280-6933

7.1.4 Examples of Connection

AFPX-COM1: 1-channel 5-wire RS232C

COM1

Pin name	Signal name	Abbre.
SD	Send Data	SD
RD	Receive data	RD
RS	Request to Send	RS
CS	Clear to Send	CS
SG	Signal Ground	SG

Destination device

Abbre.	Signal name
RD	Receive Data
SD	Send Data
CS	Clear to Send
RS	Request to Send
SG	Signal Ground

Note) When the device to connect is a three-wire type, the RS of the COM 1 port should be connected to the CS.

AFPX-COM2: 2-channel 3-wire RS232C

COM 2

Pin name	Signal name	Abbre.
S1	Send Data 1	SD
R1	Receive Data 1	RD
S2	Send Data 2	SD
R2	Receive Data 2	RD
SG	Signal Ground	SG

Destination device 1

Abbre.	Signal name
RD	Receive Data
SD	Send Data
SG	Signal Ground

Destination device 2

Abbre.	Signal name
RD	Receive Data
SD	Send Data
SG	Signal Ground

AFPX-COM3: 1-channel RS485/RS422

Using RS485

COM 3

Pin name	Signal name	Abbre.
S+	Transmission line (+)	S+
S−	Transmission line (-)	S−
	Not used	
	Not used	
	Not used	

Destination device

Abbre.	Signal name
+	Transmission line (+)
−	Transmission line (-)

(To other device)

Using RS422

COM 3

Pin name	Signal name	Abbre.
S+	Send Data (+)	SD+
S−	Send Data (-)	SD−
R+	Receive Data (+)	RD+
R−	Receive Data (-)	RD−
	Not used	

Destination device

Abbre.	Signal name
RD+	Receive Data (+)
RD−	Receive Data (-)
SD+	Send Data (+)
SD−	Send Data (-)

Note) There are several names for the signal names of RS422. Confirm with the instruction manuals for each device.

Ramco National www.PanasonicSensors.com 1-800-280-6933

AFPX-COM4: 1-channel RS485 and 1-channel 3-wire RS232C

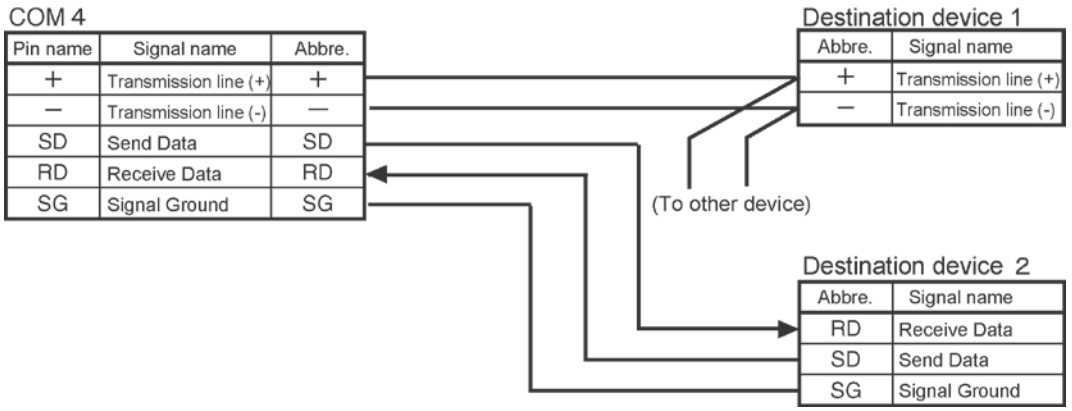

AFPX-COM5: 1-channel Ethernet and 1-channel 3-wire RS232C

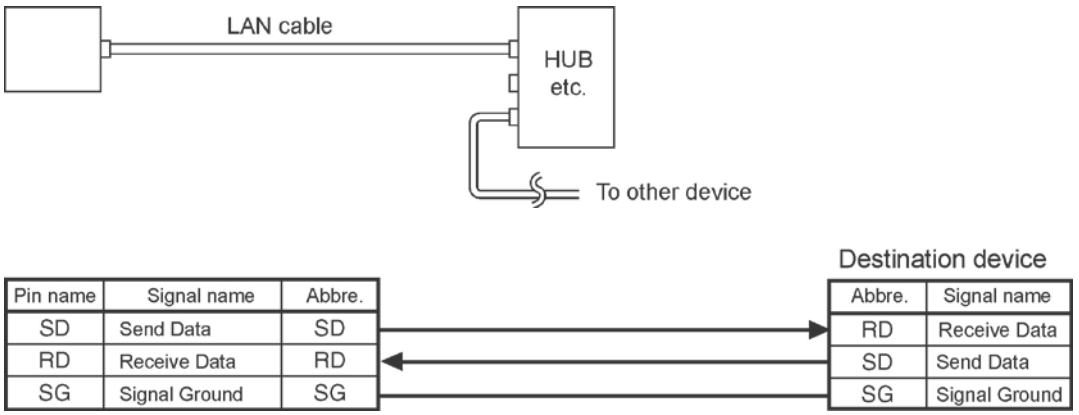

AFPX-COM6: 2-channel RS485

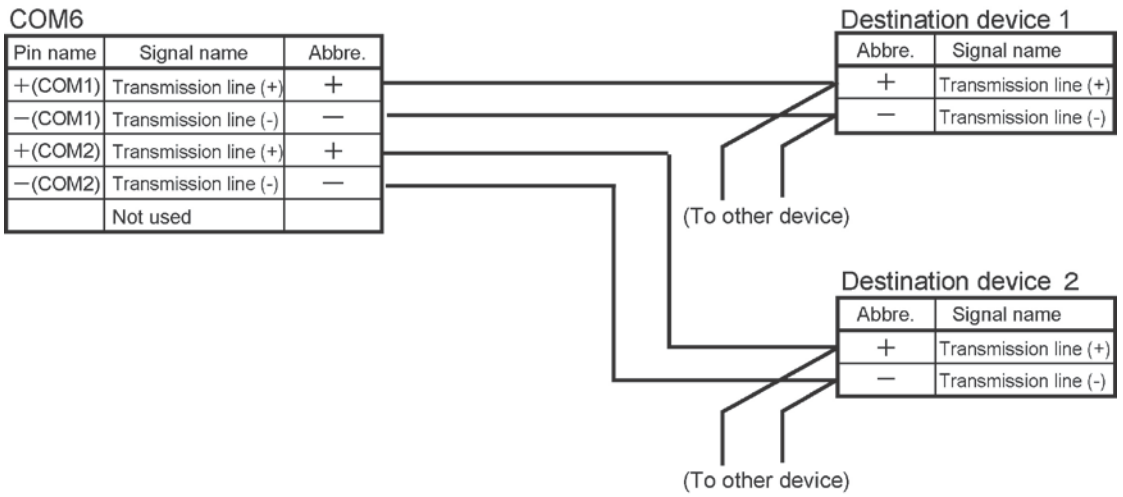

Note) Non-insulated between the COM1 and COM2.

Ramco National www.PanasonicSensors.com 1-800-280-6933

7.1.5 Names and Principle Applications of the Ports

<table>
<tr><th rowspan="2">Port name</th><th colspan="2">Port type</th><th rowspan="2">Communication function</th></tr>
<tr><th>USB is used</th><th>USB is not used</th></tr>
<tr><td>Tool port</td><td colspan="2">Fitted with the main unit as a standard equipment
(Mini-DIN 5-pin connector)</td><td>Computer link
General-purpose serial communication</td></tr>
<tr><td>COM1 port</td><td>Communication cassette
Note)</td><td rowspan="2">Communication cassette</td><td>Computer link
General-purpose serial communication
PC(PLC) link
MODBUS RTU</td></tr>
<tr><td>COM2 port</td><td>Fitted with the main unit as a standard equipment
USB port
(For C30/C60 only)</td><td>Computer link
General-purpose serial communication
MODBUS RTU</td></tr>
</table>

Note) There are restrictions of use on the communication cassette when using the USB port (refer to the next page).
The PC (PLC) link cannot be used with the AFPX-COM5.

7.1.6 About USB Port (For C30/C60 Only)

The USB port is allocated to the COM2 port, and the functions of the communication cassette are restricted as below when the USB port is used.

- The USB port is available in the default setting (It is the same when the system registers are initialized).

	When USB port is not used	When USB port is used
AFPX-COM1	5-wire 1-channel RS232C	3-wire 1-channel RS232C (RS and CS control is not available.)
AFPX-COM2	3-wire 2-channel RS232C	3-wire 1-channel RS232C (The 2nd channel cannot be used.)
AFPX-COM3	No restrictions, 1-channel RS485/RS422	
AFPX-COM4	1-channel RS485 1-channel RS232C	1-channel RS485 (RS232C cannot be used.)
AFPX-COM5	Ethernet 1-channel RS232C	Ethernet (RS232C cannot be used.)
AFPX-COM6	2-channel RS485	1-channel RS485

Ramco National www.PanasonicSensors.com 1-800-280-6933

7.2 Communication Specifications

	Computer link Note1)			General-purpose serial communication Note1)			PC(PLC) link	MODBUS RTU Note1)		
	1:1 communication		1:N commu-nication	1:1 communication		1:N commu-nication		1:1 communication		1:N commu-nication
Inter-face	RS232C	RS422	RS485	RS232C	RS422	RS485	RS232C RS422 RS485	RS232C	RS422	RS485
Target items	**-TOOL port** **AFPX -COM1 -COM2 -COM4**	**AFPX -COM3**	**AFPX -COM3 -COM4 -COM6**	**-TOOL port** **AFPX -COM1 -COM2 -COM4**	**AFPX -COM3**	**AFPX -COM3 -COM4 -COM6**	**AFPX -COM1 -COM2 -COM3 -COM4 -COM6**	**AFPX -COM1 -COM2 -COM4**	**AFPX -COM3**	**AFPX -COM3 -COM4 -COM6**
Commu-nication method	Half-duplex communication		Two-wire, half-duplex communi-cation	Half-duplex communication		Two-wire, half-duplex communi-cation	Token bus (Floating master)	Half-duplex communication		Two-wire, half-duplex communi-cation

Note1) Although it has adequate tolerance to noise, it is recommendable to make a program to execute retransmission. (in order to improve reliability of the communication when a communication error occurs due to excessive noises or when a receiver equipment cannot receive data temporarily).

Communication port (Ethernet)

	Computer link	General-purpose serial communication
Interface	IEEE802. 3u, 10BASE-T/100BASE-TX	
No. of connections	Max. 1 connection (Client) Max. 3 connections (Server)	Max. 1 connection
Server	Client, Server	Client, Server
Target item	AFPX-COM5	

Ramco National www.PanasonicSensors.com 1-800-280-6933

Communication specifications 1 Interface: RS232C, RS422, RS485

Item		Specifications		
Interface		RS232C (non-isolated)	RS422 (isolated) Note1)	RS485 (isolated) Note1) 2)
Communication mode		1:1 communication		1:N communication
Communication method		Half-duplex communication		Two-wire half-duplex communication
Synchronous method		Start stop synchronous system		
Transmission line		Multicore shielded line		Shielded twisted-pair cable or VCTF
Transmission distance		15 m	Max. 1200 m Note1)	Max. 1200 m Note1) 2)
Baud rate Note3) (to be set by system register) Note8)		300, 600, 1200, 2400, 4800, 9600, 19200, 38400, 57600, 115200 bps		
Trans-mission code	Computer link	ASCII, JIS7, JIS8		
	General-purpose serial communication	ASCII, JIS7, JIS8, Binary		
	MODBUS RTU	Binary		
Communication format (to be set by system register) Note4)	Data length	7 bits/8 bits		
	Parity	None/Even/Odd		
	Stop bit	1 bit/2 bits		
	Start code	STX/No STX		
	End code	CR/CR+LF/None/ETX		
No. of connected units Note5) 6) 7)		2 units		Max. 99 units (max. 32 units when C-NET adapter is connected.)

Note1) When connecting a commercially available device that has an RS485 interface, please confirm operation using the actual device. In some cases, the number of units, transmission distance, and baud rate vary depending on the connected device.

Note2) The values for the transmission distance, baud rate and number of units should be within the values noted in the graph below.

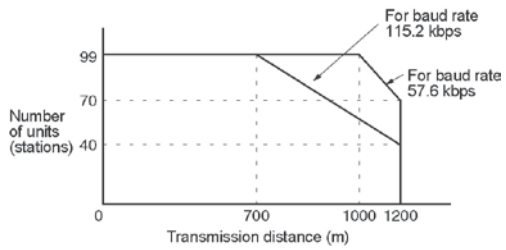

When using a baud rate of 300 bps to 38400 bps, you can set up to a maximum of 99 units (stations) and maximum transmission distance of 1200 m.

Note3) Only 9600 bps or 19200 bps can be specified when the C-NET adapter is connected with the RS485 interface.

Note4) The start code and end code can be used only in the general-purpose serial communication mode.

Note5) The converter SI-35 manufactured by Lineeye Co., Ltd is recommendable for the RS485 at the computer side. Adjust the response time for the FP-X by the SYS1 instruction if necessary.

Note6) Unit numbers should be registered by the system register.

Note7) The termination resistance of the RS485/RS422 in the COM3,COM4 and COM6 is specified by the dip switch in the communication cassette.
There is no termination resistance at the RS232C port.

Ramco National www.PanasonicSensors.com 1-800-280-6933

Note8) The baud rates of 300, 600 and 1200 bps can be specified by the SYS instruction only (Ver 2.0 or later).

Communication specifications 2 Interface: Ethernet

Item		Specifications
Interface		IEEE802. 3u, 10BASE-T/100BASE-TX Connector shape: RJ45
Transmission specifications	Baud rate	100 Mpbs/10 Mbps
	Transmission method	Baseband
	Max. segment length	100 m Note1)
Communication cable		UTP (Category 5)
Protocol		TCP/IP, UDP/IP, ICMP, ARP, DHCP
Function		Auto-negotiation function MDI/MDI-X Auto-crossover function

Note1) The length between a HUB and the module.

Ramco National www.PanasonicSensors.com 1-800-280-6933

7.2.1 Precaution When Using RS485 Port

AFPX-COM3, AFPX-COM4

SYS1 instruction is available for FP-X, which enables to change the time after receiving a command until a response is returned.

With the converter SI-35 manufactured by Lineeye Co., Ltd in the RS485 communication, adjust the response time by this instruction if necessary.

SYS1 instruction: This is to delay a response for [n] scan time to be specified.

```
|
|--| |--[ SYS1  M     COM1, WAIT n  ]   n=0~999
|
```

Example:

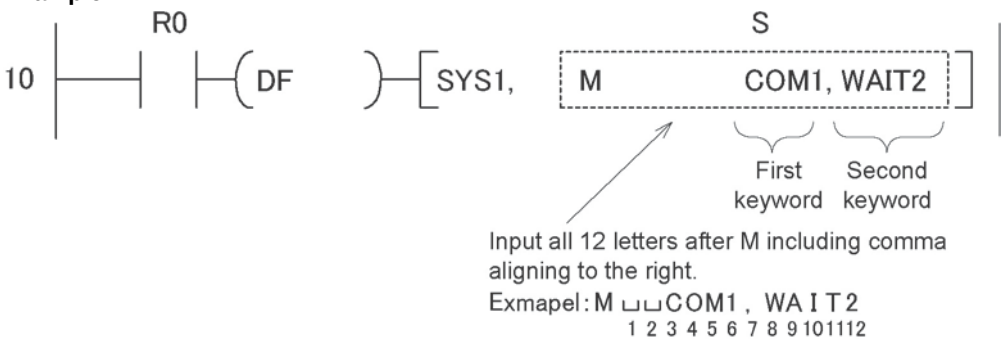

When R0 turns on, the response of COM1 port (RS485 port) delays for two scans. If the scan time is 500µs, it delays for 1 ms.

Reference: <FP series Programming manual ARCT1F313E>

Ramco National www.PanasonicSensors.com 1-800-280-6933

7.3 Communication Function 1: Computer Link

7.3.1 Computer Link

Overview

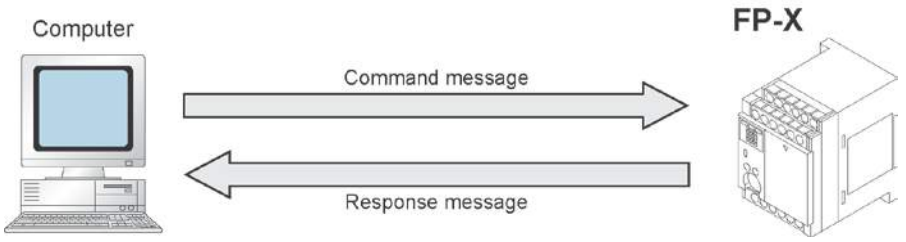

Computer link

- The computer link function is to communicate between a computer and PLCs or between PLC and external devices connected. A proprietary MEWNET protocol called MEWTOCOL-COM is used for communicating with the computer link. MEWTOCOL-COM is also used for the communication between the tool software such as FPWIN-GR and the PLC.
- There are a MEWTOCOL master function and a MEWTOCOL slave function for the computer link. The side that issues commands is called master, and the side that receives the commands, executes the process and sends back responses is called slave.

Note:

It is necessary to set the system register of the communication port to the computer link for using this function.

1. Only the slave function is available for the FP-X relay type Ver 1.20 or former version.
2. Both the master and slave functions are available for the FP-X transistor type and relay type (Ver 1.21 or later version), however, the master function is not available for the TOOL port.

Ramco National www.PanasonicSensors.com 1-800-280-6933

MEWTOCOL master function (Transistor type, relay type Ver 1.21 or later version)

- This function is to carry out the communication on the master side (side 0that issues commands) of the computer link. It is executed with the PLC's instruction F145(SEND) or F146(RECV). It is not necessary to write the response process as a ladder, so the program is easier than the general-purpose communication function.

The 1:1 or 1:N communication is available between our devices equipped with the computer link function and the MEWTOCOL-COM.
[Our devices (e.g.)] : PLC, IPD, temperature control unit, eco-power meter

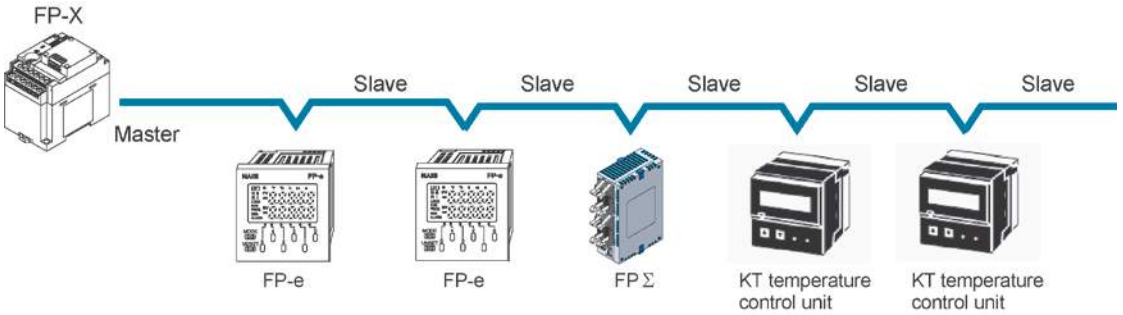

MEWTOCOL slave function

- This function is to receive commands from the computer link, execute the process and send back the results. Any special ladder program is not necessary to use this function. (Set the communication conditions in the system registers.) It enables the 1:1 or 1:N communication with a master computer or PLC.
- The program for the computer side must be written in BASIC or C language according to the MEWTOCOL-COM. MEWTOCOL-COM contains the commands used to monitor and control PLC operation.

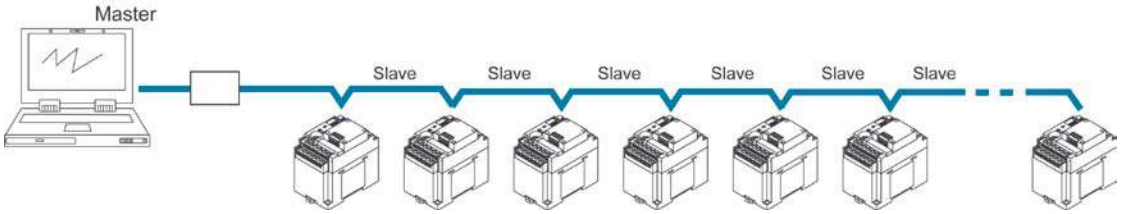

Ramco National www.PanasonicSensors.com 1-800-280-6933

Outline of operation when using computer link (MEWTOCOL slave)

Command and response

- Instructions issued by the computer to the PLC are called commands. Messages sent back to the computer from the PLC are called responses. When the PLC receives a command, it processes the command regardless of the sequence program, and sends a response back to the computer.

MEWTOCOL-COM sketch

- Communication is carried out in a conversational format, based on the MEWTOCOL-COM communication procedures.
- Data is sent in ASCII format.
- The computer has the first right of transmission. The right of transmission shifts back and forth between the computer and the PLC each time a message is sent.

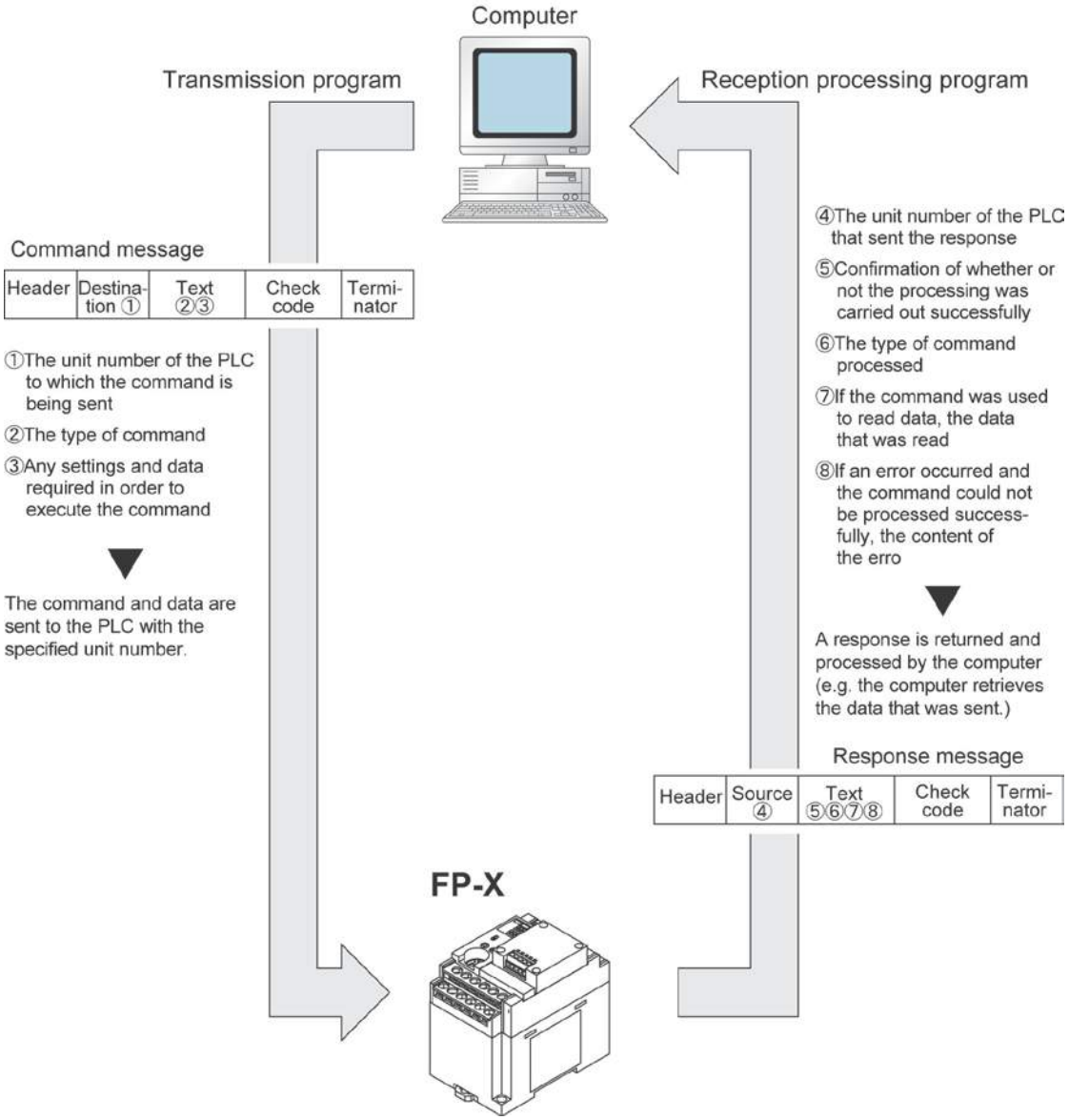

Ramco National www.PanasonicSensors.com 1-800-280-6933

Format of command and response

Command message

All command-related items should be noted in the text segment. The unit number must be specified before sending the command.

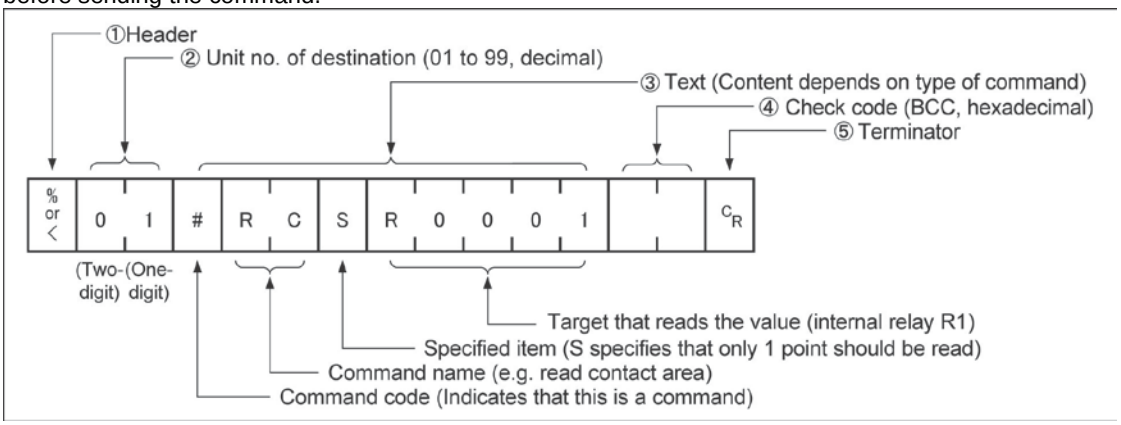

1. Header (start code)

Commands must always have a “%” (ASCII code: H25) or a “<” (ASCII code: H3C) at the beginning of a message.

2. Unit number

The unit number of the PLC to which you want to send the command must be specified. In 1:1 communication, the unit number “01” (ASCII code: H3031) should be specified. The unit No. of the PLC is specified by the system register.

3. Text

The content differs depending on the command. The content should be noted in all upper-case characters, following the fixed formula for the particular command.

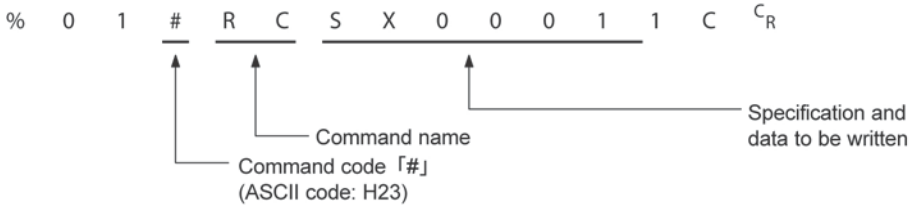

4. Check code

BCC (block check code) for error detection using horizontal parity. The BCC should be created so that it targets all of the text data from the header to the last text character. The BCC starts from the header and checks each character in sequence, using the exclusive OR operation, and replaces the final result with character text. It is normally part of the calculation program and is created automatically.
The parity check can be skipped by entering “* *” (ASCII code: H2A2A) instead of the BCC.

5. Terminator (end code)

Messages must always end with a “C_R” (ASCII code: H0D).

Ramco National www.PanasonicSensors.com 1-800-280-6933

Note: When writing

- The method for writing text segments in the message varies depending on the type of command.
- If there is a large number of characters to be written, they may be divided and sent as several commands. If there is a large number of characters in the value that was loaded, they may be divided and several responses sent.

Key Point:

- With the FP-X, an expansion header “<” is supported to send single frames of up to 2048 characters as well as general “%”.

Type of header	No. of characters that can be sent in 1 frame
%	Max. 118 characters
<	Max. 2048 characters

Response message

The PLC that received the command in the example above sends the processing results to the computer.

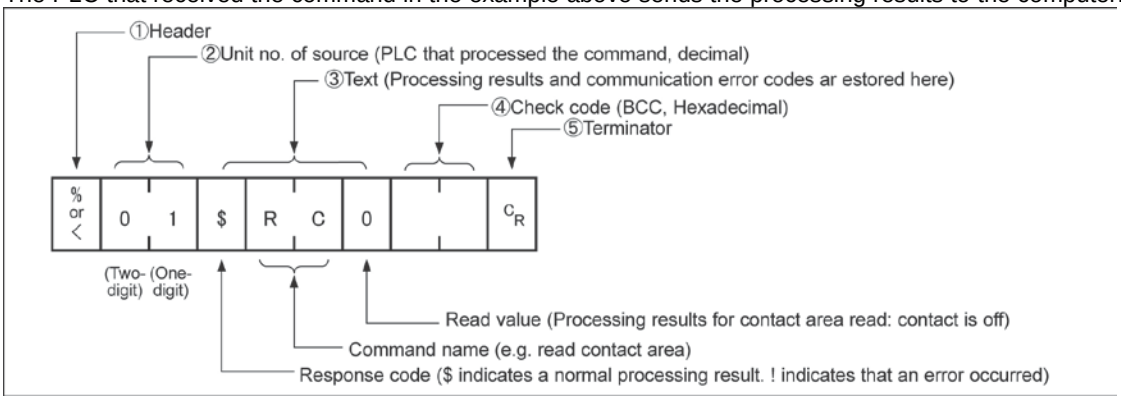

1. Header (start code)

A “%” (ASCII code: H25) or “<” (ASCII code: H3C) must be at the beginning of a message. The response must start with the same header that was at the beginning of the command.

2. Unit number

The unit number of the PLC that processed the command is stored here.

3. Text

The content of this varies depending on the type of command. The value should be read based on the content. If the processing is not completed successfully, an error code will be stored here, so that the content of the error can be checked.

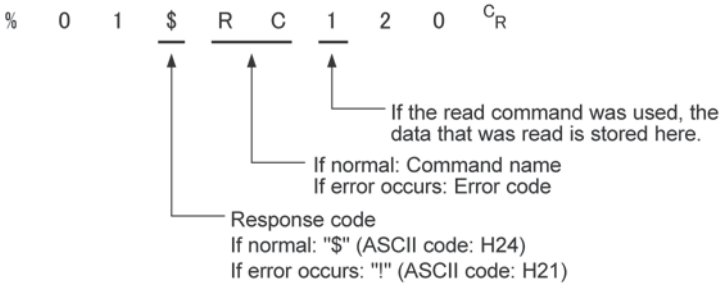

Ramco National www.PanasonicSensors.com 1-800-280-6933

4. Check code

BCC (block check code) for error detection using horizontal parity. The BCC starts from the header and checks each character in sequence, using the exclusive OR operation, and replaces the final result with character text.

5. Terminator (end code)

There is always a "$_{CR}$" (ASCII code: H0D) at the end of the message.

Note: When reading

- If no response is returned, the communication format may not be correct, or the command may not have arrived at the PLC, or the PLC may not be functioning. Check to make sure all of the communication specifications (e.g. baud rate, data length, and parity) match between the computer and the PLC.
- If the response contains an "!" instead of a "$", the command was not processed successfully. The response will contain a communication error code. Check the meaning of the error code.
- Unit number and command name are always identical in a command and its corresponding response (see below). This makes the correspondence between a command and a response clear.

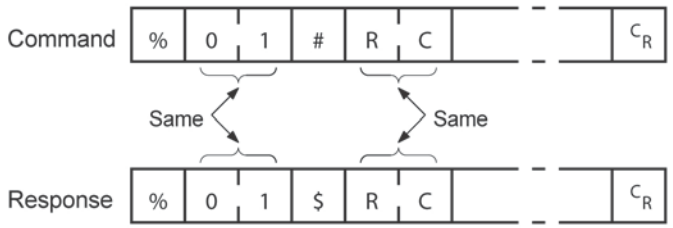

Ramco National www.PanasonicSensors.com 1-800-280-6933

Commands to be used

Command name	Code	Description
Read contact area	RC (RCS) (RCP) (RCC)	Reads the on and off status of contacts. - Specifies only one point. - Specifies multiple contacts. - Specifies a range in word units.
Write contact area	WC (WCS) (WCP) (WCC)	Turns contacts on and off. - Specifies only one point. - Specifies multiple contacts. - Specifies a range in word units.
Read data area	RD	Reads the contents of a data area.
Write data area	WD	Writes data to a data area.
Read timer/counter set value area	RS	Reads the timer/counter setting value.
Write timer/counter set value area	WS	Writes the timer/counter setting value.
Read timer/counter elapsed value area	RK	Reads the timer/counter elapsed value.
Write timer/counter elapsed value area	WK	Writes the timer/counter elapsed value.
Register or Reset contacts monitored	MC	Registers the contact to be monitored.
Register or Reset data monitored	MD	Registers the data to be monitored.
Monitoring start	MG	Monitors a registered contact or data using MD and MC.
Preset contact area (fill command)	SC	Embeds the area of a specified range in a 16-point on and off pattern.
Preset data area (fill command)	SD	Writes the same contents to the data area of a specified range.
Read system register	RR	Reads the contents of a system register.
Write system register	WR	Specifies the contents of a system register.
Read the status of PLC	RT	Reads the specifications of the programmable controller and error codes if an error occurs.
Remote control	RM	Switches the operation mode of the programmable controller.
Abort	AB	Aborts communication.

Reference: <MEWTOCOL Communication Procedure>

Ramco National www.PanasonicSensors.com 1-800-280-6933

Setting communication parameters

Setting for Baud rate and communication format

The settings for baud rate and communication format of the COM port are entered using the FPWIN GR. Select “Options” in the menu bar, and then select “PLC Configuration”. Click “COM Port”. There are separate tabs for setting the COM1 and COM2 .

Note:

- As the default of the COM2 port is “Internal USB”, select “COM. cassette”.
- When the MEWTOCOL master is used, also select “Computer Link”.

Dialog box of PLC system register setting

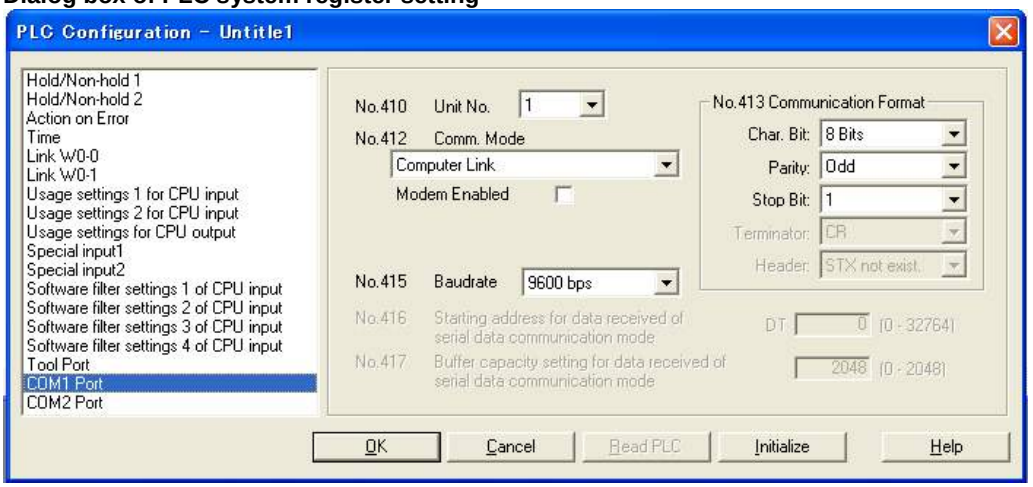

No. 410 (for COM1 port), No. 411 (for COM2 port) unit number

The unit number can be set within a range of 1 to 99.

No. 412 Communication mode

Select the COM port operation mode:

Click on ▼, and select “Computer Link”.

No. 413 (for COM1 port), No. 414 (for COM2 port) Communication Format setting

Default setting:

Char. Bit ..... 8 bits

Parity ..... Odd

Stop Bit ..... 1 bit

Terminator ..... CR

Header ..... STX not exist

To change the communication format to match an external device connected to the COM port, enter the settings for the various items.

No. 415 Baud rate (communication speed) setting

The default setting for the communication speed for the various ports is 9600 bps. Change the value to match the external device connected to the COM port:

Click on ▼, and select one of the values from 2400, 4800, 9600, 19200, 38400, 57600 and 115200 bps.

Restrictions

The COM port of the communication cassette supports all the commands of the MEWTOCOL-COM. There is no restriction.

Ramco National www.PanasonicSensors.com 1-800-280-6933

7.3.2 1:1 Communication (Computer link)

System register settings

Settings for COM1 port (AFP-COM1, AFPX-COM2, AFPX-COM3, AFPX-COM5)

No.	Name	Set Value
No. 410	Unit number COM1 port	1
No. 412 Note)	Communication mode COM1 port	Computer link
No. 413	Communication format for COM1 port	Data length: …… 7 bits/8 bits Parity check: ….. None/Odd/Even Stop bit: ……. 1 bit/2 bit Terminator: …….. CR Header: ……. No STX
No. 415 Note)	Baud rate setting for COM1 port	2400 to 115200 bps

Settings for COM2 port (AFPX-COM2, AFPX-COM4, AFPX-COM5)

No.	Name	Set Value
No. 411	Unit number COM2 port	1
No. 412 Note)	Communication mode COM2 port	Computer link
No. 414	Communication format for COM2 port	Data length: …… 7 bits/8 bits Parity check: ….. None/Odd/Even Stop bit: ……. 1 bit/2 bit Terminator: …….. CR Header: ……. No STX
No. 415 Note)	Baud rate setting for COM2 port	2400 to 115200 bps

The communication format and baud rate (communication speed) should be set to match the connected computer.

Note) They are set in different bit positions of the same system register no., so the different settings are possible for port 1 and port 2.
The baud rates of 300, 600 and 1200 bps can be specified by the SYS1 instruction. However, the setting value of the system register cannot be changed.

Programming

- For a computer link, a program should be created that allows command messages to be sent and response messages to be received on the computer side. No communication program is required on the PLC side. (Specify the communication format only by the system register.)
- Create the program on the PC side using Basic language or C language according to the MEWTOCOL-COM. Commands to monitor and control the operation of the PLC are provided in the MEWTOCOL-COM.

Ramco National www.PanasonicSensors.com 1-800-280-6933

Connection to the computer <1:1 communication>

Overview

For a 1:1 computer link between the FP-X and a computer, an RS232C cable is needed. Communication is performed via commands from the computer and responses from the PLC.

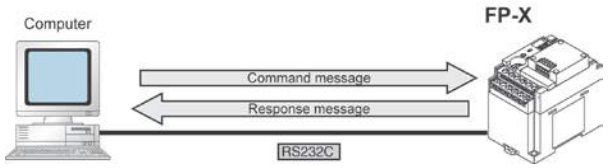

<Using AFPX-COM1> 1-channel RS232C type

Computer side (D-SUB 9-pin)

Symbol	Pin no.
CD	1
RD	2
SD	3
ER	4
SG	5
DR	6
RS	7
CS	8
RI	9

FP-X side (5-pin terminal)

Pin name	Signal name	Abbre.
SD	Sned Data	SD
RD	Receive Data	RD
RS	Request to Send	RS
CS	Clear to Send	CS
SG	Signal Ground	SG

<Using AFPX-COM2> 2channel RS232C type

Computer side (D-SUB 9-pin)

Symbol	Pin no.
CD	1
RD	2
SD	3
ER	4
SG	5
DR	6
RS	7
CS	8
RI	9

FP-X side (5-pin terminal)

Pin name	Signal name	Abbre.
S1	Send Data 1	SD
R1	Receive Data 1	RD
S2	Send Data 2	SD
R2	Receive Data 2	RD
SG	Signal Ground	SG

(To other device)

<Using AFPX-COM3 (RS422 setting)> (1-channel RS485/RS422 type)

Computer side (Converter)

Symbol
RD+
RD−
SD+
SD−

FP-X side (5-pin terminal)

Pin name	Signal name	Abbre.
S+	SD+	S+
S−	SD−	S−
R+	RD+	R+
R−	RD−	R−
	Not used	

Note) There are several names for the signal names of RS422. Confirm with the instruction manuals for each devices.

<Using AFPX-COM4> (Combination of 1-channel RS485 and 1-channel RS422 type)

Computer side (D-SUB 9-pin)

Symbol	Pin no.
CD	1
RD	2
SD	3
ER	4
SG	5
DR	6
RS	7
CS	8
RI	9

(To other device)

FP-X side (5-pin terminal)

Pin name	Signal name	Abbre.
+	Transmission line (+)	+
−	Transmission line (-)	−
SD	Send Data	SD
RD	Receive Data	RD
SG	Signal Ground	SG

<Using AFPX-COM5> (Combination of Ethernet and 1-channel RS232C type)

Computer side (D-SUB 9-pin)

Symbol	Pin no.
CD	1
RD	2
SD	3
ER	4
SG	5
DR	6
RS	7
CS	8
RI	9

FP-X side (5-pin terminal)

Pin name	Signal name	Abbre.
SD	Send Data	SD
RD	Receive Data	RD
SG	Signal Ground	SG

Ramco National www.PanasonicSensors.com 1-800-280-6933

1:1 communication with programmable display GT series

Overview

A 1:1 computer link with a programmable display connects the FP-X and the programmable display using an RS232C cable. Communication is performed via commands from the programmable display and responses from the PLC.

No program is required for communication. Simply set the mutual communications settings to operate the PLC via the programmable display.

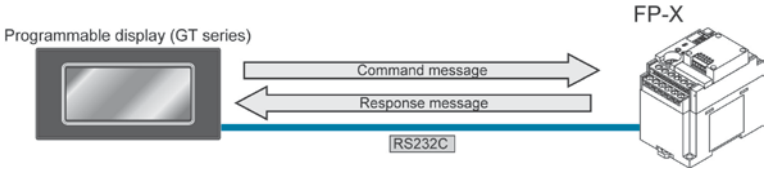

<Using AFPX-COM1> 1-channel RS232C type

GT series side

Symbol
SD
RD
RS
CS
SG

FP-X side (5-pin terminal)

Pin name	Signal name	Abbre.
SD	Send Data	SD
RD	Receive Data	RD
RS	Request to Send	RS
CS	Clear to Send	CS
SG	Signal Ground	SG

<Using AFPX-COM2> 2channel RS232C type

GT series side

Symbol
SD
RD
RS
CS
SG

FP-X side (5-pin terminal)

Pin name	Signal name	Abbre.
S1	Send Data 1	SD
R1	Receive Data 1	RD
S2	Send Data 2	SD
R2	Receive Data 2	RD
SG	Signal Ground	SG

(To other device)

<Using AFPX-COM3 (RS422 setting)> (1-channel RS485/RS232C type)

GT series side

To power supply

Symbol
+5V or 24V
GND
NC
+SD
−SD
+RD
−RD
Terminal setting

FP-X side (5-pin terminal)

Pin Name	Signal Name	Abbre.
S+	Send Data (+)	SD+
S−	Send Data (−)	SD−
R+	Receive Data(+)	RD+
R−	Receive Data (−)	RD−
	Not used	

<Using AFPX-COM4> (Combination of 1-channel RS485 and 1-channel RS232C type)

(To other device)

GT series side

Symbol
SD
RD
RS
CS
SG

FP-X side (5-pin terminal)

Pin name	Signal name	Abbre.
+	Transmission line (+)	+
−	Transmission line (-)	−
SD	Send Data	SD
RD	Receive Data	RD
SG	Signal Ground	SG

<Using AFPX-COM5> (Combination of Ethernet and 1-channel RS232C type)

GT series side

Symbol
SD
RD
RS
CS
SG

FP-X side (5-pin terminal)

Pin name	Signal name	Abbre.
SD	Send Data	SD
RD	Receive Data	RD
SG	Signal Ground	SG

Ramco National www.PanasonicSensors.com 1-800-280-6933

7.3.3 1:N Communication (Computer Link)

Overview

For a 1:N computer link, the computer and the FP-X are connected through a commercially available RS232C-RS485 converter, and the respective PLCs are wired using an RS485 cable.
The computer and the PLC communicate via commands and responses: The computer sends a command specifying the unit number, and the PLC with that unit number sends a response back to the computer.

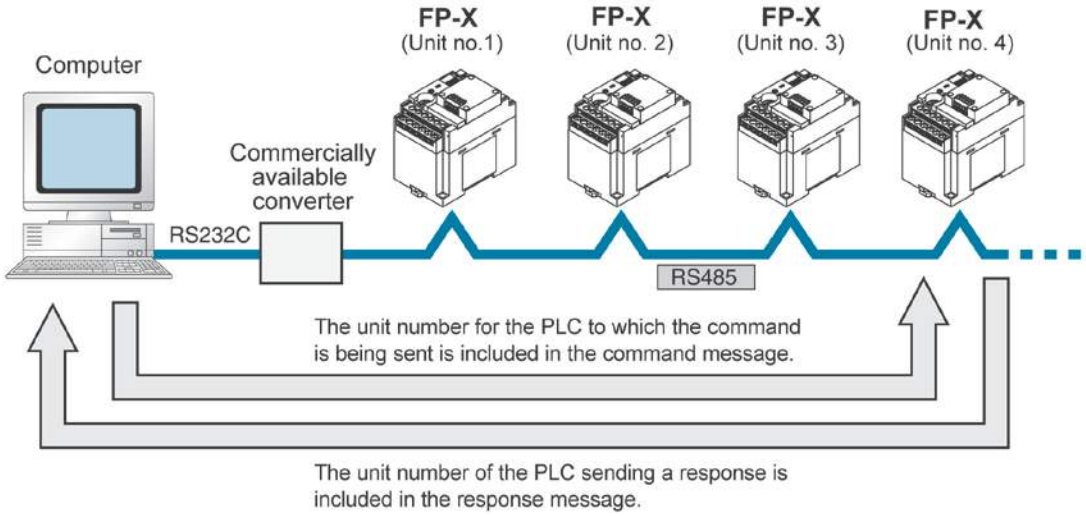

Note) Lineeye SI-35 is recommended to be used as a converter.

Setting system registers

Setting of COM1 port

No.	Name	Set value
No. 410	Unit number for COM1 port	1 to 99 (Set the desired unit number) (With a C-NET adapter, a maximum of 32 units (stations) can be specified.)
No. 412	Selection of communication mode for COM1 port	Computer link
No. 413	Communication format for COM1 port	Data length: …… 7 bits/8 bits Parity check: ….. None/Odd/Even Stop bit: …… 1 bit/2 bit Terminator: …….. CR Header: …… STX not exist
No. 415	Baud rate setting for COM1 port Note3)	2400 to 115200 bps

Note1) The communication format and baud rate (communication speed) should be set to match the connected computer.

Note2) The terminal units of the AFPX-COM3, AFPX-COM4 and AFPX-COM6 are specified by the dip switch in the communication cassette.

Note3) The baud rates of 300, 600 and 1200 bps can be specified by the SYS1 instruction. However, the setting value of the system register cannot be changed.

Ramco National www.PanasonicSensors.com 1-800-280-6933

Setting of unit numbers

By default, the unit number for each communication port is set to 1 in the system register settings. There is no need to change this for 1:1 communication, but if 1:N communication is used to connect multiple PLCs to the transmission line (e.g. in a C-NET), the unit number must be specified so that the destination of the command can be identified.

The unit number is specified by using the system register.

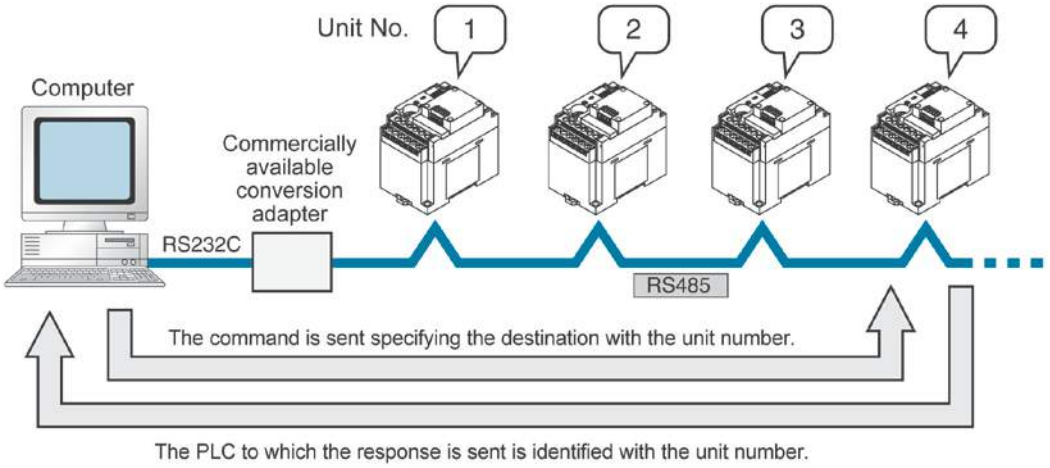

Setting unit numbers with the system register

A unit number between 1 and 99 can be set with the system register.

To set unit numbers with the FPWIN GR programming software:

Select “Options” in the menu bar, and then select “PLC Configuration”. Click “COM Port”. There are separate tabs for setting the COM1 and COM2 .

Dialog box of PLC system register setting

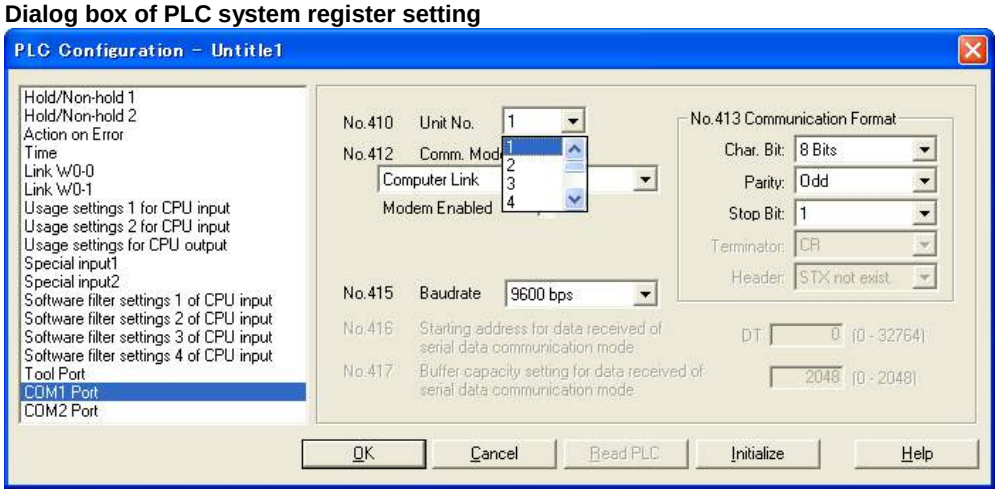

No. 410 (for COM1 port), No. 411 (for COM2 port) unit number settings

Click on [▼], and select a unit number from 1 to 99.

Note) With a C-NET adapter, a maximum of 32 units (stations) can be specified.

Ramco National www.PanasonicSensors.com 1-800-280-6933

Connection with external devices
AFPX-COM3 (when setting RS485)
Connection diagram

FP-X side (5-pin terminal)

Pin name	Signal name	Abbre.
S+	Transmission line 1 (+)	S+
S−	Transmission line 1 (−)	S−
R+	−	−
R−	−	−
−	−	−

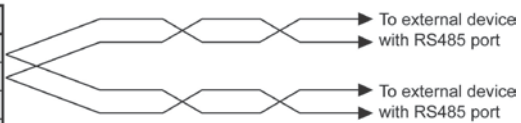

Wiring should extend from one unit to the next.
Never run two wires from a single unit to two other units.

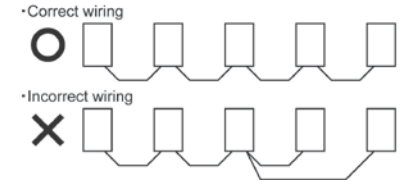

With 1:N communication, the various RS485 devices are connected using twisted pair cables. Use only one (+) and (-) terminals.

AFPX-COM4
Connection diagram

FP-X side (5-pin terminal)

Pin name	Signal name	Abbre.
+	Transmission line 1 (+)	+
−	Transmission line 1 (-)	−
SD	Send Data	SD
RD	Receive Data	RD
SG	Signal Ground	SG

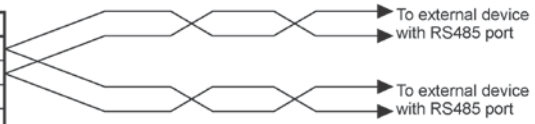

In case of using the AFPX-COM4, connect two cables each to the (+) terminal and (-) terminal.
Use the wires of the same cross-sectional area which should be 0.5 mm^2.

AFPX-COM6
Connection diagram

FP-X side (5-pin terminal)

Pin name	Signal name	Abbre.
+(COM1)	Transmission line 1 (+)	+
−(COM1)	Transmission line 1 (-)	−
+(COM2)	Transmission line 1 (+)	+
−(COM2)	Transmission line 1 (-)	−
—	—	—

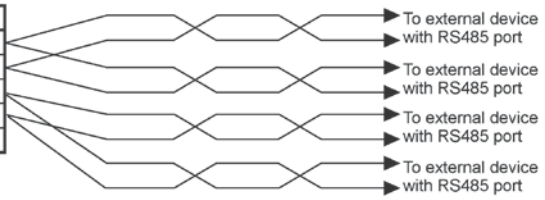

In case of using the AFPX-COM6, connect two cables each to the (+) terminal and (-) terminal.
Use the wires of the same cross-sectional area which should be 0.5 mm^2.
Note) Non-insulated between the COM1 and COM2.

Setting of terminal unit
The terminal unit is specified with the dip switch located in the communication cassette.

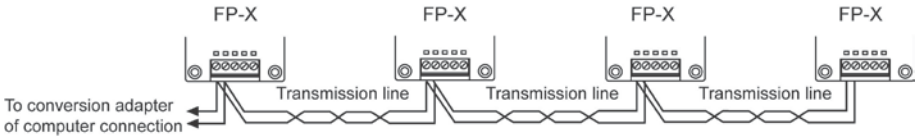

Ramco National www.PanasonicSensors.com 1-800-280-6933

7.3.4 MEWTOCOL Master (Sample Program)

Use the F145 (SEND) “Data send” or F146 (RECV) “Data receive” instruction to use the MEWTOCOL master function.

Sample program

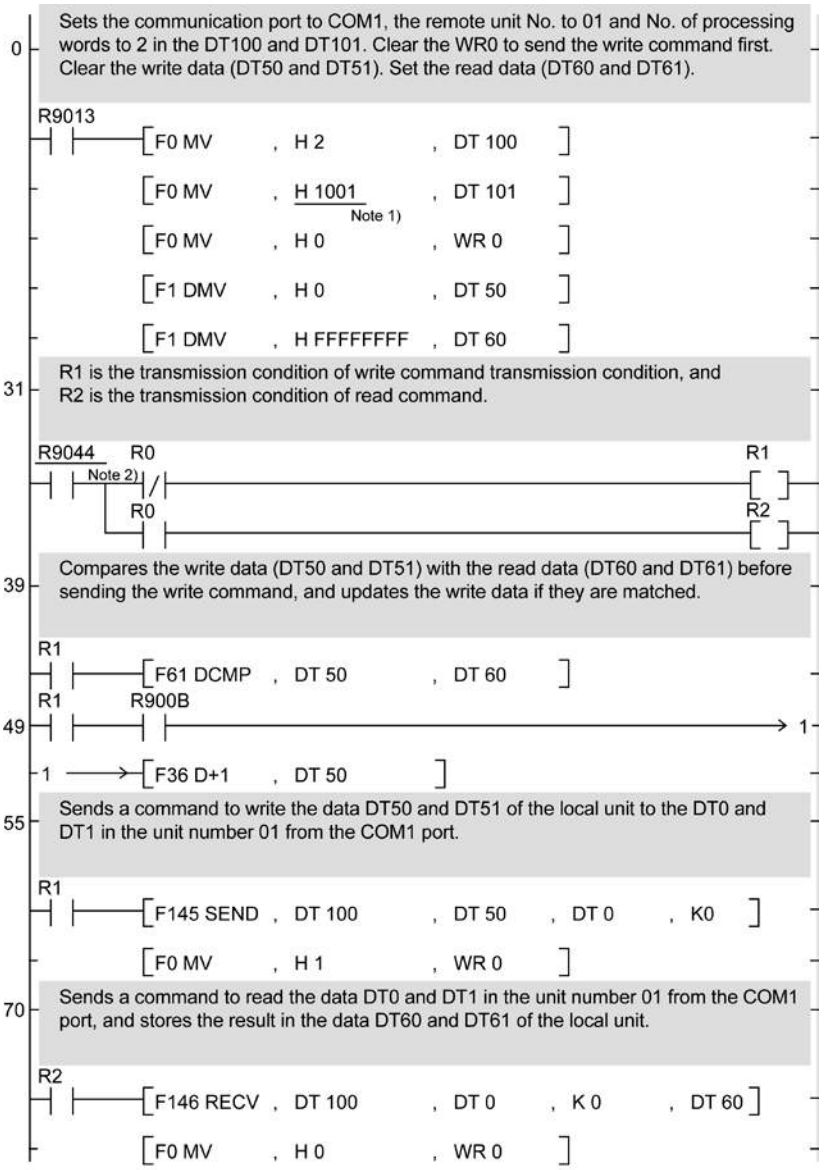

Note1) It is H2001 for COM2 port.
Note2) It is R904A for COM2 port.

Note: Available for the transistor type and relay type Ver 1.21 or later version only.

Ramco National www.PanasonicSensors.com 1-800-280-6933

Flow chart

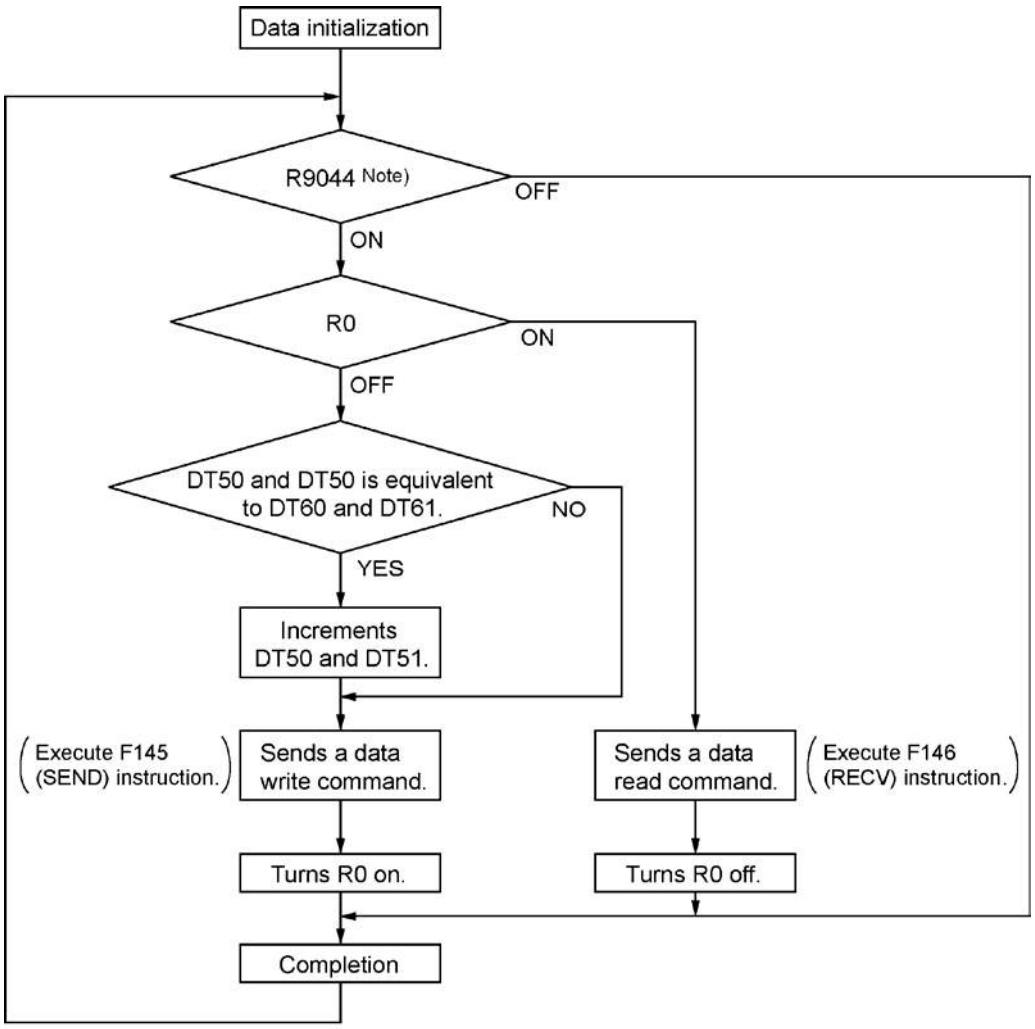

Note) It is R904A for COM2 port.

The above program executes the operation 1 to 3 repeatedly.

1. Updates the write data if the write data (DT50 and DT51) and the read data (DT60 and DT61) are matched.
2. Writes the DT50 and DT51 of the local unit into the data DT0 and DT1 in the unit number 1 from the COM1 port.
3. Reads the data DT0 and dT1 in the unit number 1 into the data DT60 and DT61 of the local unit from the COM1 port.

Note) The above COM1 port will be COM2 port for the COM2 port.

Ramco National www.PanasonicSensors.com 1-800-280-6933

7.4 Communication Function 2: General-purpose Serial Communication

7.4.1 General-purpose Serial Communication

Overview

- In general-purpose serial communication, data is sent and received over the COM ports to and from an external device such as an image processing device or a bar code reader.
- Data is read from and written to an external device connected to the COM port by means of an FP-X program and the FP-X data registers.

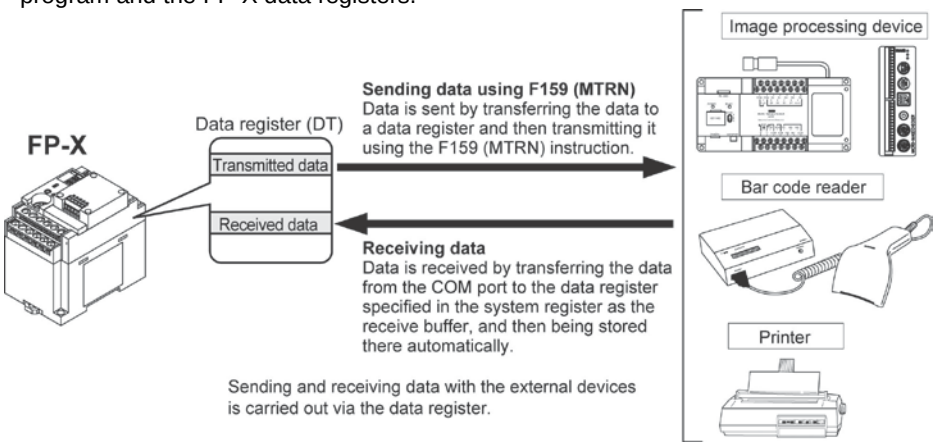

Outline of operation

To send data to and receive it from an external device using the general-purpose serial communication function, the data transmission and data reception functions described below are used. The F159 (MTRN) instruction and the “reception done” flag are used in these operations, to transfer data between the FPΣ and an external device.

Sending data

Data to be transmitted from the PLC is stored in the data register used as the send buffer (DT). When F159 (MTRN) is executed, the data is output from the COM port.

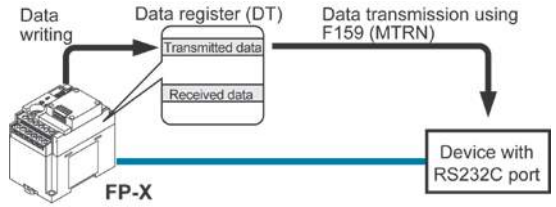

- The terminator specified in the system register is automatically added to the data that has been sent.
- The maximum volume of data that can be sent is 2048 bytes.

Receiving data

Data received from the COM port is stored in the receive buffer specified in the system register, and the “reception done” flag goes on. Data can be received whenever the “reception done” flag is off.

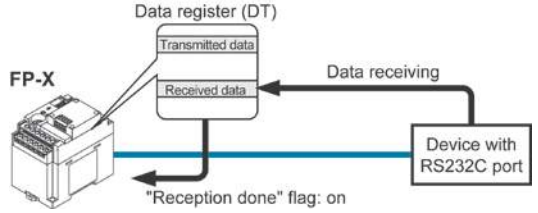

- When data is being received, the “reception done” flag is controlled by the F159 (MTRN) instruction.
- No terminator is included in the stored data.
- The maximum volume of data that can be received is 4096 bytes.

Ramco National www.PanasonicSensors.com 1-800-280-6933

Setting communication parameters in the general-purpose serial communication mode

By default, the COM port is set to “Computer link”. System register settings should be entered for the following items.

The settings for baud rate and communication format are made using the FPWIN GR programming tool. Select “Options” in the menu bar, and then select “PLC Configuration”. Click “COM Port”. There are separate tabs for setting the COM1 and COM2.

Dialog box of PLC system register setting

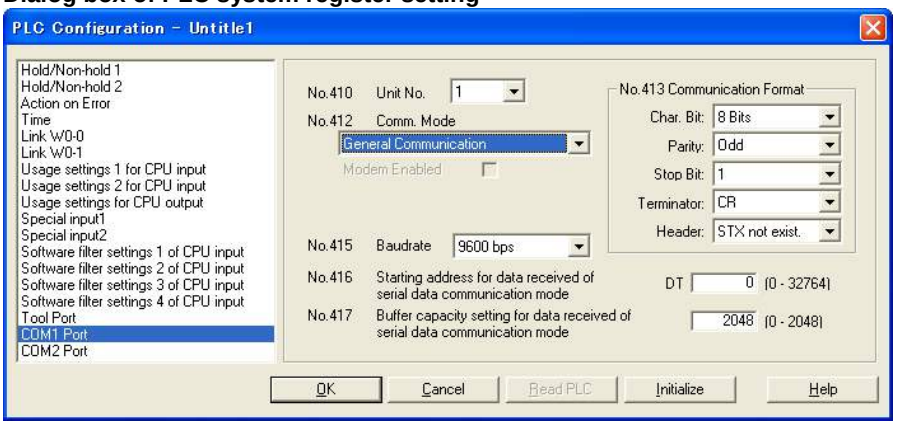

No. 412 Communication Mode

Select the COM port operation mode:

Click on ▼, and select “General Communication”.

No. 413 (for COM1 port), No. 414 (for COM2 port) Communication Format setting

Default setting:

Char. Bit ……. 8 bits

Parity ……. Odd

Stop Bit ……. 1 bit

Terminator ……. CR

Header ……. STX not exist

Enter the appropriate settings to match the communication format of the external device connected to the COM port..

No. 415 Baud rate (communication speed) setting

The default setting for the communication speed for the various ports is 9600 bps. Change the value to match the external device connected to the COM port:

Click on ▼, and select one of the values from 2400, 4800, 9600, 19200, 38400, 57600 and 115200 bps.

No. 416 (for COM1 port), No. 418 (for COM2 port) Starting address for data received

No. 417 (for COM1 port), No. 419 (for COM2 port) Buffer capacity setting for data received

To change this area, specify the starting address using system register no. 416 (no. 418 for COM2 port) and the volume (number of words) using no. 417 (no. 419 for COM2 port). The receive buffer layout is shown below.

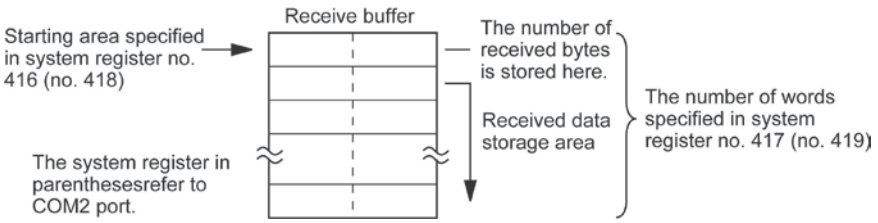

Ramco National www.PanasonicSensors.com 1-800-280-6933

7.4.2 Communication with External Devices

Programming example of general-purpose serial communication

The F159 (MTRN) instruction is used to send and receive data via the specified COM port. F159 (MTRN) F144 (TRNS) instruction is not available with the FP-X.

F159 (MTRN) instruction

Data is sent and received via the specified COM port .

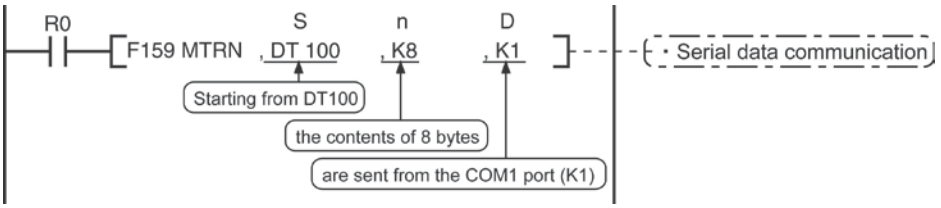

Devices that can be specified for S:	Only data registers (DT) can be specified as the send buffer.
Devices that can be specified for n:	WX, WY, WR, WL, SV, EV, DT, LD, I (I0 to ID), K, H
Devices that can be specified for D:	Only the K constants (only K1 and K2)

Sending data

The amount of data specified by n is sent to the external device from among the data stored in the data table, starting with the area specified by S, through the COM port specified by D. Data can be sent with the header and terminator automatically attached. A maximum of 2048 bytes can be sent. When the above program is run, the eight bytes of data contained in DT101 to DT104 and stored in the send buffer starting from DT100 are sent from COM1 port.

Receiving data

Reception of data is controlled by turning the “reception done” flags R9038/R9048 on and off. The received data is stored in the receive buffer specified in the system register. Data can be received when F159 (MTRN) turns the “reception done” flag off. When the reception of the data is completed (the terminator is received), the “reception done” flag turns on, and subsequently, receiving data is prohibited. To receive the next data, execute the F159 (MTRN) instruction and turn the “reception done” flag off to clear the number of received bytes to 0. To receive data continuously without sending data, clear the number of transmitted bytes to 0 (set “n” to “K0”), and then execute the F159 (MTRN) instruction.

Reference: <Programming Manual ARCT1F313E>

Binary communication

Selecting “STX not exist” for the header and “None” for the terminator in the general-purpose serial communication enables the binary communication.

Sending data: Sends the data of bytes to be specified.

Receiving data: Check the No. of bytes received before the process. At that time, the reception done flag does not work.

Ramco National www.PanasonicSensors.com 1-800-280-6933

Sending data to external devices

Communication with external devices is handled through the data registers.

Data to be output is stored in the data register used as the send buffer (DT), and when the F159 (MTRN) instruction is executed, the data is output from the COM port.

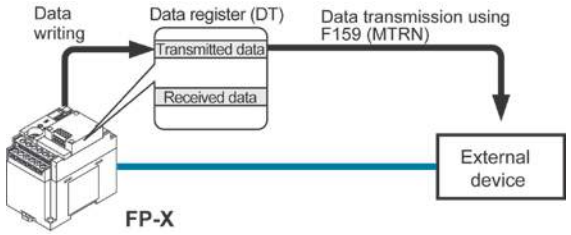

Data table for transmission (send buffer)

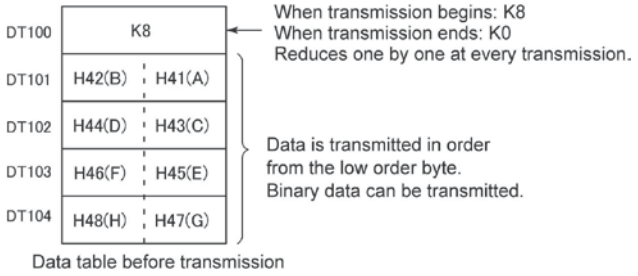

Sample program for sending data

The following program transmits the characters “ABCDEFGH (Hex)” to an external device using COM1 port.

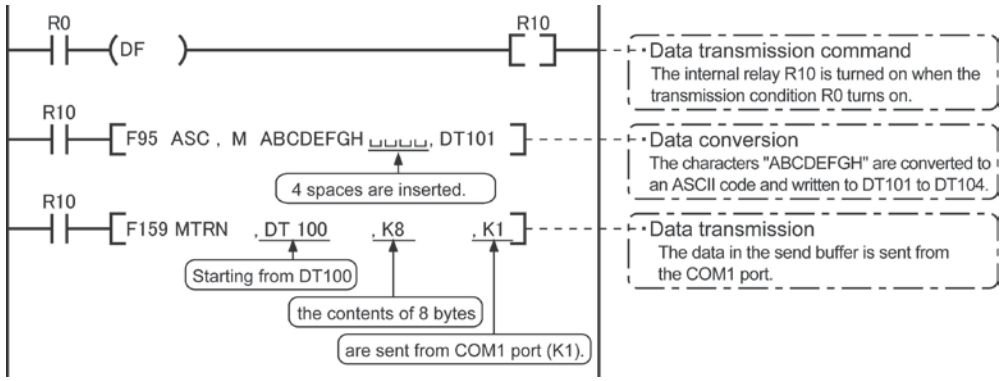

The program described above is executed in the following sequence.

1) “ABCDEFGH” is converted to an ASCII code and stored in a data register.

2) The data is sent from COM1 port using the F159 (MTRN) instruction.

Explanatory diagram

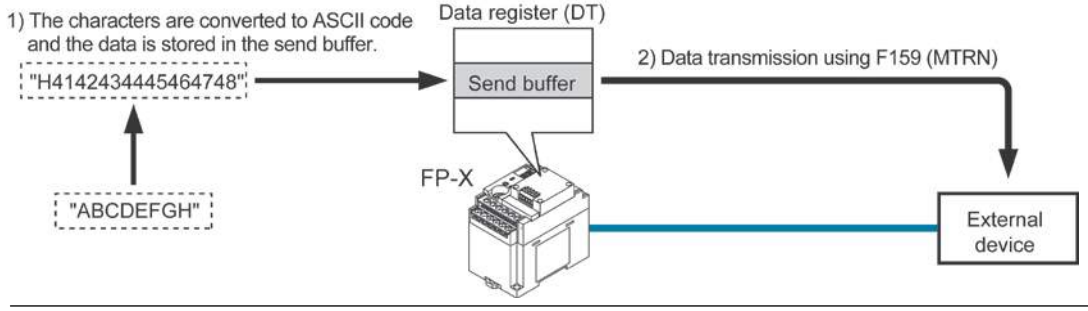

Ramco National www.PanasonicSensors.com 1-800-280-6933

Explanation of data table

The data table for transmission starts at the data register specified in S.

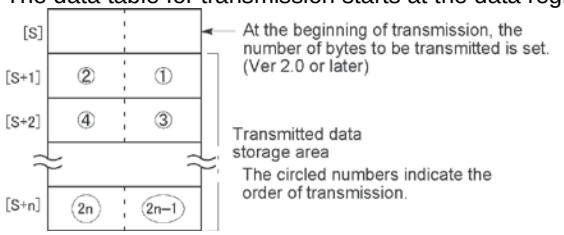

- Use an F0 (MV) or F95 (ASC) instruction to write the data to be transmitted to the transmission data storage area specified in S.

Transmission process

When the execution condition of the F159 (MTRN) instruction turns on and the "transmission done" flag R9039/R9049 is on, operation is as follows:

1. N is preset in S. The "reception done" flag R9038/R9048 is turned off, and the reception data number is cleared to 0.
2. The set data is transmitted in order from the lower-order byte in S+1 of the table.

- During transmission, the "transmission done" flag R9039/R9049 turns off.
- If system register 413 or 414 is set to header (start code) with STX, the header is automatically added to the beginning of the data.
- The terminator (end code) specified in system register 413 or 414 is automatically added to the end of the data.

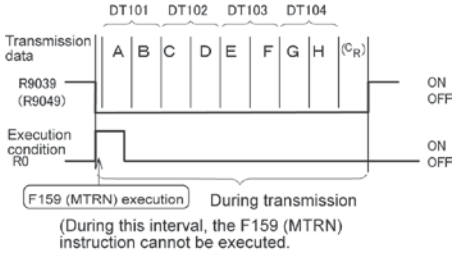

3. When all of the specified quantity of data has been transmitted, the S value is cleared to 0 and the "transmission done" flag R9039/R9049 turns on.

When you do not wish to add the terminator (end code) during transmissions:

- Specify the number of bytes to be transmitted using a negative number.
- If you also do not wish to add a terminator to received data, set system register 413 or 414 to "Terminator - None".

Programming example:

The following program transmits 8 bytes of data without adding the terminator.

Key Point:

- Do not include the terminator (end code) in the transmission data. The terminator is added automatically.
- When "STX exist" is specified for the header (start code) in system register 413 or 414, do not add the header to the transmission data. The header is added automatically.
- When using the AFPX-COM1, transmission does not take place until CS (Clear to Send) turns on. If you are not going to connect to the other device, connect to RS (Request to Send).
- The maximum number of transmission bytes n is 2048.
- The contact numbers in parentheses refer to COM2 port.

Ramco National www.PanasonicSensors.com 1-800-280-6933

Receiving data from external devices

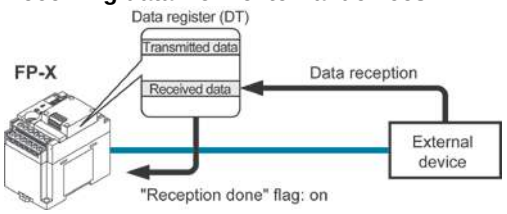

Data input from the COM port is stored in the receive buffer specified by the system register, and the “reception done” flag goes on. If the “reception done” flag is off, data can be received at any time.

Data table for reception (receive buffer)

This is the state when the above program is executed.

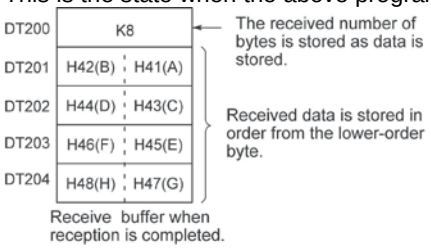

- DT200 to DT204 are used as the receive buffer. System register settings are as follows:
  - System register 416: K200
  - System register 417: K5

Sample program for receiving data

8-byte data received in the receive buffer through COM1 port are copied to DT0.

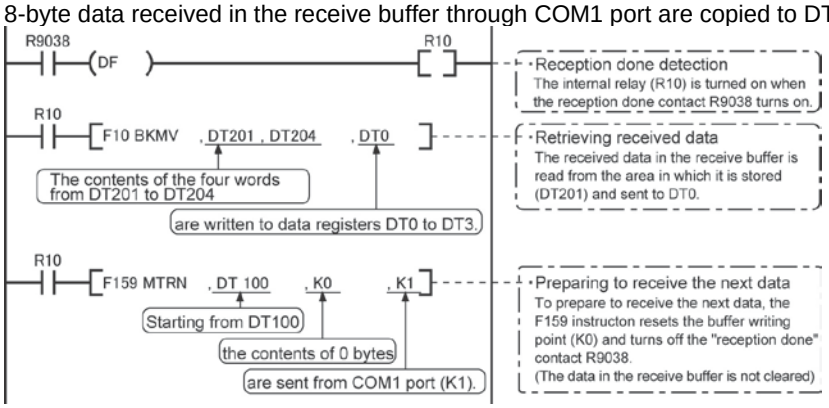

The program described above is executed in the following sequence.

1) The data sent from external devices is stored in the receive buffer.
2) The “reception done” contact R9038 (R9048) is turned on.
3) The received data is sent from the receive buffer to the area starting with data register DT0.
4) The F159 (MTRN) instruction is executed with no data to reset the buffer writing point and to turn off the reception done” contact R9038 (R9048). The system is now ready to receive the next data. (The data in the receive buffer is not cleared.)

Note:

- Be aware that the “reception done” flag R9038 or R9048 changes even while a scan is in progress (e.g., if the “reception done” flag is used multiple times as an input condition, there is a possibility of different statuses existing within the same scan.) To prevent multiple read access to the special internal relay you should generate a copy of it at the beginning of the program.

Explanatory diagram

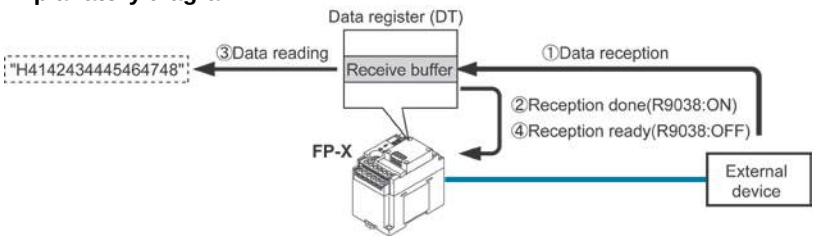

Ramco National www.PanasonicSensors.com 1-800-280-6933

Explanation of data table

Data sent from an external device connected to the COM port is stored in the data registers that have been set as the receive buffer.

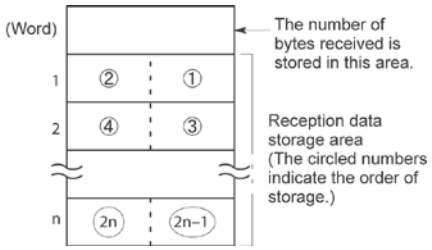

- Specify the data registers in system register 416 to 419.
- The number of bytes of data received is stored in the starting address of the receive buffer. The initial value is 0.
- Received data is stored in the received data storage area in order from the lower -order byte.

Reception process

When the “reception done” flag R9038 (R9048) is off, operation takes place as follows when data is sent from an external device. (The R9038 (R9048) flag is off during the first scan after RUN).

1. Incoming data is stored in order from the lower-order byte of the 2nd-word area of the receive buffer. Header and terminator (start and end codes) are not stored.

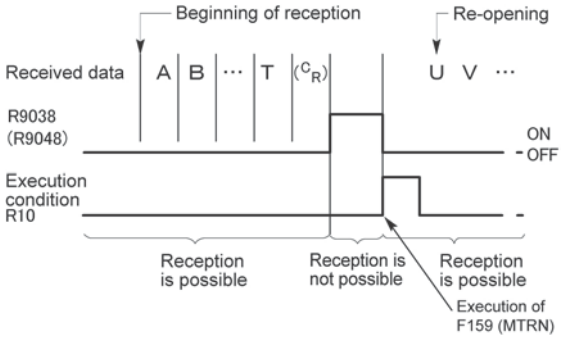

2. When the terminator (end code) is received, the “reception done” flag R9038 (R9048) turns on. Reception of any further data is prohibited. When the terminator has been set to “None”, the “reception done” flag does not turn on. Check the number of received bytes to judge whether the reception has completed or not.
3. When an F159 (MTRN) instruction is executed, the “reception done” flag R9038 (R9048) turns off (except the case when the terminator has been set to “None”), the number of received bytes is cleared, and subsequent data is stored in order from the lower-order byte.

For repeated reception of data, perform the following steps:

1. Receive data
2. Reception done (R9038/R9048: on, reception prohibited)
3. Process received data
4. Execute F159 (MTRN) (R9038/R9048: off, reception possible)
5. Receive subsequent data

Prepare for reception

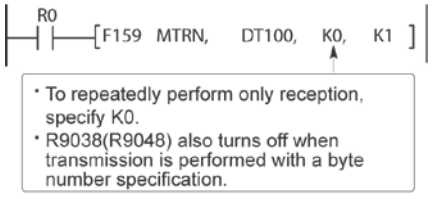

- The “reception done” flag R9038 (R9048) turns on when data reception from the external device is completed. Reception of any further data is prohibited.
- To receive subsequent data, you must execute the F159 (MTRN) instruction to turn off the “reception done” flag R9038 (R9048).

Key Point:

- The contact numbers in parentheses refer to COM2 port.

Ramco National www.PanasonicSensors.com 1-800-280-6933

Data to be sent/received with FP-X

Remember the following when accessing data in the FP-X send and receive buffers:

- If a header has been chosen in the communication format settings, the code STX (H02) will automatically be added at the beginning of the data begin sent.
- The data without the Code STX at the reception is stored in the receive buffer, and the “reception done” flag turns on when the terminator (end code) is received. When the terminator has been set to “None”, the “reception done” flag does not work.
  However, if the code STX is added in the middle of the data, the number of received byte is cleared to 0, and the data is stored from the beginning of the receive buffer again.
- A terminator is automatically added to the end of the data being sent.
- There is no terminator on the data stored in the receive buffer.

Sending data:

Data written to the send buffer will be sent just as it is.

Example:

The data “12345” is transmitted as an ASCII code to an external device.

1. Data sent using the F95 (ASC) instruction should be converted to ASCII code data.

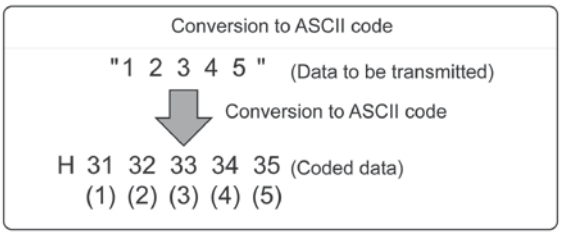

2. If DT100 is being used as the send buffer, data will be stored in sequential order in the data registers starting from the next register (DT101), in two-byte units consisting of the upper and the lower byte.

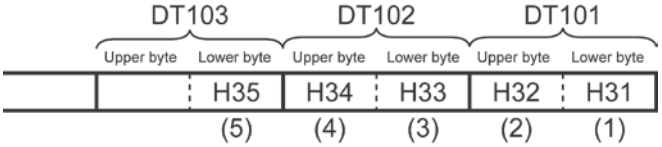

Receiving data:

The data of the receive area being read is ASCII code data.

Example:

The data “12345$^{C}_{R}$” is transmitted from a device with RS232C port.

- If DT200 is being used as the receive buffer, received data will be stored in the registers starting from DT201, in sequential order of first the lower byte and then the upper byte.

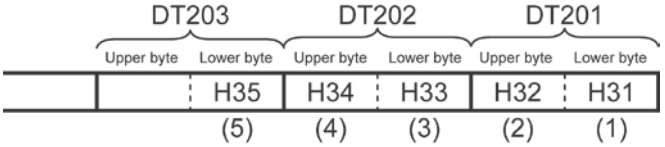

Ramco National www.PanasonicSensors.com 1-800-280-6933

Flag operation in serial communication
Header: No-STX, Terminator: CR
Receiving data:
The “reception done” flag, the “transmission done” flag, and the F159 (MTRN) instruction are related as follows:

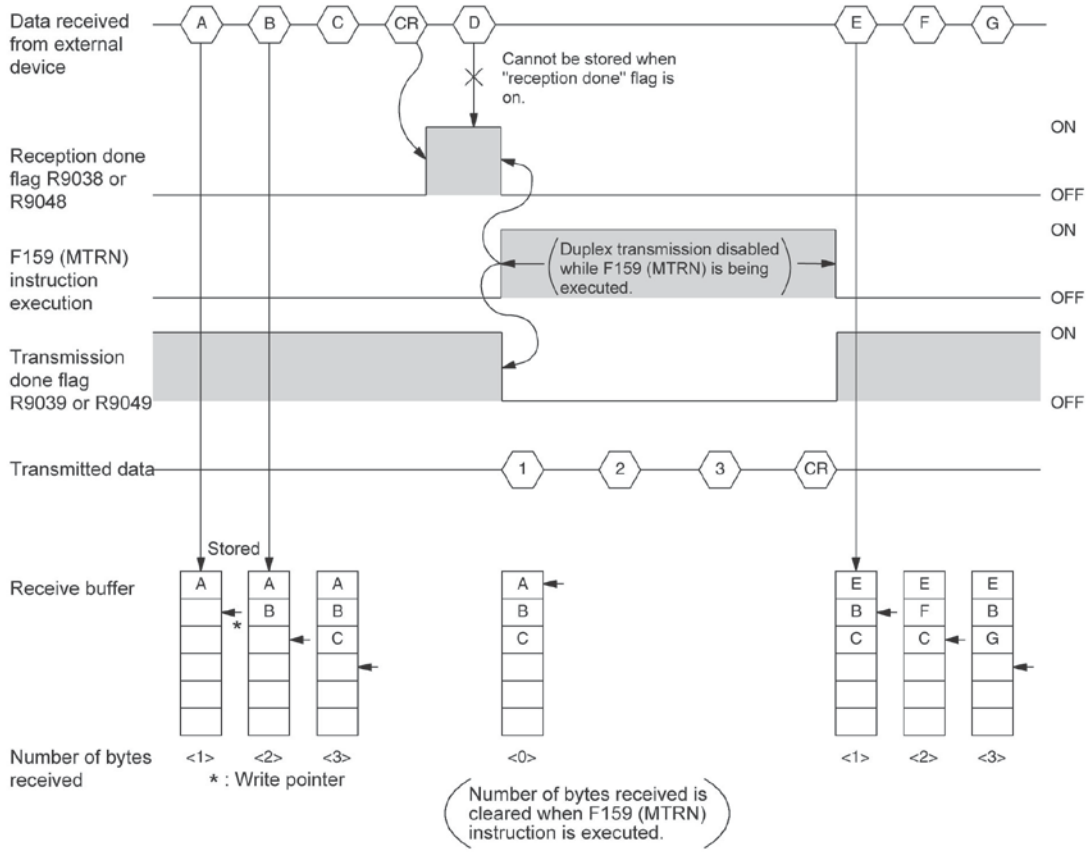

- For general-purpose serial communication, half-duplex transmission must be used.
- Reception is disabled when the “reception done” flag R9038 or R9048 is on.
- When F159 (MTRN) is executed, the number of bytes received is cleared, and the address (write pointer) in the receive buffer is reset to the initial address.
- Also, when F159 (MTRN) is executed, the error flag R9037 or R9047, the “reception done” flag R9038 or R9048 and the “transmission done” flag R9039 or R9049 goes off.
- Duplex transmission is disabled while F159 (MTRN) is being executed. The “transmission done” flag R9039 or R9049 must be observed.
- Reception stops if the error flag R9037 or R9047 goes on. To resume reception, execute the F159 (MTRN) instruction, which turns off the error flag.

Note:
- Be aware that the “reception done” flag R9038 or R9048 changes even while a scan is in progress (e.g., if the “reception done” flag is used multiple times as an input condition, there is a possibility of different statuses existing within the same scan.) To prevent multiple read access to the special internal relay you should generate a copy of it at the beginning of the program.

Key Point:
- The contact numbers in parentheses refer to COM2 port.

Ramco National www.PanasonicSensors.com 1-800-280-6933

Header: STX, Terminator: ETX

Receiving data:

The “reception done” flag, the “transmission done” flag, and the F159 (MTRN) instruction are related as follows:

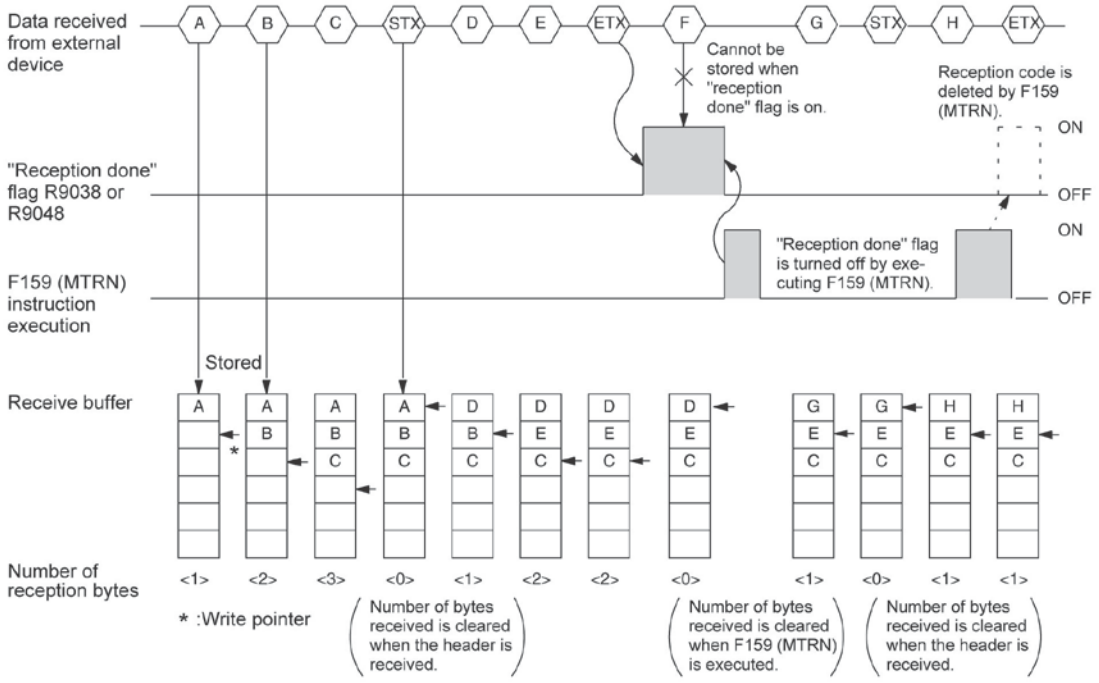

- The data is stored in the receive buffer in sequential order. When the header is received, the number of bytes received is cleared, and the address (write pointer) in the receive buffer is reset to the initial address.
- Reception is disabled while the “reception done” flag R9038 or R9048 is on.
- Also, When F159 (MTRN) is executed, the number of bytes received is cleared, and the address (write pointer) in the receive buffer is reset to the initial address.
- If there are two headers, data following the second header overwrites the data in the receive buffer.
- The “reception done” flag R9038 or R9048 is turned off by the F159 (MTRN) instruction. Therefore, if F159 (MTRN) is executed at the same time the terminator is received, the “reception done” flag will not be detected.

Ramco National www.PanasonicSensors.com 1-800-280-6933

Sending data:

The “reception done” flag, the “transmission done” flag, and the F159 (MTRN) instruction are related as follows:

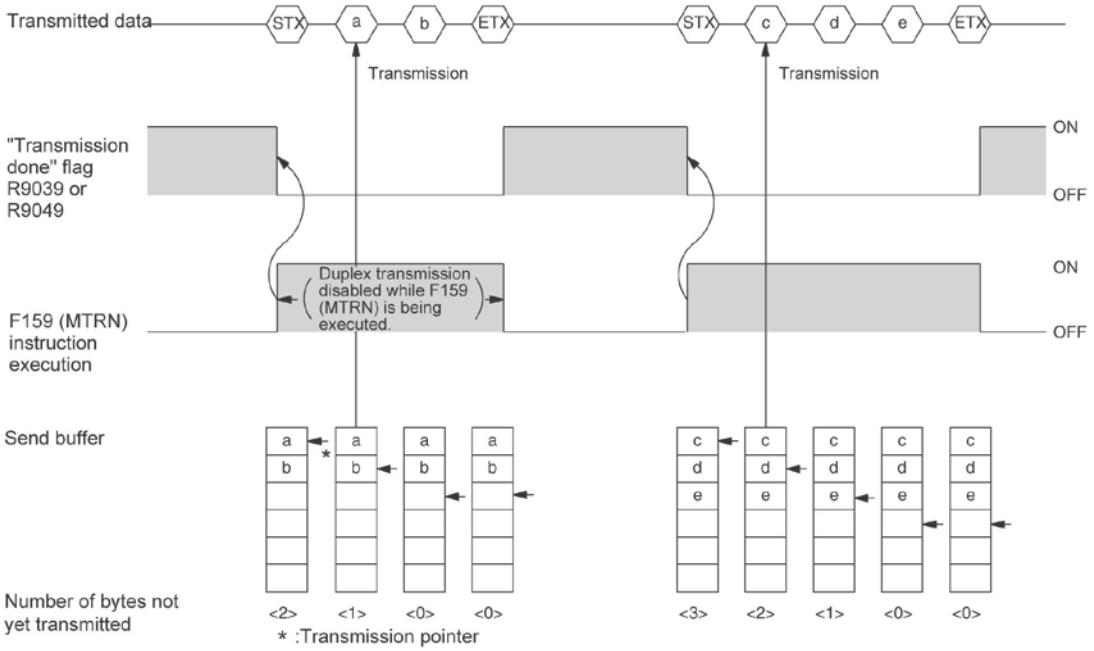

- Header (STX) and terminator (ETX) are automatically added to the data being transmitted. The data is transmitted to an external device.
- When the F159 (MTRN) instruction is executed, the “transmission done” flag R9039 or R9049 goes off.
- Duplex transmission is disabled while F159 (MTRN) is being executed. The “transmission done” flag R9039 or R9049 must be observed.

Key Point:

- The contact numbers in parentheses refer to COM2 port.

Ramco National www.PanasonicSensors.com 1-800-280-6933

Changing communication mode of COM port

An F159 (MTRN) instruction can be executed to change between general-purpose serial communication mode and computer link mode. To do so, specify H8000 for n (the number of transmission bytes) and execute the instruction.

Changing from “general-purpose” to “computer link”

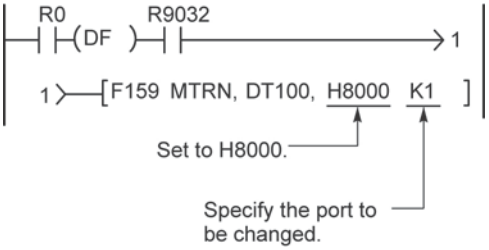

Changing from “computer link” to “general-purpose”

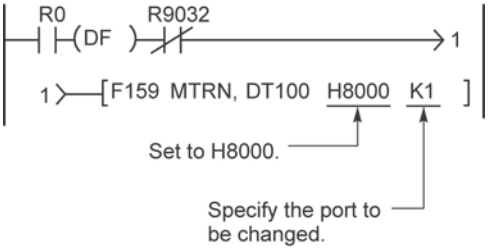

The COM port communication mode flag in R9032 or R9042 turns on when general-purpose serial communication mode is selected.

Note:

- When the power is turned on, the operating mode selected in system register no. 412 takes effect. It is not possible to change to the MODBUS RTU mode.

Ramco National www.PanasonicSensors.com 1-800-280-6933

7.4.3 Connection with 1:1 Communication (General-purpose serial communication)

System register settings

Settings for COM1 port (AFPX-COM1, AFPX-COM2, AFPX-COM3, AFPX-COM5)

No.	Name	Set Value
No. 412	Selection of communication mode for COM1 port	General-purpose serial communication
No. 413	Communication format for COM1 port	Data length: …… 7 bits/8 bits Parity check: ….. None/Odd/Even Stop bit: …… 1 bit/2 bits Terminator: …….. CR/CR+LF/None/ETX Header: …… No STX/STX
No. 415	Baud rate setting for COM1 port Note2)	2400 to 115200 bps
No. 416	Starting address for receive buffer for COM1 port	DT0 to DT32764 (Initial value: DT0) Note1)
No. 417	Receive buffer capacity for COM1 port	0 to 2048 words (Initial value: 2048 words)

Settings for COM2 port (AFPX-COM2, AFPX-COM4, AFPX-COM5, AFPX-COM6)

No.	Name	Set Value
No. 412	Selection of communication mode for COM2 port	General-purpose serial communication
No. 414	Communication format for COM2 port	Data length: …… 7 bits/8 bits Parity check: ….. None/Odd/Even Stop bit: …… 1 bit/2 bits Terminator: …….. CR/CR+LF/None/ETX Header: …… No STX/STX
No. 415	Baud rate setting for COM2 port Note2)	2400 to 115200 bps
No. 418	Starting address for receive buffer for COM2 port	DT0 to DT32764 (Initial value: DT2048) Note1)
No. 419	Receive buffer capacity for COM2 port	0 to 2048 words (Initial value: 2048 words)

Note1) When using the C14, the values are DT0 to DT12285.

Note2) The baud rates of 300, 600 and 1200 bps can be specified by the SYS1 instruction (Ver 2.0 or more). However, the setting value of the system register cannot be changed.

Note3) The setting values for the COM2 port of AFPX-COM6 are 9600 bps, 19200 bps and 115200 bps only. The same baud rate should be specified by the cassette backside switch and the system register.

Ramco National www.PanasonicSensors.com 1-800-280-6933

1:1 communication with FP Series PLC

Overview

Connect the FP-X and another FP series PLC using the RS232C interface and the MEWTOCOL-COM communication protocol.

Note: The MEWTOCOL master function of computer link is recommended as it is easy to communicate.

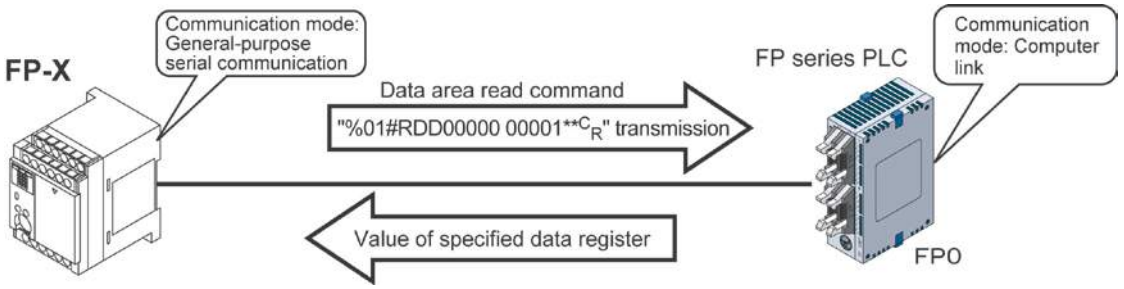

- When the data area read command "%01#RDD00000 00001**C_R" is sent from the FP-X side, the values of the data register of the PLC connected to the system are sent as a response. For example, if the value K100 is stored in DT0 and the value K200 is stored in DT1 of the PLC, "%01$RD6400C8006F C_R" is sent as a response to the command. If there is an error, "%01!○○** C_R" is returned (○○ is the error code).
- In addition to data area read and write commands, MEWTOCOL-COM also provides contact area read and write as well as many other commands.

System register settings of FP series PLCs (FP0 side)

In the default settings, the COM port is set not to be used. For 1:1 general-purpose serial communication, the system registers should be set as shown below.

Communication format settings for FP series PLC (FP0 side)

No.	Name	Set Value
No. 412	Selection of communication mode for COM port	Computer link
No. 413	Communication format for COM port	Data length: …… 8 bits Parity check: ….. Odd Stop bit: ……. 1 bit Terminator: …….. CR Header: ……. STX not exist Note) These settings should be the same as the settings of the connected FP-X.
No. 414	Baud rate setting for COM port	19200 bps

Ramco National www.PanasonicSensors.com 1-800-280-6933

Connection to FP series PLCs (FP0)
<Using AFPX-COM1> 1-channel RS232C type
- Connection with FP0 COM port

FP-X side (5-pin terminal)

Pin name	Signal name	Abbr.
SD	Send Data	SD
RD	Receive Data	RD
RS	Request to Send	RS
CS	Clear to Send	CS
SG	Signal Ground	SG

FP0 COM port side (3-pin terminal)

Symbol
S
R
G

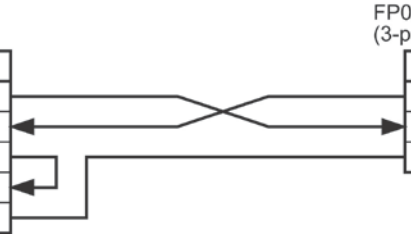

<Using AFPX-COM2> 2channel RS232C type
- Connection with FP0 COM port

FP-X side (5-pin terminal)

Pin name	Signal name	Abbr.
S1	Send Data 1	SD
R1	Receive Data 1	RD
S2	Send Data 2	SD
R2	Receive Data 2	RD
SG	Signal Ground	SG

FP0 COM port side (3-pin terminal)

Symbol
S
R
G

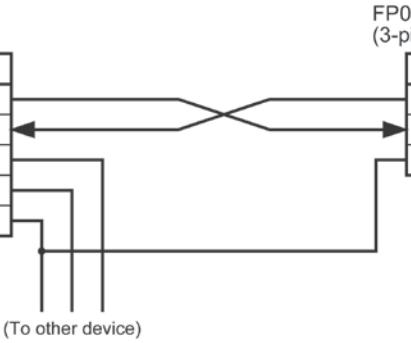

<Using AFPX-COM4> Combination of 1-channel RS485 and 1-channel RS232C type
- Connection with FP0 COM port

FP-X side (5-pin terminal)

Pin name	Signal name	Abbr.
+	Transmission Line (+)	+
−	Transmission Line (-)	−
SD	Send Data	SD
RD	Receive Data	RD
SG	Signal Ground	SG

FP0 COM port side (3-pin terminal)

Symbol
S
R
G

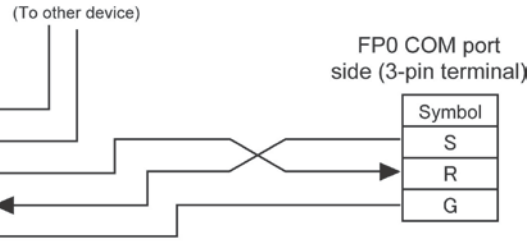

<Using AFPX-COM5> Combination of Ethernet and 1-channel RS232C type
- Connection with FP0 COM port

FP-X side (5-pin terminal)

Pin name	Signal name	Abbre.
SD	Send Data	SD
RD	Receive Data	RD
SG	Signal Ground	SG

FP0 COM port side (3-pin terminal)

Symbol
S
R
G

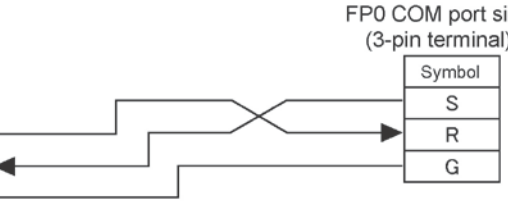

Ramco National www.PanasonicSensors.com 1-800-280-6933

Procedure of communication

In this example, an FP series PLC is connected to COM1 port. K100 and K200 are respectively being stored in DT0 and DT1 of the PLC on the other end.

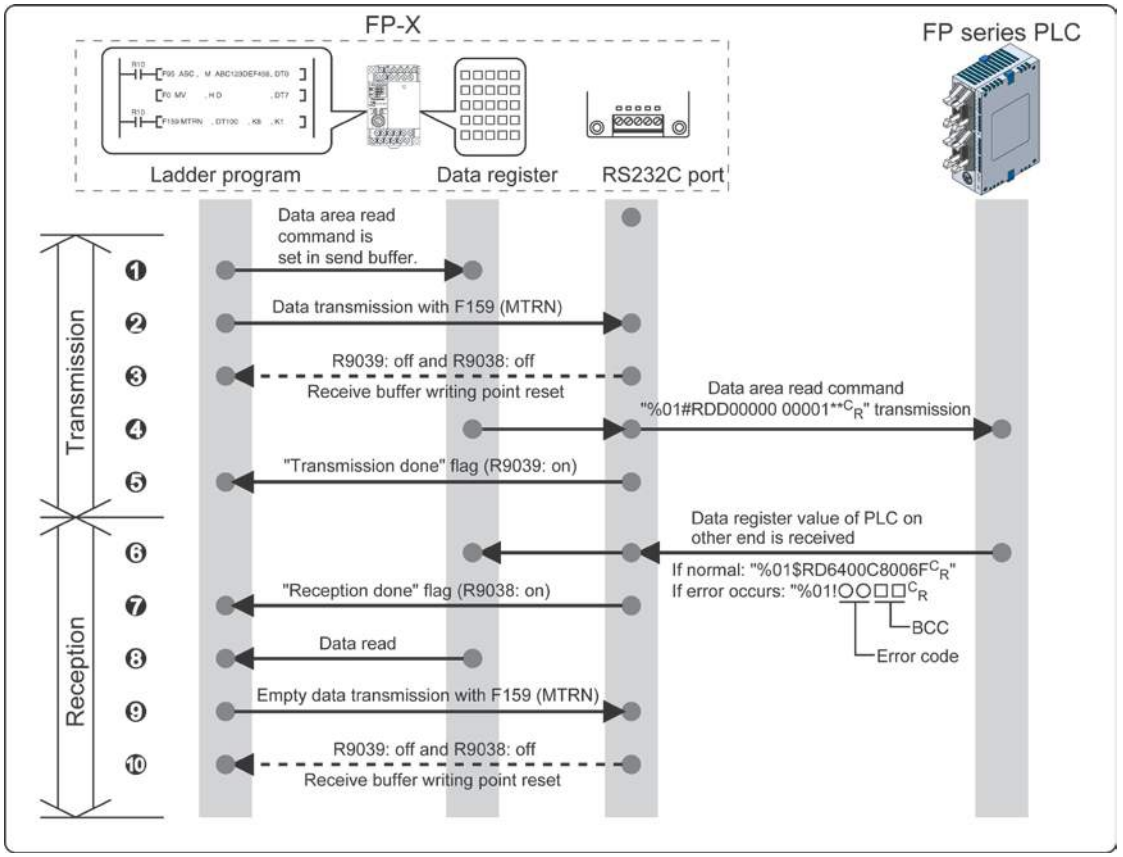

Ramco National www.PanasonicSensors.com 1-800-280-6933

Sample program

In the following example, the FP series PLC is connected to COM1 port.

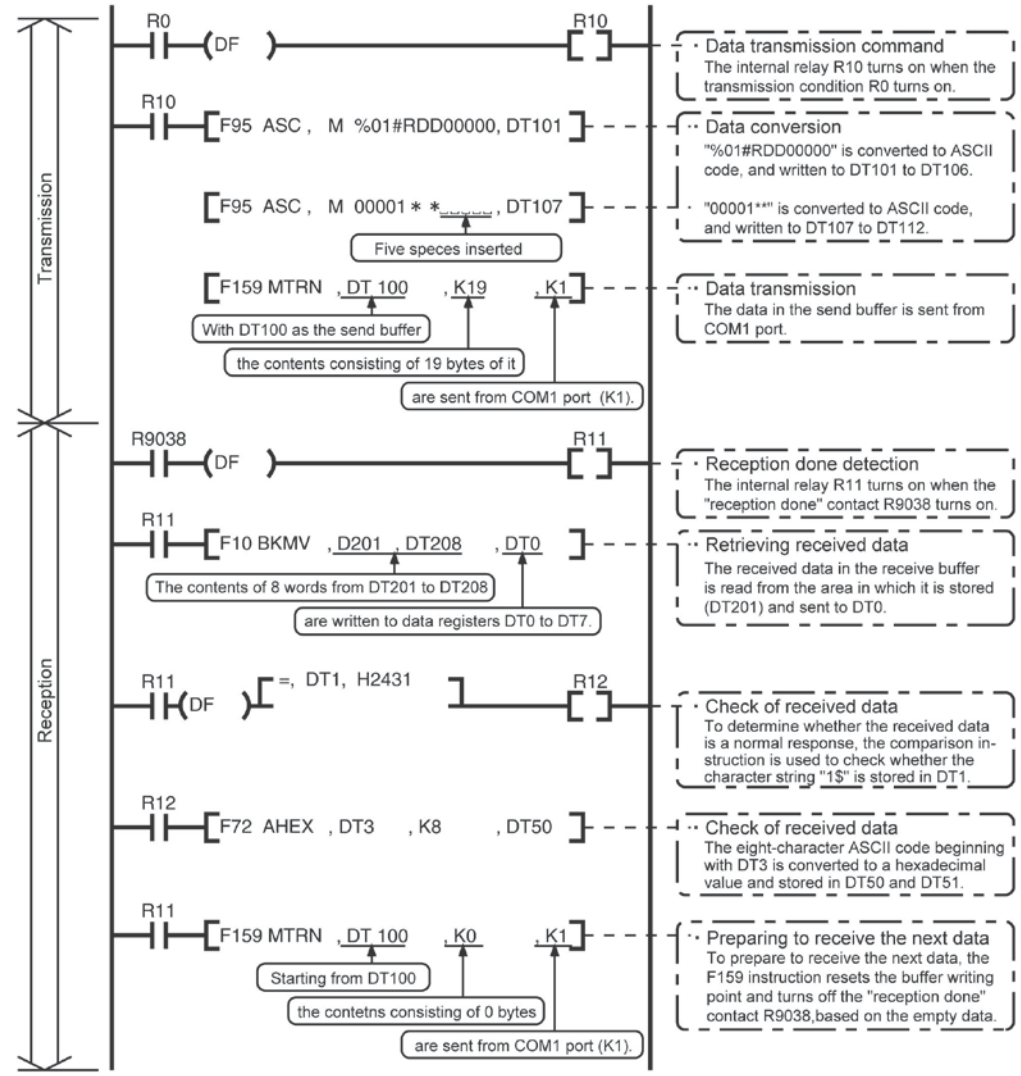

Buffer statuses

The tables below show the statuses of the send and receive buffers when the sample program is run.

Send buffer

K19	
H30 (0)	H25 (%)
H23 (#)	H31 (1)
H44 (D)	H52 (R)
H30 (0)	H44 (D)
H30 (0)	H30 (0)
H30 (0)	H30 (0)
H30 (0)	H30 (0)
H30 (0)	H30 (0)
H2A (＊)	H31 (1)
	H2A (＊)

← Number of bytes to be transmitted

(Set automatically when the instruction is executed)

Ver 2.0 or later

(Statuses before transmission)

Receive buffer

K16	
H30 (0)	H25 (%)
H24 ($)	H31 (1)
H44 (D)	H52 (R)
H34 (4)	H36 (6)
H30 (0)	H30 (0)
H38 (8)	H43 (C)
H30 (0)	H30 (0)
H46 (F)	H36 (6)

← Number of bytes received

Received data is stored in order from the lower-order byte.

(Statuses when reception is completed)

Ramco National www.PanasonicSensors.com 1-800-280-6933

Key Point:

Contents of the response:

If K100 is stored in DT0 and K200 is stored in DT1 of the FP series PLC on the other end, "%01$RD6400C8006F$C_R$" is returned from the FP series PLC on the other end as the response when the program is executed. The received data is stored in the data registers as shown below.

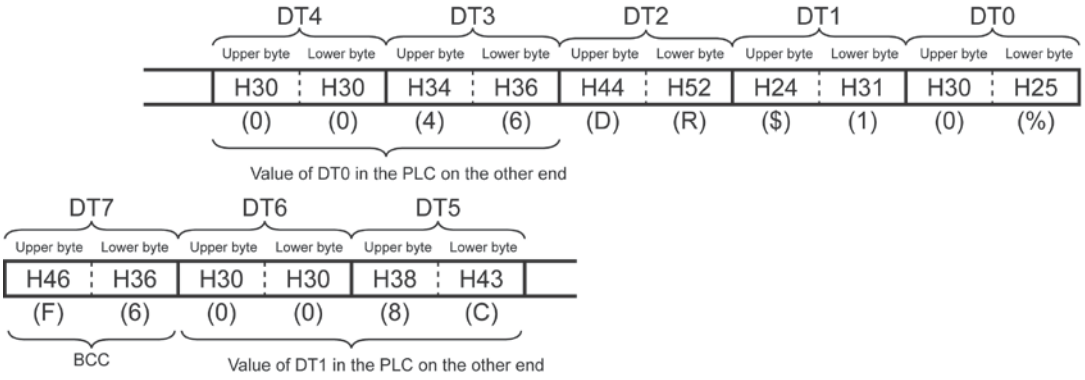

Extracting the data register values from the PLC on the other end

In the program, the data segment of the response from the PLC on the other end is converted to hexadecimal data using the F72 (AHEX) (hexadecimal ASCII → hexadecimal data conversion) instruction and stored in DT50 and DT51, only if the character string "$1" stored in DT1 is detected as a comparison instruction

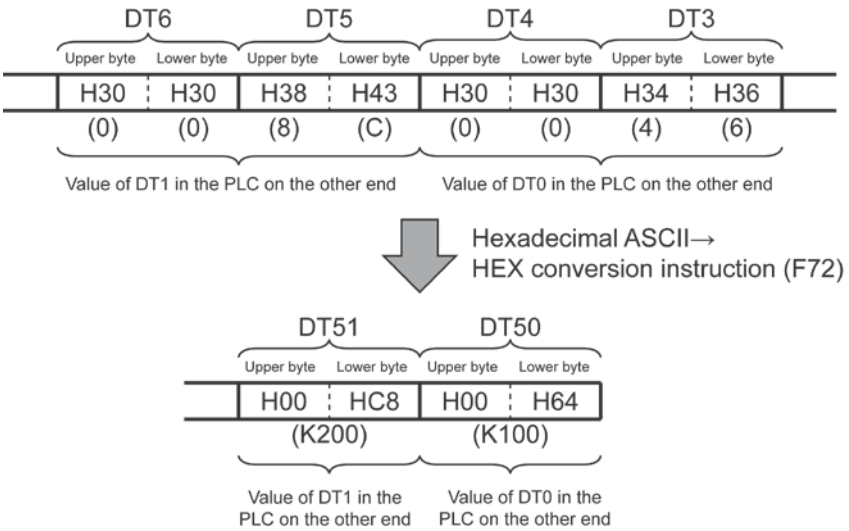

If an error occurs, "%01!○○□□C_R" is returned as the response (○○ is the error code and □□ is the BCC).

Note: The MEWTOCOL master function of computer link is recommended as it is easy to communicate.

Ramco National www.PanasonicSensors.com 1-800-280-6933

The values of DT50 and DT51 are written in DT0 and 1 of PLC.

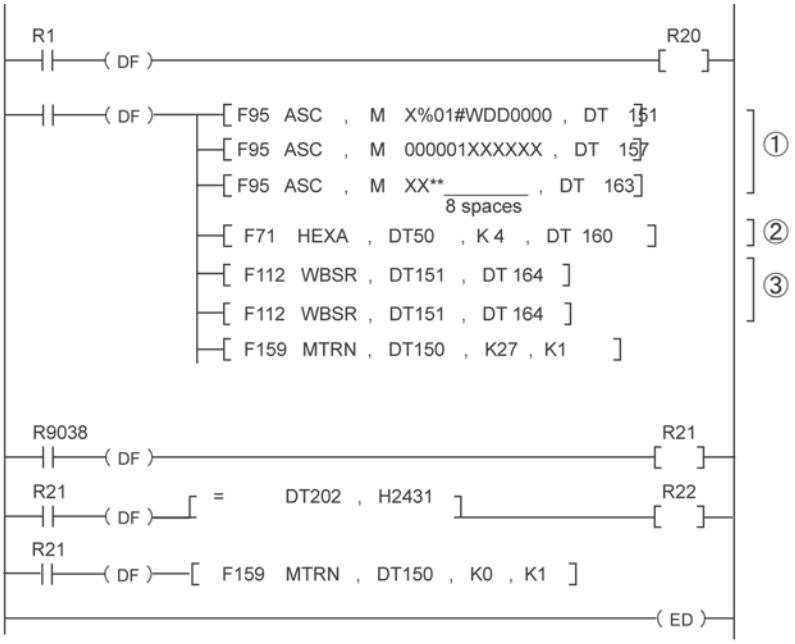

① Shifted for 1 byte to execute the HEX→ASCII conversion instruction (F71) easily.

DT151	%	X
DT152	1	0
DT153	W	#
DT154	D	D
DT155	0	0
DT156	0	0
DT157	0	0
DT158	0	0
DT159	1	0
DT160	X	X
DT161	X	X
DT162	X	X
DT163	X	X
DT164	*	*

② ASCII code is inserted for the value of DT50

ASCII code is inserted for the value of DT51

③ F112 instruction Shift to right for 2 digits

DT151	0	%
DT152	#	1
DT153	D	W
DT154	0	D
DT155	0	0
DT156	0	0
DT157	0	0
DT158	0	0
DT159	6	1
DT160	0	4
DT161	C	0
DT162	0	8
DT163	*	0
DT164		*

When K100(H0064) is in DT50 and K200 (H00C8) is in DT51

Normal response %01$WD□□$^{C}_{R}$
BCC

Abnormal response %01 ! ○○□□$^{C}_{R}$
BCC
Error code

Ramco National www.PanasonicSensors.com 1-800-280-6933

7.4.4 1:N Communication (General-purpose Serial Communication)

Overview

The FP-X and the external units are connected using an RS485 cable. Using the protocol that matches the external units, the F159 (MTRN) instruction is used to send and receive data.

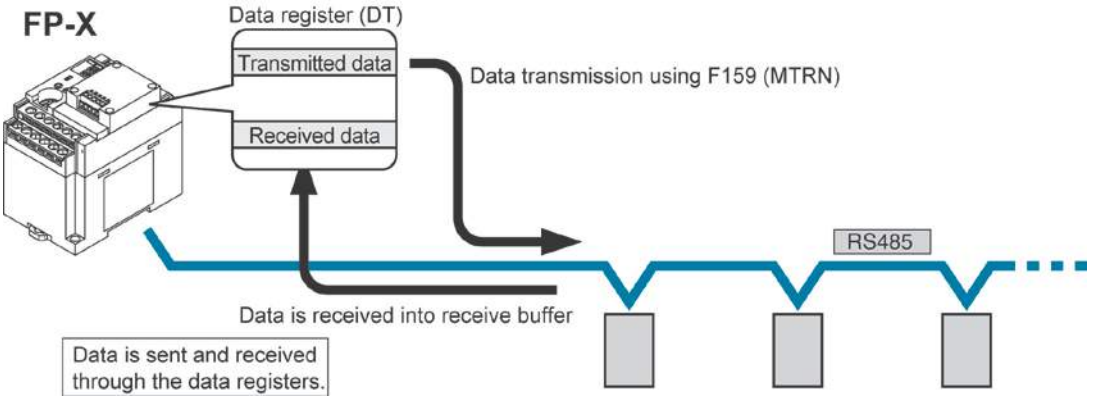

Reference: <7.2.1 Precaution When Using RS485 Port>

System register settings

• In the default settings, the COM1 port is set to computer link mode.

Settings for COM1 port

No.	Name	Set Value
No. 412	Selection of communication mode COM1 port	General-purpose serial communication
No. 413	Communication format for COM1port	Data length: …… 7 bits/8 bits Parity check: ….. None/Odd/Even Stop bit: ……. 1 bit/2 bits Terminator: …….. CR/CR+LF/None/ETX Header: ……. No STX/STX
No. 415	Baud rate setting for COM1port Note3)	2400 to 115200 bps
No. 416	Starting address for receive buffer for COM1port	DT0 to DT32764 (Initial value: DT0)
No. 417	Receive buffer capacity for COM1port	0 to 2048 words (Initial value: 2048 words)

Note1) The communication format and baud rate should be set to match the connected devices.

Note2) The terminal units of AFPX-COM3, AFPX-COM4 and AFPX-COM6 are specified by the dip switch located in the communication cassette.

Note3) The baud rates of 300, 600 and 1200 bps can be specified by the SYS1 instruction. However, the setting value of the system register cannot be changed.

Ramco National www.PanasonicSensors.com 1-800-280-6933

7.5 Communication Function 3: PC(PLC) Link

7.5.1 PC(PLC) Link

Overview

- The PLC link is an economic way of linking PLCs of the FP-X, FPΣ and FP2-MCU, using a twisted-pair cable.
- Data is shared between the PLCs using link relays (L) and link registers (LD).
- The statuses of the link relays and link registers of one PLC are automatically fed back to the other PLCs on the same network.
- PC(PLC) link is not the default setting. Therefore, the setting of system register “COM1 Port setting” communication mode no. 412 must be changed to “PC Link” in order to use this function.
- Unit numbers and link areas are allocated using the system registers.
- It is available with the COM1 port only.

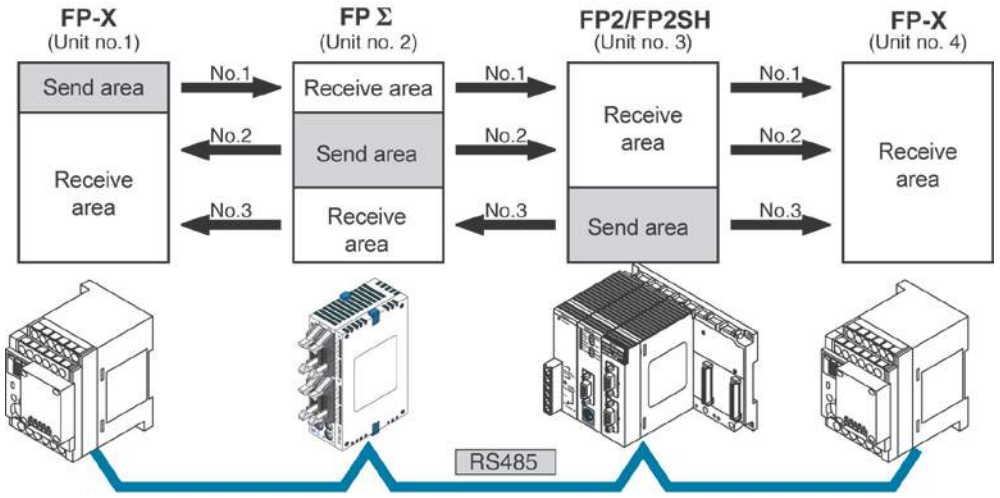

The link relays and link registers of the PLCs contain areas for sending and areas for receiving data. These areas are used to share data among the PLCs.

Ramco National www.PanasonicSensors.com 1-800-280-6933

Operation of PLC link

- Turning on a link relay contact in one PLC turns on the same link relay in all other PLCs on the same network.
- Likewise, if the contents of a link register in one PLC are changed, the values of the same link register are changed in all PLCs on the same network.

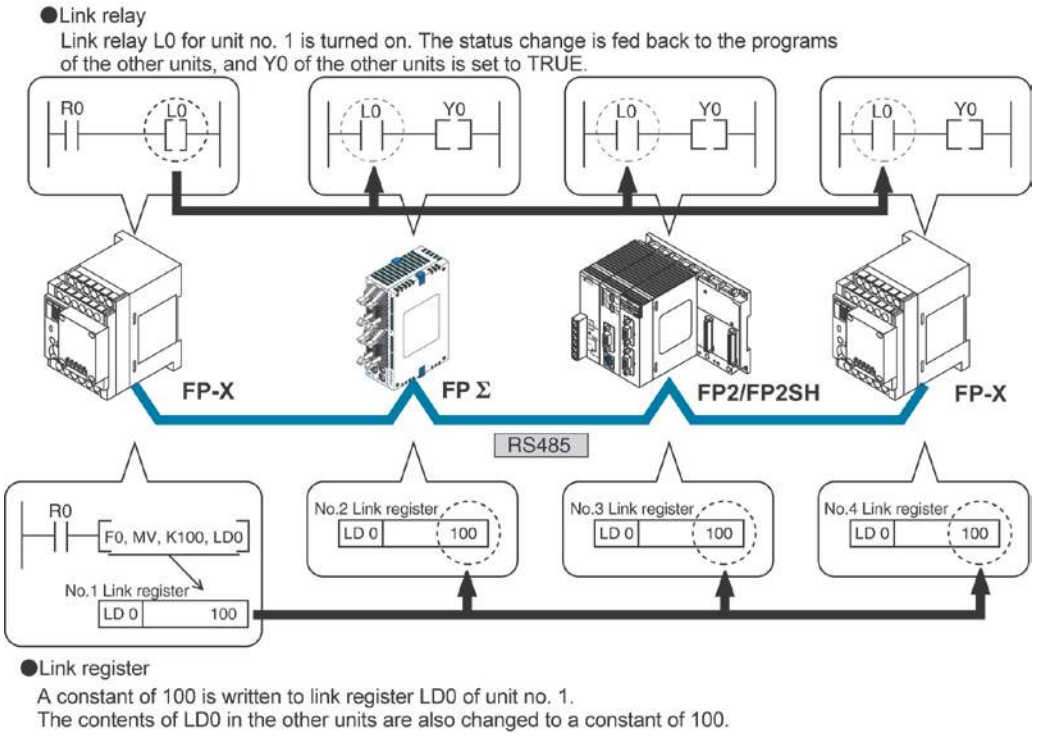

Ramco National www.PanasonicSensors.com 1-800-280-6933

7.5.2 Setting Communication Parameters

Setting of communication mode

In the default settings, the COM1 port is set to computer link mode.

Set the communication mode using the FPWIN GR programming tool. Select “PLC Configuration” under “Options”, and then click “COM1 port” tab. (The PC(PLC) link is available for COM1 port only.)

Dialog box of PLC system register setting

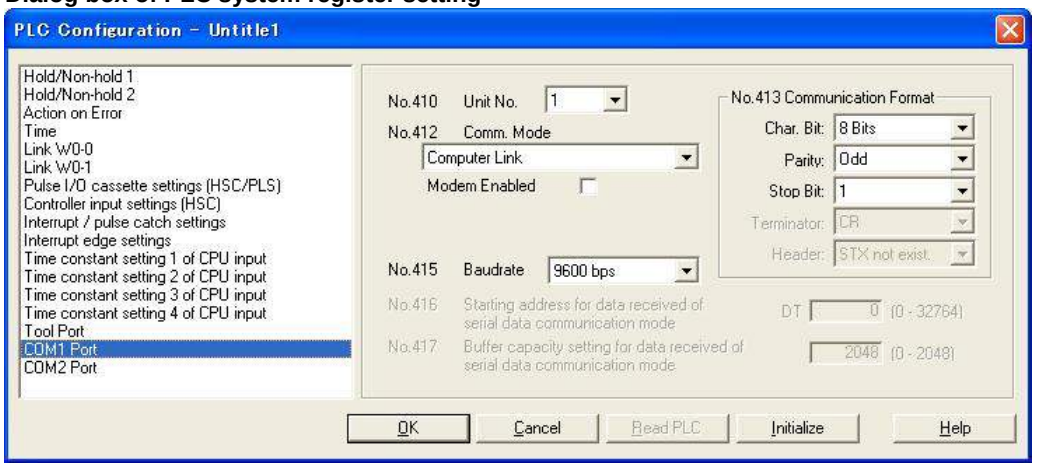

No. 412 Communication Mode

Select the COM1 port operation mode:

Click on ▼, and select “PC Link”.

Key Point:

- When using a PC(PLC) link, the communication format and baud rate are fixed:

No.	Name	Set Value
No. 413	Communication format for COM 1port	Data length: …… 8 bits Parity check: ….. Odd Stop bit: …… 1 bit Terminator: …….. CR Header: …… STX not exist
No. 415	Baud rate setting for COM1 port	115200 bps

Note1) The terminal units of AFPX-COM3 and AFPX-COM4 are specified by the dip switch located in the communication cassette.

Ramco National www.PanasonicSensors.com 1-800-280-6933

Setting of unit numbers

By default, the unit number for the communication port is set to 1 in the system registers.
In a PC(PLC) link that connects multiple PLCs on the same transmission line, the unit number must be set in order to identify the different PLCs.

The unit number is specified either by using **the SYS1 instruction** or **the system register**.

Note1) The priority order for unit number settings is as follows:
1. SYS1 instruction
2. System registers

Note2) Unit numbers should be set sequentially and consecutively, starting from 1, with no breaks between them. If there is a missing unit number, the transmission time will be longer.

Note3) If fewer than 16 units are linked, the transmission time can be shortened by setting the largest unit number in system register no. 47.

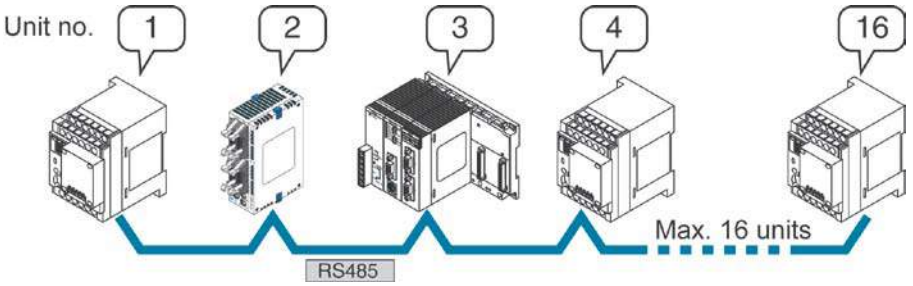

Unit numbers are the numbers to identify the different PLCs on the same network. The same number must not be used for more than one PLC on the same network.

Note:

When using the PC(PLC) link with the RS232C/RS422, the number of units is 2.

Ramco National www.PanasonicSensors.com 1-800-280-6933

Setting with the system register

Set the unit numbers using the FPWIN GR programming tool. Select “PLC Configuration” under “Options”, and then select “COM1 port” tab.

Dialog box of PLC system register setting

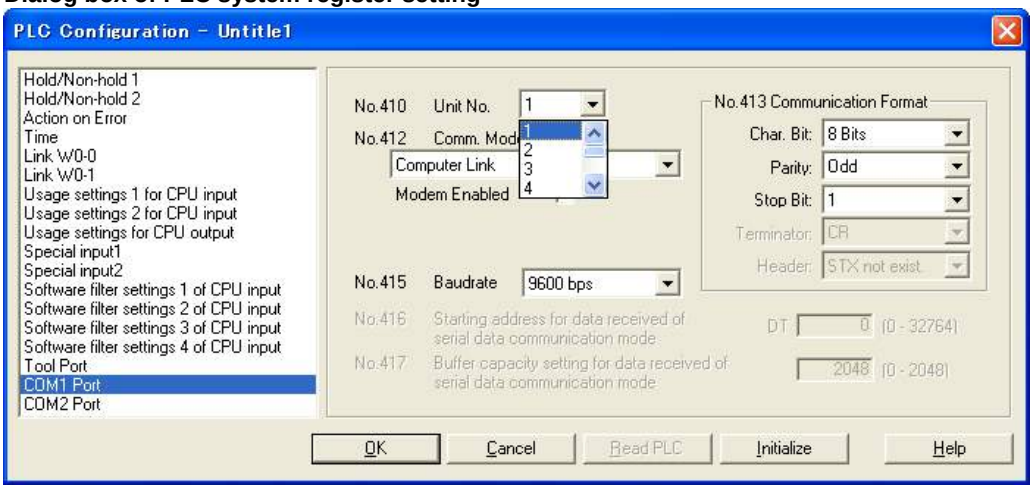

No. 410 (for COM1 port) Unit number setting

Select the COM port operation mode:

Click on ▼, and select unit number between 1 and 16.

Note1) Unit numbers should be set sequentially and consecutively, starting from 1, with no breaks between them. If there is a missing unit number, the transmission time will be longer.

Note2) If fewer than 16 units are linked, the transmission time can be shortened by setting the largest unit number in system register no. 47.

Setting with SYS instruction

Reference: <FP series Programming Manual ARCT1F353>.

Ramco National www.PanasonicSensors.com 1-800-280-6933

Link area allocation

- The link relays and link registers to be used in the PC(PLC) link are allocated in the link area of the CPU unit. Link area allocations are specified by setting the system registers of the CPU unit.

System registers

No.		Name	Default value	Set value
For PC (PLC) link 0	40	Range of link relays used for PC(PLC) link	0	0 to 64 words
	41	Range of link data registers used for PC(PLC) link	0	0 to 128 words
	42	Starting number for link relay transmission	0	0 to 63
	43	Link relay transmission size	0	0 to 64 words
	44	Starting number for link data register transmission	0	0 to 127
	45	Link data register transmission size	0	0 to 128 words
	46	PC(PLC) link switch flag	Normal	Normal: 1st half Reverse: 2nd half
	47	Maximum unit number setting for MEWNET-W0 PC(PLC) link	16	1 to 16 Note)
For PC (PLC) link 1	46	PC(PLC) link switch flag	Normal	Normal: 1st half Reverse: 2nd half
	50	Range of link relays used for PC(PLC) link	0	0 to 64 words
	51	Range of link data registers used for PC(PLC) link	0	0 to 128 words
	52	Starting number for link relay transmission	64	64 to 127
	53	Link relay transmission size	0	0 to 64 words
	54	Starting number for link data register transmission	128	128 to 255
	55	Link data register transmission size	0	0 to 128 words
	57	Maximum unit number setting for MEWNET-W0 PC(PLC) link	16	1 to 16 Note)

Note) The same maximum unit number should be specified for all the PLCs connected in the PC(PLC) link.

Link area configuration

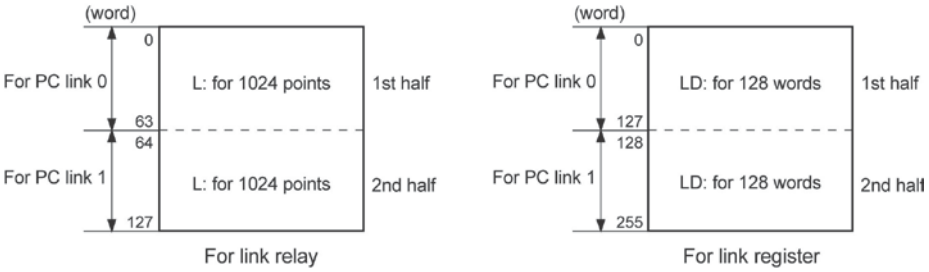

- Link areas consist of link relays and link registers, and are divided into areas for PC(PLC) link 0 and PC(PLC) link 1 and used with those units.
- The link relay which can be used in an area for either PC(PLC) link 0 or PC(PLC) link 1 is maximum 1024 points (64 words), and the link register is maximum 128 words.

Note:

The PC link 1 can be used to connect with the second PC link W0 of the FP2 Multi Communication Unit (MCU). At that time, the link relay number and link register number for the PC link can be the same values as the FP2 (from WL64, from LD128).

Reference:

For the information on FP2-MCU, <Chapter 5 Communication Function PC(PLC) Link in FP2 Multi Communication Unit Technical Manual ARCT1F396E>.

Ramco National www.PanasonicSensors.com 1-800-280-6933

Example of allocation

The areas for PC(PLC) link are divided into send areas and receive areas. The link relays and link registers are sent from the send area to the receive area of a different PLC. Link relays and link registers with the same numbers as those on the transmission side must exist in the receive area on the receiving side.

For PC(PLC) link 0

Link relay allocation

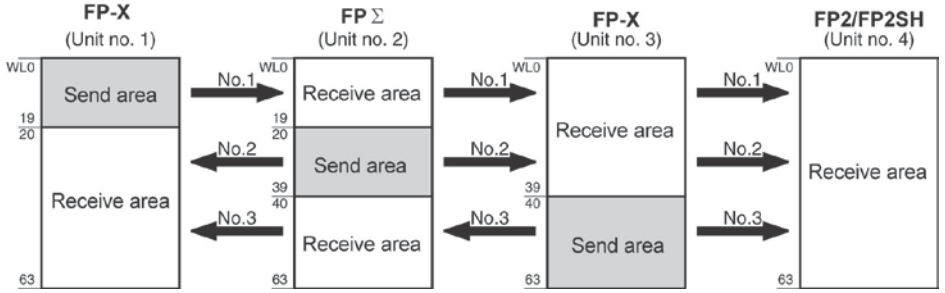

System registers

No.	Name	Setting for various units			
		No. 1	No. 2	No. 3	No. 4
40	Range of link relays used	64	64	64	64
42	Starting No. of word for link relay transmission	0	20	40	0
43	Link relay transmission size	20	20	24	0

Note) No. 40 (range of link relays used) must be set to the same range for all the units.

Link register allocation

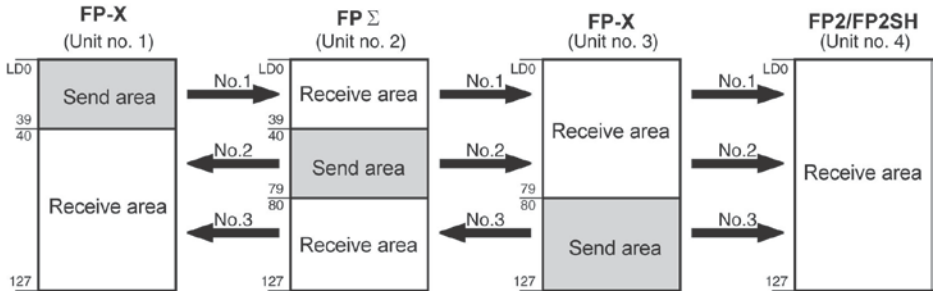

System registers

No.	Name	Setting for various units			
		No. 1	No. 2	No. 3	No. 4
41	Range of link registers used	128	128	128	128
44	Starting No. for link register transmission	0	40	80	0
45	Link register transmission size	40	40	48	0

Note) No. 41 (range of link registers used) must be set to the same range for all the units.

When link areas are allocated as shown above, the No. 1 send area can be sent to the No. 2, No. 3 and No. 4 receive areas. Also, the No. 1 receive area can receive data from the No. 2 and No. 3 send areas. No. 4 is allocated as a receive area only, and can receive data from No. 1, No. 2 and No. 3, but cannot transmit it to other stations.

Ramco National www.PanasonicSensors.com 1-800-280-6933

For PC(PLC) link 1

Link relay allocation

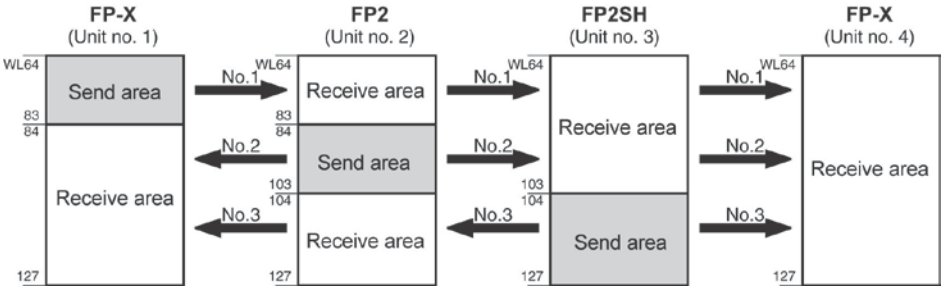

System registers

No.	Name	Setting for various units			
		No. 1	No. 2	No. 3	No. 4
50	Range of link relays used	64	64	64	64
52	Starting No. of word for link relay transmission	64	84	104	64
53	Link relay transmission size	20	20	24	0

Note) No. 50 (range of link relays used) must be set to the same range for all the units.

Link register allocation

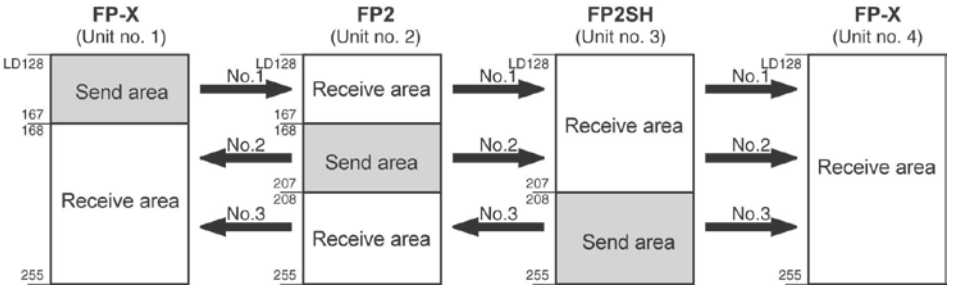

System registers

No.	Name	Setting for various units			
		No. 1	No. 2	No. 3	No. 4
51	Range of link registers used	128	128	128	128
54	Starting No. for link register transmission	128	128	208	128
55	Link register transmission size	40	40	48	0

Note) No. 51 (range of link registers used) must be set to the same range for all the units.

When link areas are allocated as shown above, the No. 1 send area can be sent to the No. 2, No. 3 and No. 4 receive areas. Also, the No. 1 receive area can receive data from the No. 2 and No. 3 send areas. No. 4 is allocated as a receive area only, and can receive data from No. 1, No. 2 and No. 3, but cannot transmit it to other stations.

Note:

The PC link 1 can be used to connect with the second PC link W0 of the FP2 Multi Communication Unit (MCU). At that time, the link relay number and link register number for the PC link can be the same values as the FP2 (from WL64, from LD128).

Reference:

For the information on FP2-MCU, <Chapter 5 Communication Function PC(PLC) Link in FP2 Multi Communication Unit Technical Manual ARCT1F396E>.

Ramco National www.PanasonicSensors.com 1-800-280-6933

Partial use of link areas

In the link areas available for PC(PLC) link, link relays with a total of 1024 points (64 words) and link registers with a total of 128 words can be used. This does not mean, however, that it is necessary to reserve the entire area. Parts of the area which have not been reserved can be used as internal relays and internal registers.

Link relay allocation

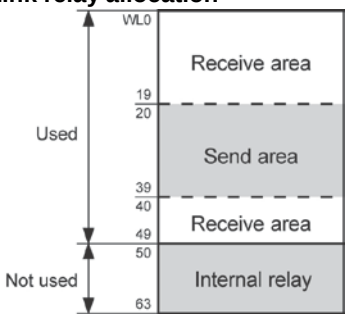

No.	Name	No.
No. 40	Range of link relays used	50
No. 42	Starting No. of word for link relay transmission	20
No. 43	Link relay transmission size	20

With the above settings, the 14 words (224 points) consisting of WL50 to WL63 can be used as internal relays.

Link register allocation

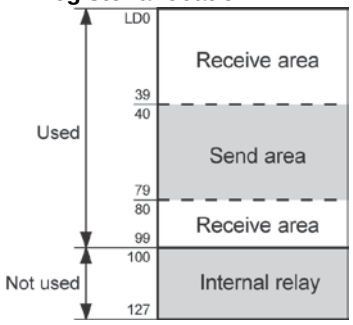

No.	Name	No.
No. 41	Range of link registers used	100
No. 44	Starting No. for link register transmission	40
No. 45	Link register transmission size	40

With the above settings, the 28 words consisting of LD100 to LD127 can be used as internal registers.

Ramco National www.PanasonicSensors.com 1-800-280-6933

Note: Precautions When Allocating Link Areas

If a mistake is made when allocating a link area, be aware that an error will result, and communication will be disabled.

Avoid overlapping send areas

When sending data from a send area to the receive area of another PLC, there must be a link relay and link register with the same number in the receive area on the receiving side. In the example shown below, there is an area between No. 2 and No. 3 which is overlapped, and this will cause an error, so that communication cannot be carried out.

Example of link relay allocations

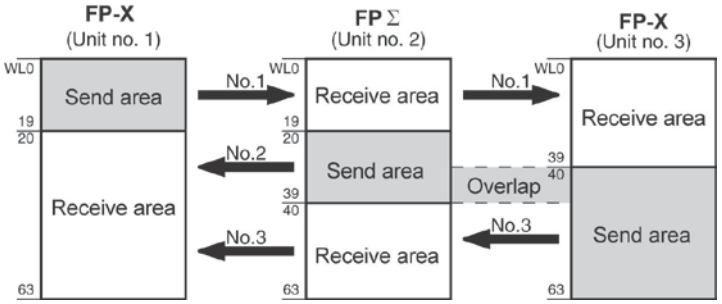

System registers

No.	Name	Set value of various control units		
		No. 1	No. 2	No. 3
No. 40	Range of link relays used	64	64	64
No. 42	Starting No. of word for link relay transmission	0	20	30
No. 43	Link relay transmission size	20	20	34

Invalid allocations

The allocations shown below are not possible, neither for link relays nor for link registers:

- Send area is split

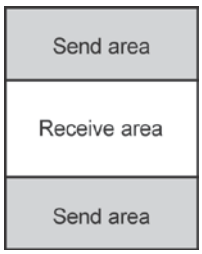

- Send and receive areas are split into multiple segments

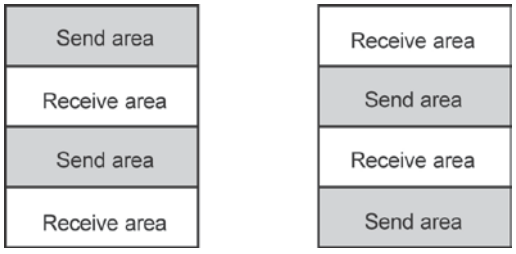

Ramco National www.PanasonicSensors.com 1-800-280-6933

Setting the largest unit number for a PC(PLC) link

The largest unit number can be set using system register no. 47 (using system register no. 57 for PC(PLC) link 1).

[Sample setting]

No. of units linked	Setting contents
2	1st unit: Unit no. 1 is set 2nd unit: Unit no. 2 is set A largest unit no. of 2 is set for each.
4	1st unit: Unit no. 1 is set 2nd unit: Unit no. 2 is set 3rd unit: Unit no. 3 is set 4th unit: Unit no. 4 is set A largest unit no. of 4 is set for each.
n	Nth unit: Unit no. n is set A largest unit no. of n is set for each.

Note:

- Unit numbers should be set sequentially and consecutively, starting from 1, with no breaks between them. If there is a missing unit number, the transmission time will be longer.
- If fewer than 16 units are linked, the transmission time can be shortened by setting the largest unit number in system register no. 47 (in system register no. 57 for PC(PLC) link 1).
- For all PLCs which are linked, the same value should be set for the largest unit number.
- If there are fewer than 16 units linked and the largest unit number has not been set (default=16), or the largest unit number has been set but the unit number settings are not consecutive, or the unit number settings are consecutive but there is a unit for which the power supply has not been turned on, the response time for the PC(PLC) link (the link transmission cycle) will be longer.

Reference: <7.5.5 PC(PLC) Link Response Time>.

Setting PC(PLC) link switching flag

PC(PLC) link switching flag can be set using system register no. 46.

If it is set to 0 (default value), the first half of the link relays and registers are used. If it is set to 1, the second half of the link relays and registers are used.

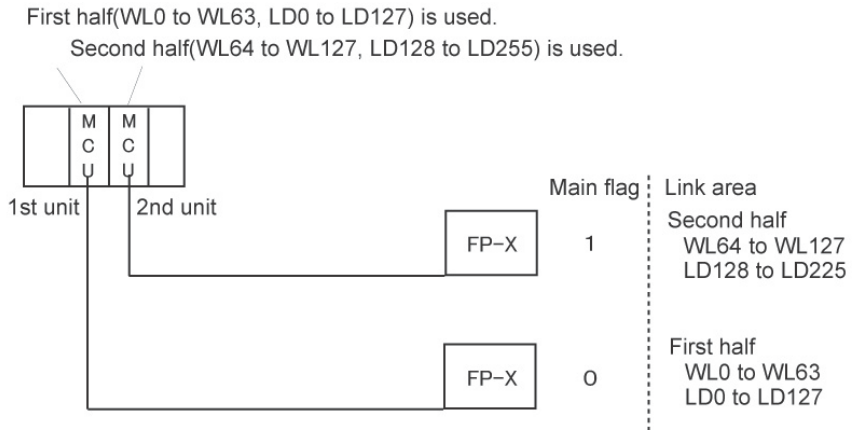

Ramco National www.PanasonicSensors.com 1-800-280-6933

7.5.3 Monitoring

When using a PC(PLC) link, the operation status of the links can be monitored using the following relays.

Transmission assurance relays
For PC(PLC) link 0: R9060 to R906F (correspond to unit no. 1 to 16)
For PC(PLC) link 1: R9080 to R908F (correspond to unit no. 1 to 16)
If the transmission data from a different unit is being used with the various PLCs, check to make sure the transmission assurance relay for the target unit is on before using the data.

Relay no.	R9060	R9061	R9062	R9063	R9064	R9065	R9066	R9067	R9068	R9069	R906A	R906B	R906C	R906D	R906E	R906F
Unit no.	1	2	3	4	5	6	7	8	9	10	11	12	13	14	15	16
Conditions for on/off	ON: When the PLC link is normal OFF: If transmission is stopped, a problem has occurred, or a PLC link is not used															

Operation mode relays
For PC(PLC) link 0: R9070 to R907F (correspond to unit no. 1 to 16)
For PC(PLC) link 1: R9090 to R909F (correspond to unit no. 1 to 16)
The operation modes (RUN/PROG.) can be checked for any given PLC.

Relay no.	R9070	R9071	R9072	R9073	R9074	R9075	R9076	R9077	R9078	R9079	R907A	R907B	R907C	R907D	R907E	R907F
Unit no.	1	2	3	4	5	6	7	8	9	10	11	12	13	14	15	16
Conditions for on/off	ON: When the unit is in the RUN mode ON: When the unit is in the PROG. mode															

PLC link transmission error relay R9050
This relay goes on if a problem is detected during transmission.

Relay no.	R9050															
Unit no.	1	2	3	4	5	6	7	8	9	10	11	12	13	14	15	16
Conditions for on/off	ON: When a transmission error has occurred in the PLC link, or when there is an error in the setting for the PLC link area OFF: When the unit is in the PROG. mode															

Key Point: Monitoring the PC(PLC) link status
In FPWIN GR, the PC(PLC) link status items, such as the transmission cycle time and the number of times that errors have occurred, can be monitored by selecting the PC(PLC) link switch on the FPWIN GR Status Monitor screen.

Note:
Remote programming of the linked PLCs is not possible.

Ramco National www.PanasonicSensors.com 1-800-280-6933

7.5.4 Connection Example of PC(PLC) Link

When using three PLCs

In the example shown here, link relays are use. When X1 of PLC with unit no. 1 turns on, Y0 of PLC with unit no. 2 turns on. When X2 of PLC with unit no. 1 turns on, Y0 of PLC with unit no. 3 turns on.

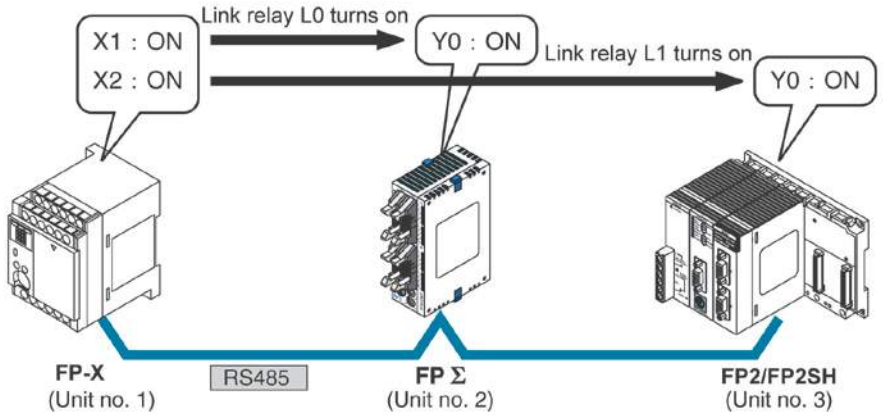

System register settings

When using a PC(PLC) link, the communication format and baud rate are fixed.

No.	Name	Set Value
No. 413	Communication format for COM1 port	Data length: …… 8 bits Parity check: ….. Odd Stop bit: …… 1 bit Terminator: …….. CR Header: …… STX not exist
No. 415	Baud rate setting for COM1 port	115200 bps

Unit no. and communication mode settings

- Setting for the FP-X with unit no. 1

No.	Name	Set value
No. 410	Unit no. for COM1 port	1
No. 412	Selection of communication mode for COM1 port	PC link

- Setting for the FPΣ with unit no. 2

No.	Name	Set value
No. 410	Unit no. for COM1 port	2
No. 412	Selection of communication mode for COM1 port	PC link

- Setting for the FP2-MCU with unit no. 3

Name	Set value
Unit no. for COM1 port	3 (Set using the unit no. setting switch)
Selection of communication mode for COM1 port	PC(PLC) link (Set using the mode speed setting switch)

Key Point:

Make sure the same unit number is not used for more than one of the PLCs connected through the PC(PLC) link function, and specify consecutive numbers.

Ramco National www.PanasonicSensors.com 1-800-280-6933

Link area allocation

- Link relay allocation

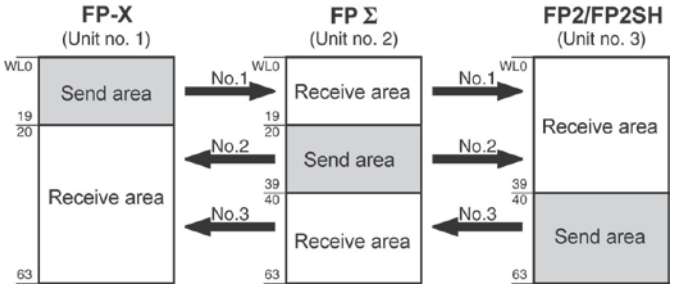

System registers

No.	Name	Set value of various control units		
		No. 1	No. 2	No. 3
No. 40	Range of link relays used	64	64	64
No. 42	Starting No. of word for link relay transmission	0	20	40
No. 43	Link relay transmission size	20	20	24

- Link register allocation

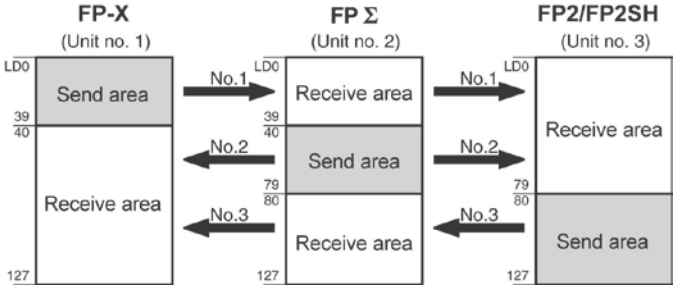

System registers

No.	Name	Set value of various control units		
		No. 1	No. 2	No. 3
No. 41	Range of link registers used	128	128	128
No. 44	Starting No. for link register transmission	0	40	80
No. 45	Link register transmission size	40	40	48

Setting the largest unit number

No.	Name	Set value
No. 47	Largest unit number setting for PC(PLC) link	3

Setting terminal unit

The terminal unit is specified with the dip switch located in the communication cassette.

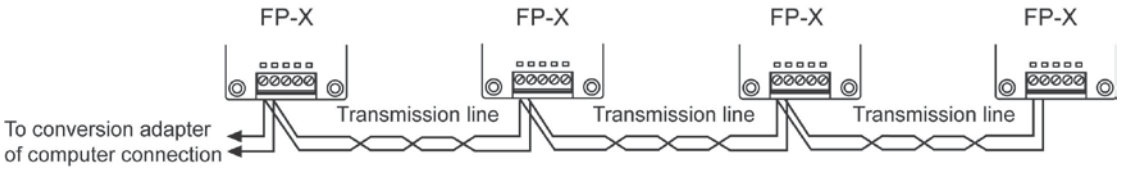

Reference: <7.1.3 Type of Communication Cassettes AFPX-COM3/COM4/COM6>.

Ramco National www.PanasonicSensors.com 1-800-280-6933

Sample program

- Unit no. 1

When X1 is input, L0 of the link relay goes on, and when X2 is input, L1 of the link relay goes on.

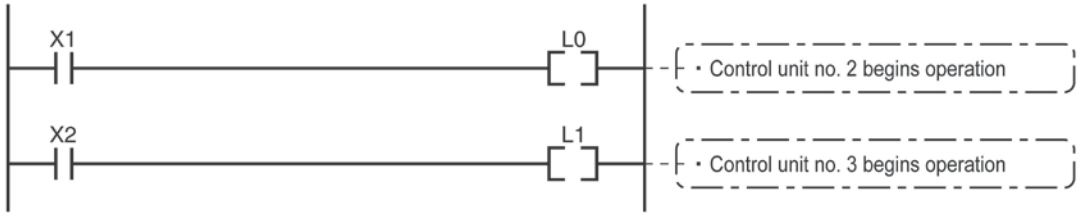

- Unit no. 2

When L0 of the link relay goes on, Y0 is output.

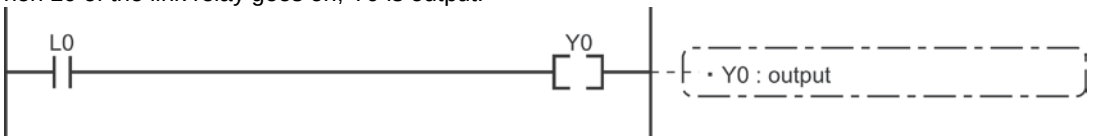

- Unit no. 3

When L1 of the link relay goes on, Y0 is output.

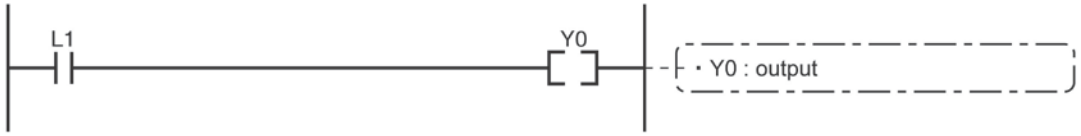

Ramco National www.PanasonicSensors.com 1-800-280-6933

7.5.5 PC(PLC) Link Response Time

The maximum value for the transmission time (T) of one cycle can be calculated using the following formula.

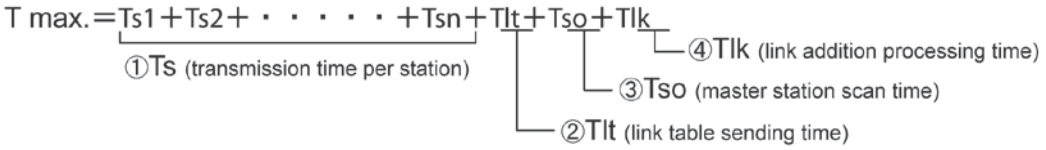

The various items in the formula are calculated as described below.

 Ts (transmission time per station)
Ts = scan time + Tpc (PC(PLC) link sending time)

Tpc = Ttx (sending time per byte) x Pcm (PLC link sending size)
Ttx = 1/(baud rate x 1000) x 11 ms …. Approx. 0.096 ms at 115.2 kbps
Pcm = 23 + (number of relay words + number of register words) x 4

 Tlt (link table sending time)
Tlt = Ttx (sending time per byte) x Ltm (link table sending size)

Ttx = 1/(baud rate x 1000) x 11 ms …. Approx. 0.096 ms at 115.2 kbps
Ltm = 13 + 2 x n (n = number of stations being added)

 Tso (master station scan time)
This should be confirmed using the programming tool.

 Tlk (link addition processing time) …. If no stations are being added, Tlk = 0.
Tlk = Tlc (link addition command sending time) + Twt (addition waiting time) + Tls (sending time for command to stop transmission if link error occurs) + Tso (master station scan time)

Tlc = 10 x Ttx (sending time per byte)
Ttx = 1/(baud rate x 1000) x 11 ms …. Approx. 0.096 ms at 115.2 kbps
Twt = Initial value 400 ms (can be changed using SYS1 system register instruction)
Tls = 7 x Ttx (sending time per byte)
Ttx = 1/(baud rate x 1000) x 11 ms …. Approx. 0.096 ms at 115. 2 kbps
Tso = Master station scan time

Calculation example 1
When all stations have been added to a 16-unit link, the largest station number is 16, relays and registers have been evenly allocated, and the scan time for each PLCs is 1 ms.
Ttx = 0.096 Each Pcm = 23 + (4 + 8) x 4 = 71 bytes Tpc = Ttx x Pcm = 0.096 x 71 ≒ 6.82 ms
Each Ts = 1 + 6.82 = 7.82 ms Tlt = 0.096 x (13 + 2 x 16) = 4.32 ms
Given the above conditions, the maximum value for the transmission time (T) of one cycle will be:
T max. = 7.82 x 16 + 4.32 + 1 = 130.44 ms

Calculation example 2
When all stations have been added to a 16-unit link, the largest station number is 16, relays and registers have been evenly allocated, and the scan time for each PLC is 5 ms
Ttx = 0.096 Each Pcm = 23 + (4 + 8) x 4 = 71 bytes Tpc = Ttx x Pcm = 0.096 x 71 ≒ 6.82 ms
Each Ts = 5 + 6.82 = 11.82 ms Tlt = 0.096 x (13 + 2 x 16) = 4.32 ms
Given the above conditions, the maximum value for the transmission time (T) of one cycle will be:
T max. = 11.82 x 16 + 4.32 + 5 = 198.44 ms

Ramco National www.PanasonicSensors.com 1-800-280-6933

Calculation example 3
When all but one station have been added to a 16-unit link, the largest station number is 16, relays and registers have been allocated evenly, and the scan time for each PLC is 5 ms.
Ttx = 0.096 Each Ts = 5 + 6.82 = 11.82 ms
Tlt = 0.096 x (13 + 2 x 15) ≒ 4.13 ms
Tlk = 0.96 + 400 + 0.67 + 5 ≒407 ms
Note: The default value for the addition waiting time is 400 ms.

Given the above conditions, the maximum value for the transmission time (T) of one cycle will be:
T max. = 11.82 x 15 + 4.13 + 5 + 407 = 593.43 ms

Calculation example 4
When all stations have been added to an 8-unit link, the largest station number is 8, relays and register have been evenly allocated, and the scan time for each PLC is 5 ms.
Ttx = 0.096 Each Pcm = 23 + (8 + 16) x 4 = 119 bytes
Tpc = Ttx x Pcm = 0.096 x 119 ≒ 11.43 ms
Each Ts = 5 + 11.43 = 16.43 ms Tlt = 0.096 x (13 + 2 x 8) ≒ 2.79 ms

Given the above conditions, the maximum value for the transmission time (T) of one cycle will be:
T max. = 16.43 x 8 + 2.79 + 5 = 139.23 ms

Calculation example 5
When all stations have been added to a 2-unit link, the largest station number is 2, relays and registers have been evenly allocated, and the scan time for each PLC is 5 ms.
Ttx = 0.096 Each Pcm = 23 + (32 + 64) x 4 = 407 bytes
Tpc = Ttx x Pcm = 0.096 x 407 ≒ 39.072 ms
Each Ts = 5 + 39.072 = 44.072 ms Tlt = 0.096 x (13 + 2 x 2) ≒ 1.632 ms

Given the above conditions, the maximum value for the transmission time (T) of one cycle will be:
T max. = 44.072 x 2 + 1.632 + 5 = 94.776 ms

Calculation example 6
When all stations have been added to a 2-unit link, the largest station number is 2, 32 relays and 2 register words have been evenly allocated, and the scan time for each PLC is 1 ms.
Ttx = 0.096 Each Pcm = 23 + (1 + 1) x 4 = 31 bytes
Tpc = Ttx x Pcm = 0.096 x 31 ≒ 2.976 ms
Each Ts = 1 + 2.976 = 3.976 ms Tlt = 0.096 x (13 + 2 x 2) ≒ 1.632 ms

Given the above conditions, the maximum value for the transmission time (T) of one cycle will be:
T max. = 3.976 x 2 + 1.632 + 1 = 10.584 ms

Note:
- In the description, “stations that have been added” refers to stations which are connected between station no. 1 and the largest station number and for which the power supply has been turned on.
- Comparing examples 2 and 3, the transmission cycle time is longer if there is one station that has not been added to the link. As a result the PC(PLC) link response time is longer.
- The SYS1 instruction can be used to minimize the transmission cycle time even if there are one or more stations that have not been added to the link.

Ramco National www.PanasonicSensors.com 1-800-280-6933

Reducing the transmission cycle time when there are stations that have not been added

If there are stations that have not been added to the link, the Tlk time (link addition processing time) and with this the transmission cycle time will be longer.

$$T\,max. = Ts1 + Ts2 + \cdots + Tsn + Tlt + Tso + Tlk$$

Tlk = Tlc (link addition command sending time) + Twt (addition waiting time) +
Tls (link error stop command sending time) + Tso (master station scan time)

With the SYS1 instruction, the link addition waiting time Twt in the above formula can be reduced. Thus, SYS1 can be used to minimize the increase in the transmission cycle time.

<Programming example of SYS1 instruction>

(SYS1, M PCLK1T0, 100)

Function:

Setting SYS1 to change the waiting time for a link to be added to the PC(PLC) link from the default value of 400 ms to 100 ms.

Keywords:

Setting for key word no. 1: PCLK1T0

Permissible range for key word no. 2: 10 to 400 (10 ms to 400 ms)

Note) Enter one space after M and then enter 12 characters to be aligned to the right.
If the second keyword is 2 digits, put 2 spaces, and if it is 3 digits, put one space.

Note:

If there are any units that have not been added to the link, the setting should not be changed as long as a longer link transmission cycle time does not cause any problem.

- The SYS1 instruction should be executed at the beginning of the program, at the rise of R9014. The same waiting time should be set for all linked PLCs.
- The waiting time should be set to a value of at least twice the maximum scan time for any of the PLCs connected to the link.
- If a short waiting time has been set, there may be PLCs that cannot be added to the link even if their power supply is on. (The shortest time that can be set is 10 ms.)

Ramco National www.PanasonicSensors.com 1-800-280-6933

Error detection time for transmission assurance relays

The power supply of any given PLC fails or is turned off, it takes (as a default value) 6.4 seconds for the transmission assurance relay of the PLC to be turned off at the other stations. This time period can be shortened using the SYS1 instruction.

<Programming example of SYS1 instruction>

(SYS1, M PCLK1T1, 100)

Function:

Setting SYS1 to change the time that the PC(PLC) link transmission assurance is off from the default value of 6400 ms to 100 ms.

Keywords:

Setting for key word no. 1: PCLK1T1

Permissible range for key word no. 2: 100 to 6400 (100 ms to 6400 ms)

Note) Enter one space after M and then enter 12 characters to be aligned to the right.
If the second keyword is 3 digits, put 2 spaces, and if it is 4 digits, no space is needed.

Note:

The setting should not be changed as long as a longer transmission assurance relay detection time does not cause any problems.

- The SYS1 instruction should be executed at the beginning of the program, at the rise of R9014. The same time should be set for all linked PLCs.
- The time should be set to a value of at least twice the maximum transmission cycle time when all of the PLCs are connected to the link.
- If short time has been set, the transmission assurance relay may not function properly. (The shortest time that can be set is 100 ms.)

Ramco National www.PanasonicSensors.com 1-800-280-6933

7.6 Communication Function 4: MODBUS RTU Communication

7.6.1 MODBUS RTU Communication

Function overview

- The MODBUS RTU protocol enables the communication between the FP-X and other devices (including our FP-e, Programmable display GT series and KT temperature control unit).
- Enables to have conversations if the master unit sends instructions (command messages) to slave units and the slave units respond (response messages) according to the instructions.
- Enables the communication between the devices of max. 99 units as the master function and slave function is equipped.
- The communication cassette can be used.

About MODBUS RTU

- The MODBUS RTU communication is a function for the master unit to read and write the data in slave units communicating between them.
- There are ASCII mode and RTU (binary) mode in the MODBUS protocol, however, the FP-X is supported with the RTU (binary) mode only.

Master function

Writing and reading data for various slaves is available using the F145 (SEND) and F146 (RECV) instructions.
Individual access to each slave and the global transmission is possible.

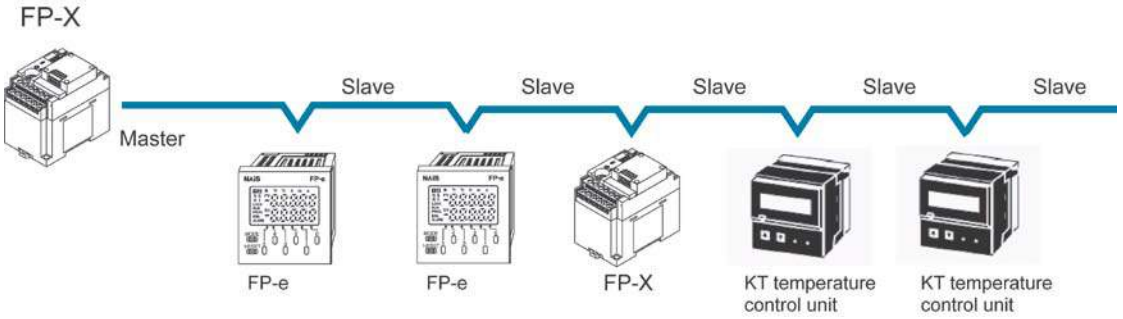

Slave function

If the slave units receive a command message from the master unit, they send back the response message corresponding to the content.
Do not execute the F145 (SEND) or F146 (RECV) instructions when the unit is used as a slave unit.

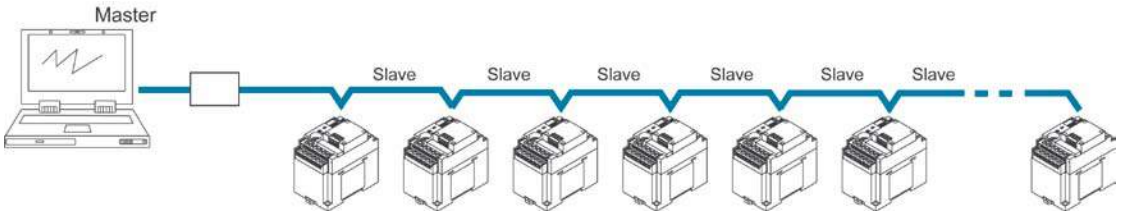

Ramco National www.PanasonicSensors.com 1-800-280-6933

MODBUS RTU command message frame

START	ADDRESS	FUNCTION	DATA	CRC CHECK	END
3.5-character time	8 bits	8 bits	n*8 bits	16 bits	3.5-character time

ADDRESS (Unit No.) 8 bits, 0 to 99 (decimal)
Note1) 0= Broadcast address
Note2) Slave unit No. is 1 to 99 (decimal)
Note3) For MODBUS, 0 to 247 (decimal)

FUNCTION 8 bits

DATA Varies depending on commands.

CRC 16 bits

END 3.5-character time (Differs depending on baud rate. Refer to reception judgement time.)

Response in normal status

The same message as a command is returned for single write command.
A part of a command message (6 bytes from the beginning) is returned for multiple write command.

Response in abnormal status

In case a parameter disabled to be processed is found in a command (except transmission error)

Slave address (unit number) Function code + 80H Error code CRC	One of either 1, 2 or 3

Error code contents

1: Function code error 2: Device number error (out of range) 3: Device quantity error (out of range)

Reception done judgment time

The process for receiving a message completes when the time that is exceeding the time mentioned below has passed after the final data was received.

Baud rate	Reception done judgment time
2400	Approx. 13.3 ms
4800	Approx. 6.7 ms
9600	Approx. 3.3 ms
19200	Approx. 1.7 ms
38400	Approx. 0.8 ms
57600	Approx. 0.6 ms
115200	Approx. 0.3 ms

Note) The reception done judgment time is an approx. 32-bit time.

Ramco National www.PanasonicSensors.com 1-800-280-6933

Supported commands

Executable instructions for master	Code (decimal)	Name (MODBUS original)	Name for FP-X	Remarks (Reference No.)
F146 (RECV)	01	Read Coil Status	Read Y and R Coils	0X
F146 (RECV)	02	Read Input Status	Read X Input	1X
F146 (RECV)	03	Read Holding Registers	Read DT	4X
F146 (RECV)	04	Read Input Registers	Read WL and LD	3X
F145 (SEND)	05	Force Single Coil	Write Single Y and R	0X
F145 (SEND)	06	Preset Single Register	Write DT 1 Word	4X
Cannot be issued	08	Diagnostics	Loopback Test	
F145 (SEND)	15	Force Multiple Coils	Write Multiple Ys and Rs	0X
F145 (SEND)	16	Preset Multiple Registers	Write DT Multiple Words	4X
Cannot be issued	22	Mask Write 4X Register	Write DT Mask	4X
Cannot be issued	23	Read/Write 4X Registers	Read/Write DT	4X

Table for MODBUS reference No. and FP-X device No.

MODBUS reference No.		Data on BUS (hexadecimal)	FP-X device No.
Coil	000001-001760	0000-06DF	Y0-Y109F
	002049-006144	0800-17FF	R0-R255F
Input	100001-101760	0000-06DF	X0-X109F
Holding register Note)	400001-432765	0000-7FFC	DT0-DT32764
Input register	300001-300128	0000-007F	WL0-WL127
	302001-302256	07D0-08CF	LD0-LD255

Note) For C14; MODBUS reference No. → 400001-411285, data on BUS (hexadecimal) → 0000-2FFC, FP-X device No. → DT0-DT12784.

Setting using FPWIN GR

1. Change the display to the “Online monitor” by selecting “Online Edit Mode” under “Online” in the menu bar or pressing [CTRL] and [F2] keys at the same time.
2. Select “Options” in the menu bar, and then select “PLC Configuration”. Click “COM Port”. There are separate tabs for setting the COM1 and COM2.

Ramco National www.PanasonicSensors.com 1-800-280-6933

Dialog box of MODBUS RTU setting

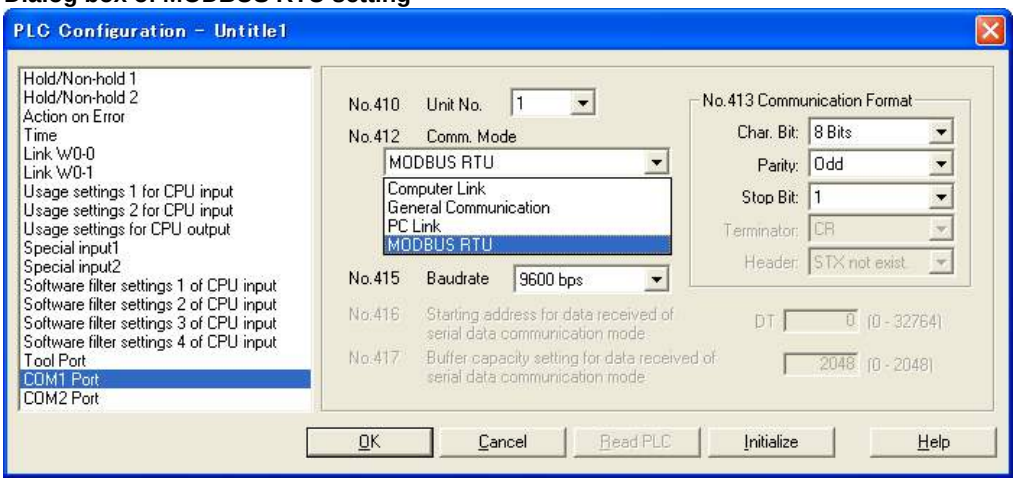

Reference: <MODBUS RTU Specifications>
It can be downloaded from our website.
http://industrial.panasonic.com/ac/e/dl_center/manual/

Ramco National www.PanasonicSensors.com 1-800-280-6933

7.6.2 MEWTOCOL Master (Sample Program)

Use the F145 (SEND) “Data send” or F146 (RECV) “Data receive” instruction to use the MEWTOCOL master function.

Note: Available for the transistor type and relay type Ver 1.21 or later version only.

Sample program

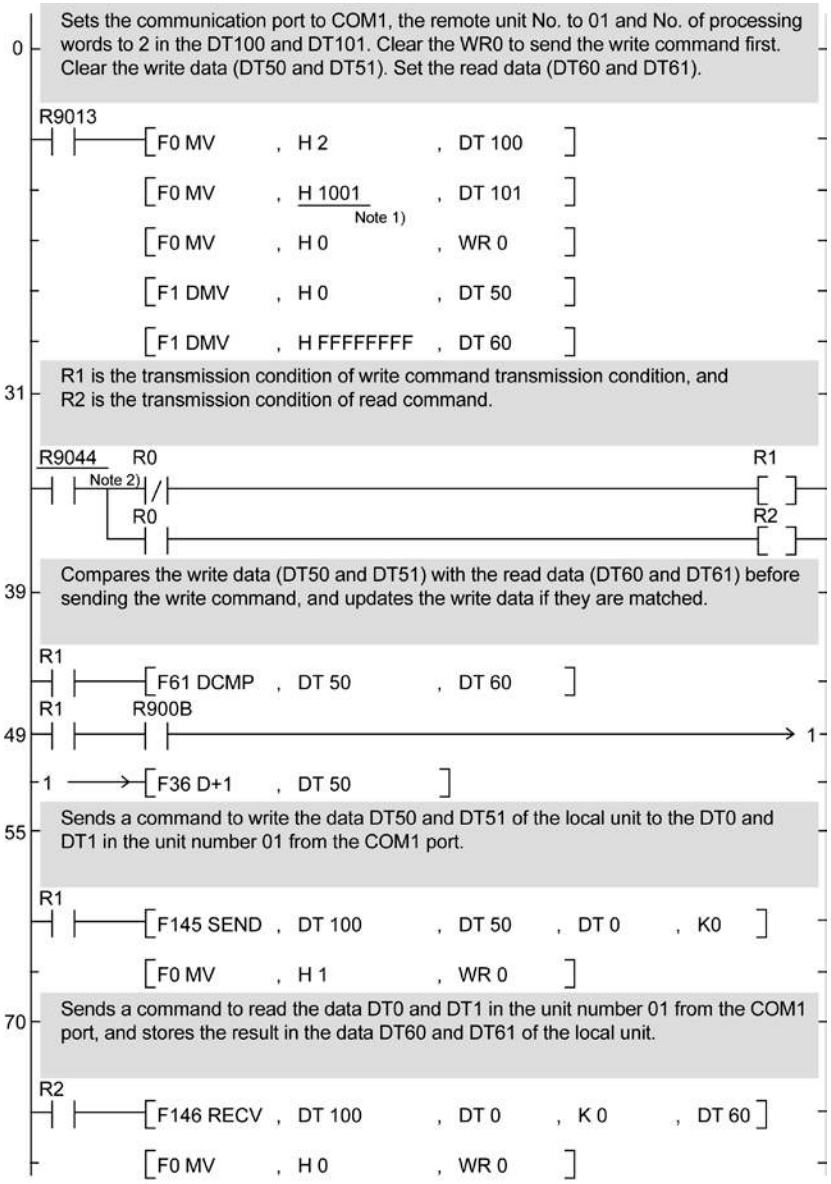

Note1) It is H2001 for COM2 port.
Note2) It is R904A for COM2 port.

Ramco National www.PanasonicSensors.com 1-800-280-6933

Flow chart

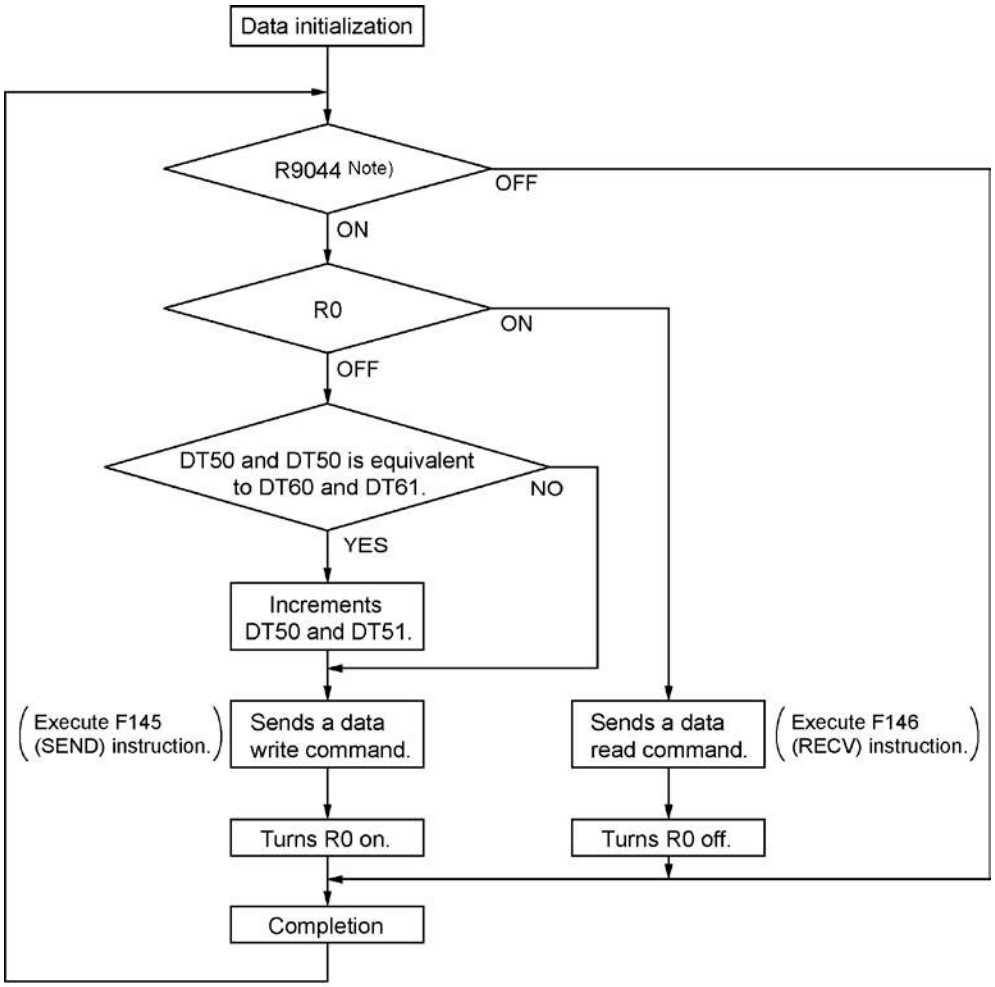

Note) It is R904A for COM2 port.

The above program executes the operation 1 to 3 repeatedly.

4. Updates the write data if the write data (DT50 and DT51) and the read data (DT60 and DT61) are matched.
5. Writes the DT50 and DT51 of the local unit into the data DT0 and DT1 in the unit number 1 from the COM1 port.
6. Reads the data DT0 and dT1 in the unit number 1 into the data DT60 and DT61 of the local unit from the COM1 port.

Note) The above COM1 port will be COM2 port for the COM2 port.

Ramco National www.PanasonicSensors.com 1-800-280-6933

7.7 Ethernet Communication (AFPX-COM5)

7.7.1 AFPX-COM5

Overview

The communication cassette AFPX-COM5 has an Ethernet interface at the COM1 port and a 3-wire RS232C interface at the COM2 port.

The Ethernet at the COM1 port supports the computer link and general-purpose serial communication, and the RS232C at the COM2 port supports the computer link, general-purpose serial communication and MODBUS RTU.
The use of the COM2 port is the same as other cassettes such as the AFPX-COM2, and it is selectable from the COM2 port or the FP-X USB communication.
Although the Ethernet interface is connected to other device via Ethernet, the AFPX-COM5 communicates with the FP-X via RS232C, and it functions as a converter between Ethernet and RS232C.

7.7.2 Functions of APFX-COM5

Port (Name)	Communication function
Ethernet (COM1 port) Note1)	- Computer link (Max. 1 connection (Client)) (Max. 3 connections (Server)) - General-purpose serial communication (Max. 1 connection)
RS232C (COM2 port)	- Computer link - General-purpose serial communication - MODBUS RTU (1:1)

Note1) For Ver1.10 or later, the PC (PLC) link function of the FP-X is available via Ethernet.

7.7.3 Additional Functions (Ver 1.10 or Later)

Additional functions

- Support UDP/IP, too. As it supports two protocols, which are TCP/IP*1) and UDP/IP*2), communication with various devices on a network such as computers can be established.
- Broadcast transmission is available with UDP/IP communication. Also, the PC (PLC) link function of the FP-X is available using broadcast transmission.
- Data can be transmitted to multiple destinations for separate unit numbers (station numbers) (max. 99 units) (when selecting the computer link).
- IP can be automatically get. (DHCP function)
- The information such as own IP address can be confirmed on the FP-X using the network information notification and confirmation functions.

Note) When the firmware version of AFPX-COM5 is older than Ver1.10, it can be upgraded by downloading the later version from our website.
http://industrial.panasonic.com/ac/e/dl_center/software/

Ramco National www.PanasonicSensors.com 1-800-280-6933

Differences between Ver1.00 and Ver1.10

TCP communication setting

Communication mode select	Operation mode select	Ver1.00	Ver1.10
Computer link	Client connection	Not available	Available
	Server connection	Available	Available
General-purpose communication	Client connection	Available	Available
	Server connection	Available	Available

UDP communication setting

Communication mode select	Operation mode select	Transmission method	Ver1.00	Ver1.10
Computer link	Client connection	Broadcast	Not available	Available
		Unicast	Not available	Available
	Server connection	Broadcast	Not available	Available
		Unicast	Not available	Available
General-purpose communication	Not selectable	Broadcast	Not available	Available
		Unicast	Not available	Available

Option setting

Communication mode select	Ver1.00	Ver1.10
Response timeout	Not available	Available
End code	Not available	Available
Judgment time without termination	Not available	Available
Network information notification	Not available	Available
Network information confirmation	Not available	Available
Connection information confirmation	Not available	Available
Target IP address for unit number	Not available	Available

Ramco National www.PanasonicSensors.com 1-800-280-6933

7.7.4 Communication Tool Software Configurator WD (Ver1.10 or Later)

The communication tool software “Configurator WD” is required to set Ethernet communication for the AFPX-COM5. Install the Configurator WD before setting the AFPX-COM5.

The Configurator WD can be downloaded from our website free of charge.
http://industrial.panasonic.com/ac/e/dl_center/software/
(Member registration is required. Free of charge)

The setting is saved in the AFPX-COM5.

IP address setting

Item	Description	Default
Obtain IP address automatically Note1)	When selecting “Obtain an IP address automatically”, an IP address is obtained from the DHCP server. When selecting “Use the following IP address”, an IP address is set manually.	Use the following IP address
Unit name	Unit name for Communication cassette AFPX-COM5 can be specified.	FPX_ET
IP address	IP address of Communication cassette AFPX-COM5 Set an IP address other than 0.0.0.0 and 255.255.255.255.	192.168.1.5
Subnet mask	Netmask of Communication cassette AFPX-COM5	255.255.255.0
Gateway	Gateway of Communication cassette AFPX-COM5	192.168.1.1

Note1) When an error occurs, the ERROR LED will be turned on.

Ramco National www.PanasonicSensors.com 1-800-280-6933

Communication setting

	Item	Description	Default
Common setting	Communica-tion protocol select	Communication protocol of AFPX-COM5 Select TCP or UDP.	TCP
	Communicati on mode	Communication mode of AFPX-COM5 Select Computer link or General communication.	Computer link
	Action mode	Connection mode of AFPX-COM5 Select Client mode or Server mode. When selecting Computer link for Communication mode, Client mode cannot be selected.	Server mode
	Baud rate Note3) (COM1)	Baud rate for communicating with the COM1 port of FP-X. Change the baud rate according to the baud rate for the COM1 port of FP-X. Select 9600 bps or 115200 bps.	9600 bps
	Transmi-ssion method	It is valid when selecting UDP in the communication protocol. Method for transmitting data to partner devices. Select UNICAST or BROADCAST.	UNICAST
Server setting Note1)	Source port No.	Port number that AFPX-COM5 opens. Setting range: 1025 to 32767	9094
	Time out	If AFPX-COM5 not communicate with a destination device during this setting time (seconds) in the state that connection is established, connection will be cut. Setting range: 0 to 1800 s When 0 is set, the connection will not be cut.	0
Client setting Note2)	Destination IP	IP address of a destination device Set an IP address other than 0.0.0.0 and 255.255.255.255.	192.168.1.100
	Destination port No.	Destination port number of a destination device Setting range: 1025 to 32767	9094
	Source port No.	Source port number of a destination device Setting range: 0, 1025 to 32767 When 0 is set, optional.	0
	Time out	If AFPX-COM5 not communicate with a destination device during this setting time (seconds) in the state that connection is established, connection will be cut. Setting range: 0 to 1800 s When 0 is set, the connection will not be cut.	0
	Retry time	When failed in the connection with a destination device. Setting range: 0 to 1800 s	15

Note1) Set when the server mode has been selected for the action mode.

Note2) Set when the client mode has been selected for the action mode.

Note3) As the communication between the FP-X and AFPX-COM5 is performed using serial communication, the baud rate for them should be set to the same value.

Ramco National www.PanasonicSensors.com 1-800-280-6933

Option setting

Item		Description	Default
Response timeout (When selecting the computer link only)		Set the wait time for the response.	5000 ms
End code		This is the code for the AFPX-COM5 to confirm the end of the message (data) to be received from the FP-X. CR, CR+LF or NONE can be selected. Reception continues until the end of the message (CR, CR+LF) will be received. When selecting NONE, the end code is not confirmed.	CR
Judgment time without termination		Set the wait time for the end code. If the next message (data) is not received within the judgment time without termination (ms) after the last received message (data), the AFPX-COM5 judges that is no termination, and performs the following operation. (End code: when selecting CR, CR+LF) The received message (data) is discarded. For TCP, the connection is disconnected. (End code: when selecting NONE) The message (data) is transmitted to the connected destination.	20 ms
Network information	Information area first No.	Set the area of DT to be used for the network information and connection information. Setting range: 3000 to 12000	10000
	Network information notification	When the power turns on, the network information will be notified to the FP-X.	Invalid
	Network information confirmation	When using the computer link and client, the network information can be confirmed.	Invalid
	Connection information confirmation	When using the computer link and server, the connection information can be confirmed from the LAN side.	Invalid
Target IP address for unit No.	Destination unit No. and IP address is specified.	A command is transmitted to the IP address corresponding to the unit number.	Invalid
	Unit No.	Select a unit number. Can be selected from the range of 1 to 99.	Invalid
	IP address	Set an IP address.	192.168.1.100

Ramco National www.PanasonicSensors.com 1-800-280-6933

7.7.5 Communication Mode 1: Computer Link (Ethernet)

The supplement is described below to perform Ethernet communication by the computer link.

Overview

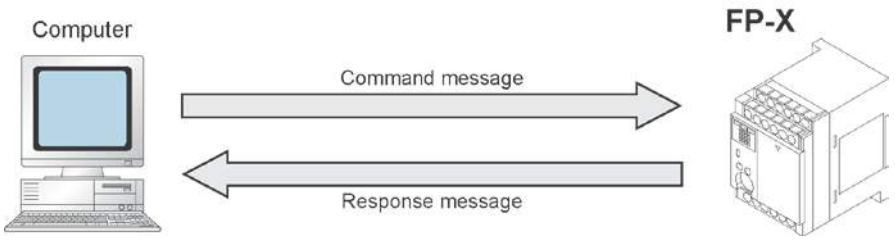

- Communication is conducted between a computer and a PLC using Ethernet by the computer link.
- Remote programming and monitoring is possible via LAN line by using a programming tool such as FPWIN GR.

Outline of operation

- Establish connection between a computer and the FP-X.
- In that case, the connected computer is called “Client” and the connected FP-X is called “Server”. After connection establishment, communication via TCP/IP is conducted. Up to 3 connections can be established at the specified source port.

Ramco National www.PanasonicSensors.com 1-800-280-6933

Setting of communication environment for Computer link (Ethernet)

The following two settings for the FP-X and communication cassette AFPX-COM5 should be set.

- Communication environment of FP-X
- Communication environment of Communication cassette AFPX-COM5

Setting communication environment of FP-X

The programming tool FPWIN GR is used to set the baud rate or communication format of the COM1 port. Select [Option] → [PLC Configuration] in the menu bar, and click [COM1 Port] tab.

Dialog box of PLC system register setting

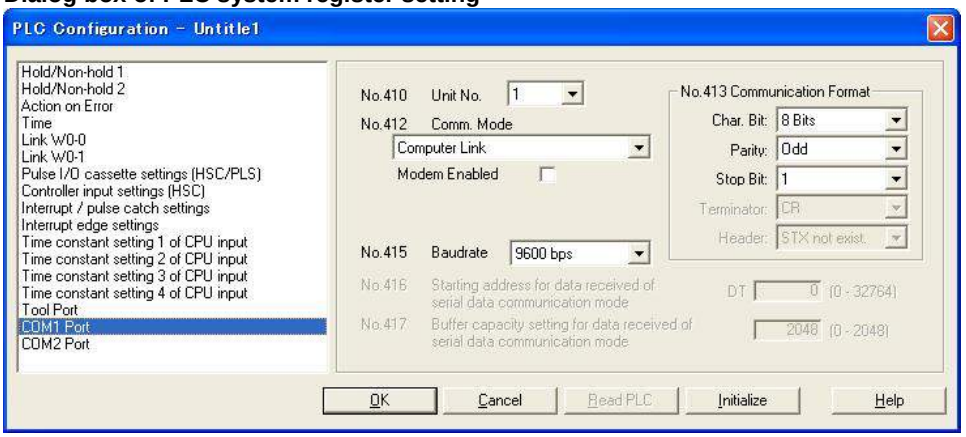

COM1 port setting (AFPX-COM5)

No.	Setting item		Setting value
No.410	Unit number		1 to 99
No.412	Communication mode		Computer link
No.413	Communication format (Fixed)	Character bit	8 bits
		Parity check	Odd
		Stop bit	1 bit
No.415	Baud rate		115200 bps/9600 bps Note1)

Note1) The communication format for Ethernet communication with the COM5 cassette is fixed. Set as the above table.

Note2) Set the baud rate to match the setting of Configurator WD.

Ramco National www.PanasonicSensors.com 1-800-280-6933

Setting Ethernet communication environment of Communication cassette AFPX-COM5
The Configurator WD is used to set Ethernet communication environment of the AFPX-COM5.

Start the Configurator WD.
Search the AFPX-COM5.
Select the AFPX-COM5 from the search result, and set an IP address to connect with a computer. After that, search again. Select the AFPX-COM5, and select [Edit] → [Communication Setting] in the menu, or right-click to select [Communication Setting].

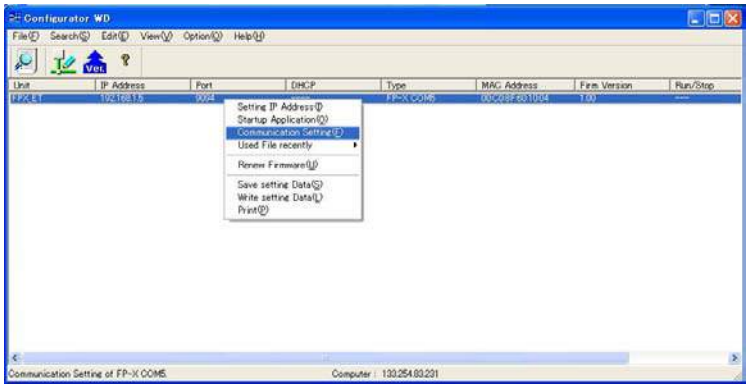

Dialog box of communication setting

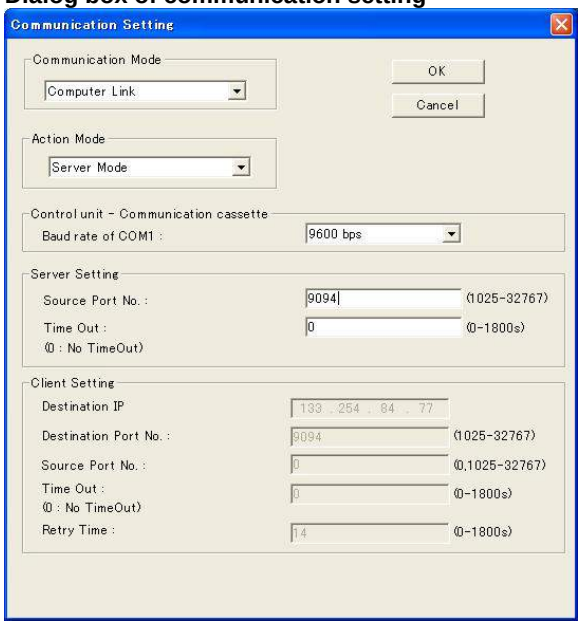

Note:
If the TCP is selected for the communication protocol, up to three connections are established using the computer link (Ethernet), however, when using the programming tool FPWIN GR for connection (using registration monitor command, multi-frame), more than two connections cannot be established. Also, If the UDP is selected for the communication protocol, the UDP communication cannot be used as the programming tool FPWIN GR does not support it, although no restriction on connections.

Ramco National www.PanasonicSensors.com 1-800-280-6933

7.7.6 Communication (Computer Link (Ethernet))

Overview

A 1:1 computer link connects the FP-X and a computer using a UTP cable (CAT5). Communication is conducted via commands from the computer and responses from the PLC.

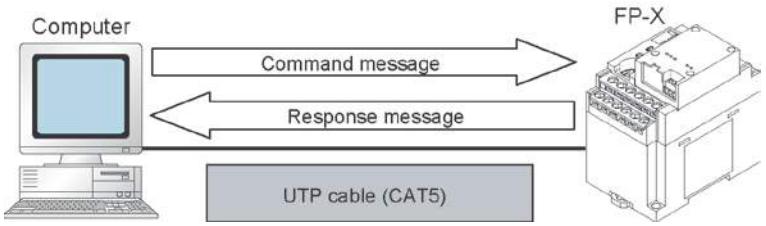

1:1 Communication setting (Computer link (Ethernet))

This setting enables the 1:1 communication between the FP-X and a computer using the computer link (Ethernet).

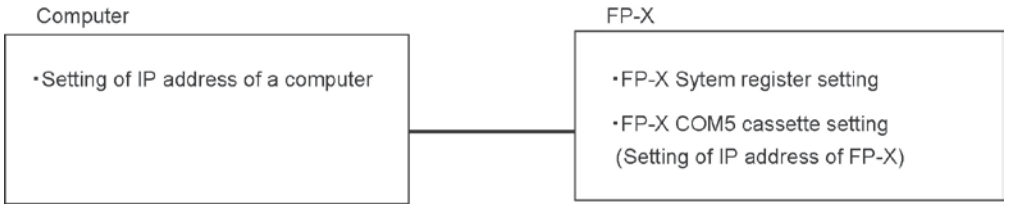

System register setting of FP-X (specified using FPWIN GR)

Dialog box of PLC system register setting

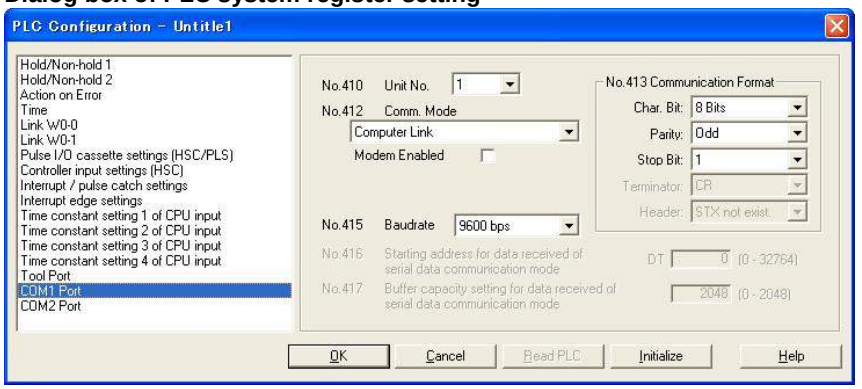

COM1 port setting (AFPX-COM5)

No.	Setting item		Setting value
No.410	Unit number		1
No.412	Communication mode		Computer link
No.413	Communication format (Fixed)	Char. bit	8 bits
		Parity check	Odd
		Stop bit	1 bit
No.415	Baud rate		115200 bps/9600 bps

Note1) The communication format for Ethernet communication with the COM5 cassette is fixed. Set as the above table.

Note2) Set the baud rate to match the setting of Configurator WD.

Ramco National www.PanasonicSensors.com 1-800-280-6933

Setting of Communication cassette AFPX-COM5 (specified using Configurator WD)

IP address setting

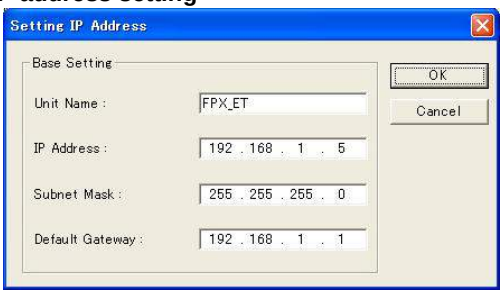

Item	Default
Get IP address	Manual
Unit name	FPX_ET
IP address	192.168.1.5
Subnet mask	255.255.255.0
Default gateway	192.168.1.1

Communication setting

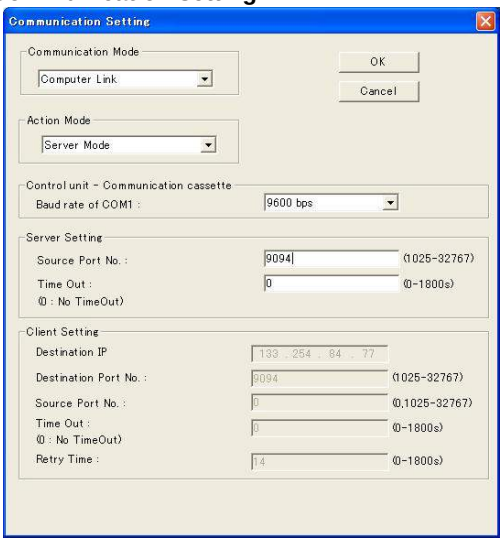

Item	Default
Communication protocol	TCP
Action mode	Server mode
Baud rate (COM1)	115200 bps/9600 bps
Communication mode	Computer link
Source port No.	9094
Time out	0

Note1) Specify the same baud rate as the communication environment setting of the COM1 port of the FP-X.

Setting of a computer

IP address setting

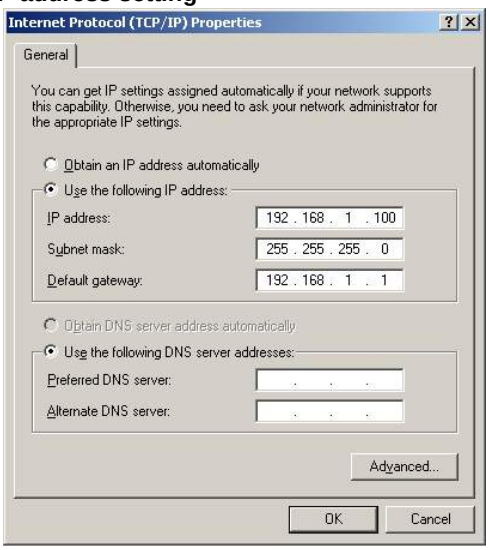

Item	Default
IP address	192.168.1.100 Note)
Subnet mask	255.255.255.0
Default gateway	192.168.1.1

Note) The IP address of a computer is an example. Set the IP addresses of the computer and communication cassette AFPX-COM5 according to the network environment to be used.

Ramco National www.PanasonicSensors.com 1-800-280-6933

7.7.7 1:N Communication (Computer Link (Ethernet))

Overview

A computer is connected respective PLCs through Ethernet. The computer and the PLC communicate via commands and responses: The computer sends a command specifying the destination IP address, and the PLC with that IP address sends a response back to the computer.
It is no problem if the unit number of the PLC overlaps with other PLCs.

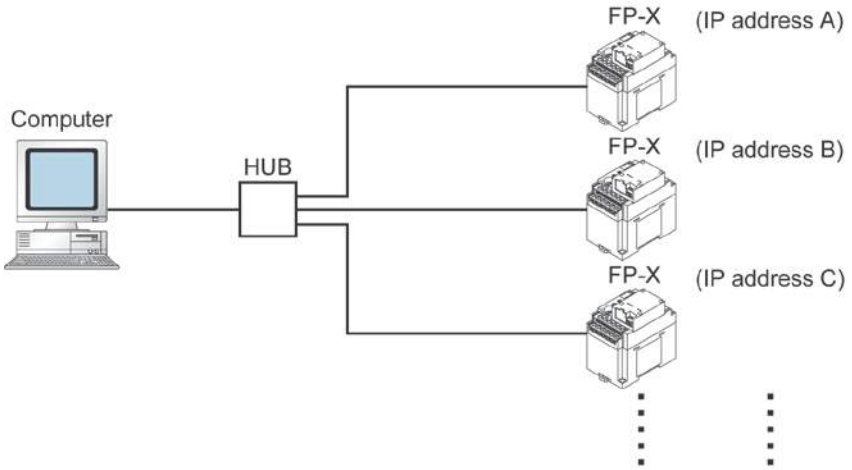

1:N Communication setting (Computer link (Ethernet))

The settings for the FP-X system register and communication cassette AFPX-COM5 are the same as the settings for the connection (computer link (Ethernet)) by a 1:1 communication.
However, set the IP address for a FP-X not to overlap with other FP-X units.

Ramco National www.PanasonicSensors.com 1-800-280-6933

7.7.8 MEWTOCOL Master Communication Setting (Ver 1.10)

For using as the MEWTOCOL master, set the AFPX-COM5 to the computer link and client. Also, specifying the simultaneous transmission by broadcast or the target IP address for unit number in the option setting enables the communication with various PLCs.

MEWTOCOL master setting in TCP

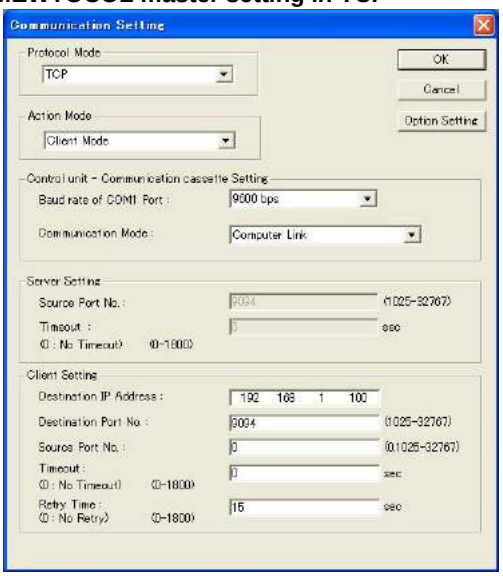

Item	Default
Communication protocol	TCP
Action mode	Client connection
Baud rate (COM1)	15200 bps/9600 bps Note)
Communication mode	Computer link
Destination IP address	IP address of destination
Destination port No.	1025 to 32767
Source port No.	0, 1025 to 32767
Timeout	0 to 1800 secs
Retry time	0 to 1800 secs

Note1) Specify the same baud rate as the communication environment setting of the COM1 port of the FP-X.

Note:

If you want to transmit data when connection is not established, the connection can be established from the AFPX-COM5 and data can be transmitted.

In the TCP, it takes some time for connection. The connection timeout for the AFPX-COM5 is the same as the response timeout value. Set the timeout time for the SEND/RECV instruction longer than the response timeout value to judge the connection timeout.

Ramco National www.PanasonicSensors.com 1-800-280-6933

MEWTOCOL master setting in UDP

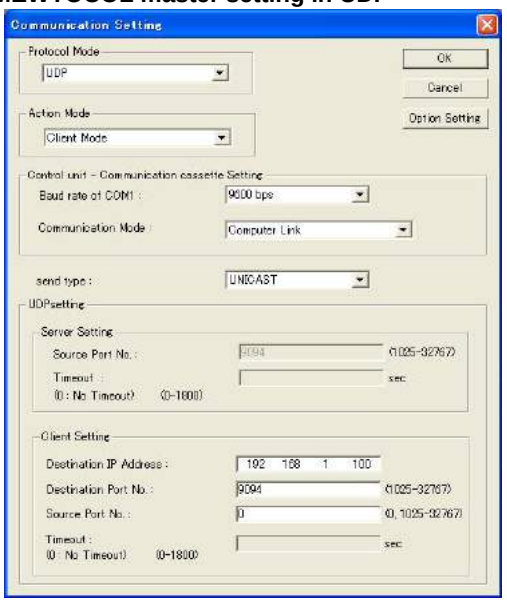

Item	Default
Communication protocol	UDP
Action mode	Client connection
Baud rate (COM1)	15200 bps/9600 bps Note1)
Communication mode	Computer link
Send type	UNICAST/BROADCAST Note2)
Destination IP address	IP address of destination
Destination port No.	1025 to 32767
Source port No.	0, 1025 to 32767

Note1) Specify the same baud rate as the communication environment setting of the COM1 port of the FP-X.

Note2) When selecting BROADCAST, the setting of the destination IP address is not required.

Note:

After the AFPX-COM5 is powered on, it will take about 5 seconds for initializing the Ethernet. Until the Ethernet is initialized, data cannot be transmitted or received. For the Ethernet communication, programming is necessary to start the communication after 5 seconds since the power turned on.

Generally, as a router does not transmit a broadcast packet, communication over the router cannot be achieved. Using the broadcast, processing load is applied on all equipment on the network. Confirm that the broadcast does not affect other equipment before using it.

Ramco National www.PanasonicSensors.com 1-800-280-6933

7.7.9 MEWTOCOL Master (Ethernet) (Sample Program) (Ver 1.10 or Later)

Overview

MEWTOCOL communication can be performed with the FP-X using the F145 and F146 instructions. The following sample program executes 4 MEWTOCOL commands in sequence for 2 slave units using the F145 and F146 instructions.

Note: It is available for the transistor type and relay type of Ver 1.21 or later.

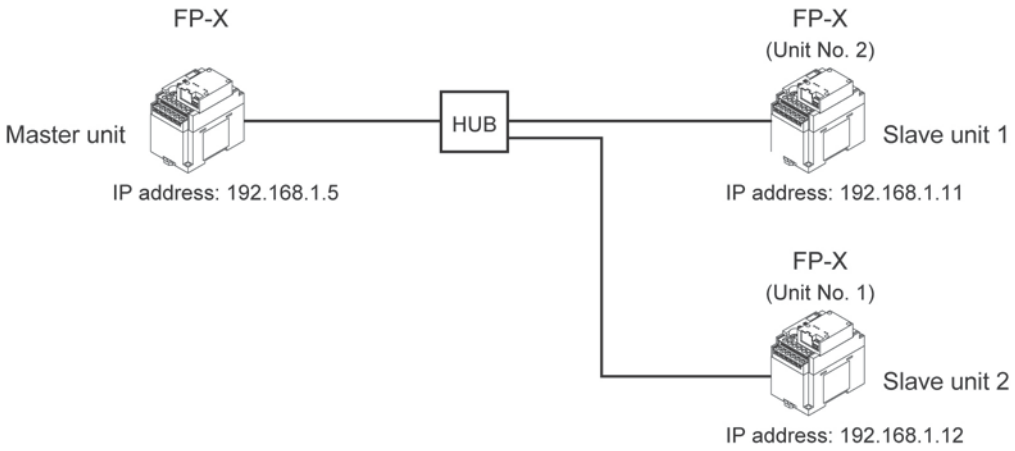

Description

R100: Stores the data for 10 words from DT1000 of the slave unit 1 into the area from DT100 of the master unit.

R101: Writes the data for 10 words from DT100 of the master unit to the area form DT1010 of the slave unit 1.

R102: Stores the data for 10 words from DT1000 of the slave unit 2 into the area from DT120 of the master unit.

R103: Writes the data for 10 words from DT130 of the master unit to the area form DT1010 of the slave unit 2.

Set the system registers for each units by a tool software (such as FPWIN GR).

	System register setting	
Master unit	No. 412:	Computer link mode
	No. 415:	115200 bps
	No. 413:	8 bits, Odd, 1 bit
Slave unit 1	No. 410:	Unit No. 1
	No. 412:	Computer link mode
	No. 415:	115200 bps
	No. 143	8 bits, Odd, 1 bit
Slave unit 2	No. 410:	Unit No. 2
	No. 412:	Computer link mode
	No. 415:	115200 bps
	No. 413:	8 bits, Odd, 1 bit

Ramco National www.PanasonicSensors.com 1-800-280-6933

1. When using the MEWTOCOL master function in TCP

Set as follows for each unit using Configurator WD.

	IP address setting	Communication setting	Option setting
Master unit	IP address: 192.168.1.5 Netmask: 255.255.255.0 Gateway: 192.168.1.1	Communication protocol: TCP Action mode: Client connection Baud rate: 115200 bps Communication mode: Computer link Destination IP address: 192.168.1.11 Destination port No.: 9094 Source port No.: 0 Timeout: 0 Retry time: 15	Destination unit No. and IP address is specified: On Target IP address for unit No.: No.1: 192.168.1.11 No.2: 192.168.1.12
Slave unit 1	IP address: 192.168.1.11 Netmask: 255.255.255.0 Gateway: 192.168.1.1	Communication protocol: TCP Action mode: Server connection Baud rate: 115200 bps Communication mode: Computer link Source port No.: 9094 Timeout: 0	Not necessary.
Slave unit 2	IP address: 192.168.1.2 Netmask: 255.255.255.0 Gateway: 192.168.1.1	Communication protocol: TCP Action mode: Server connection Baud rate: 115200 bps Communication mode: Computer link Source port No.: 9094 Timeout: 0	Not necessary.

2. When using the MEWTOCOL master function in UDP, UNICAST communication

Set as follows for each unit using Configurator WD.

	IP address setting	Communication setting	Option setting
Master unit	IP address: 192.168.1.5 Netmask: 255.255.255.0 Gateway: 192.168.1.1	Communication protocol: UDP Action mode: Client connection Baud rate: 115200 bps Communication mode: Computer link Send type: UNICAST Destination IP address: 192.168.1.11 Destination port No.: 9094 Source port No.: 0	Destination unit No. and IP address is specified: On Target IP address for unit No.: No.1: 192.168.1.11 No.2: 192.168.1.12
Slave unit 1	IP address: 192.168.1.11 Netmask: 255.255.255.0 Gateway: 192.168.1.1	Communication protocol: UDP Action mode: Server connection Baud rate: 115200 bps Communication mode: Computer link Send type: UNICAST Source port No.: 9094	Not necessary.
Slave unit 2	IP address: 192.168.1.2 Netmask: 255.255.255.0 Gateway: 192.168.1.1	Communication protocol: UDP Action mode: Server connection Baud rate: 115200 bps Communication mode: Computer link Send type: UNICAST Source port No.: 9094	Not necessary.

Ramco National www.PanasonicSensors.com 1-800-280-6933

3. When using the MEWTOCOL master function in UDP, BROADCAST communication

Set as follows for each unit using Configurator WD.

	IP address setting	Communication setting	Option setting
Master unit	IP address: 192.168.1.5 Netmask: 255.255.255.0 Gateway: 192.168.1.1	Communication protocol: UDP Action mode: Client connection Baud rate: 115200 bps Communication mode: Computer link Send type: BROADCAST Destination IP address: 192.168.1.11 Destination port No.: 9094 Source port No.: 0	Not necessary.
Slave unit 1	IP address: 192.168.1.11 Netmask: 255.255.255.0 Gateway: 192.168.1.1	Communication protocol: UDP Action mode: Server connection Baud rate: 115200 bps Communication mode: Computer link Send type: BROADCAST Source port No.: 9094	Not necessary.
Slave unit 2	IP address: 192.168.1.2 Netmask: 255.255.255.0 Gateway: 192.168.1.1	Communication protocol: UDP Action mode: Server connection Baud rate: 115200 bps Communication mode: Computer link Send type: BROADCAST Source port No.: 9094	Not necessary.

Ramco National www.PanasonicSensors.com 1-800-280-6933

Master unit sample program

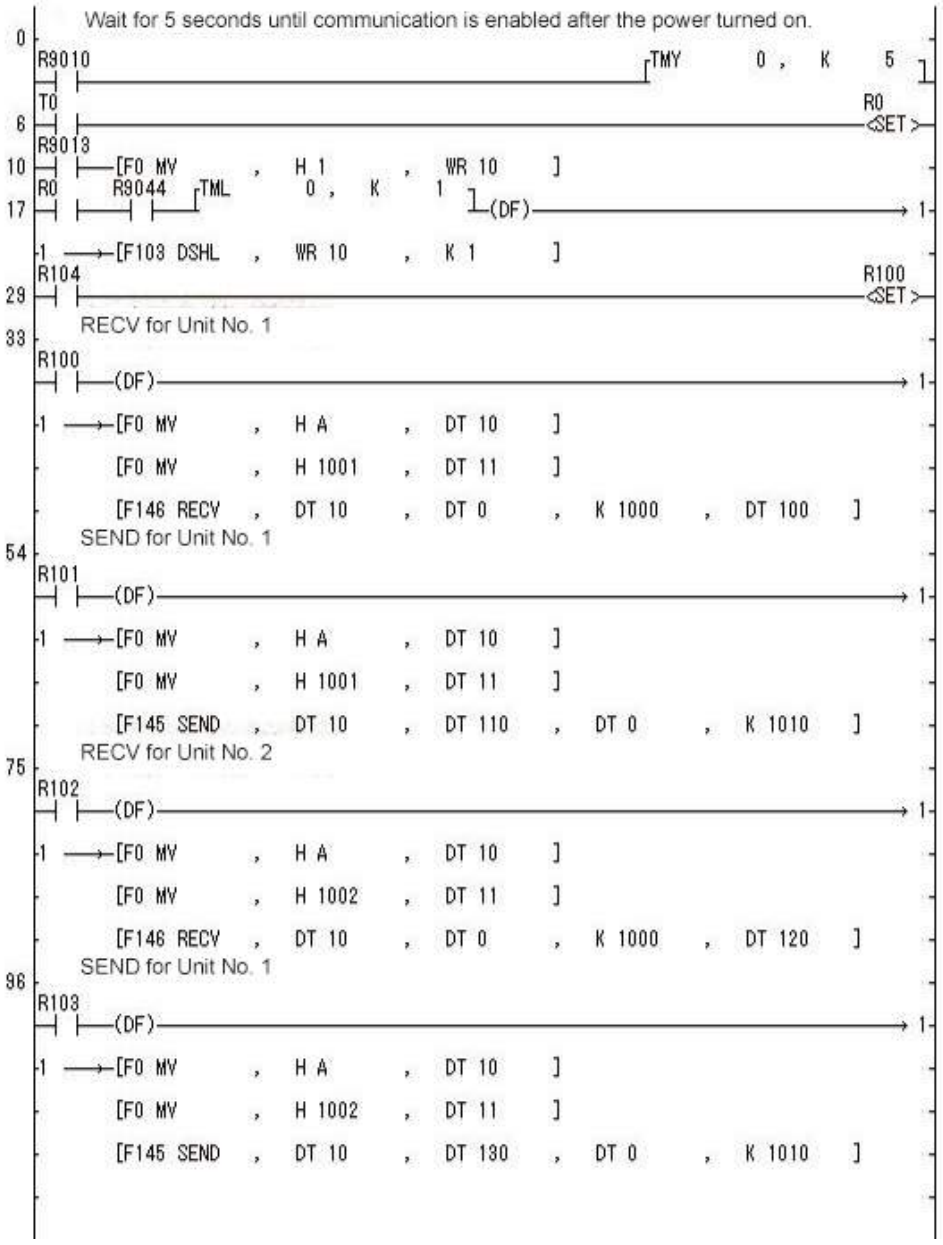

Reference: For information on the F145(SEND) and F146(RECV) instructions, <7.7.3 Communication Tool Software Configurator WD>

Ramco National www.PanasonicSensors.com 1-800-280-6933

7.7.10 Communication Function 2: General-purpose Serial Communication (Ethernet)

The supplement is described below to conduct Ethernet communication by the general-purpose serial communication.

Reference: <7.4 Communication Function 2: General-purpose Serial Communication>

Overview

- Data can be sent and received between the FP-X and an external device using Ethernet.
- Data is read from and written to an external device connected to Ethernet by means of FP-X data registers, and the programs are required for the FP-X.

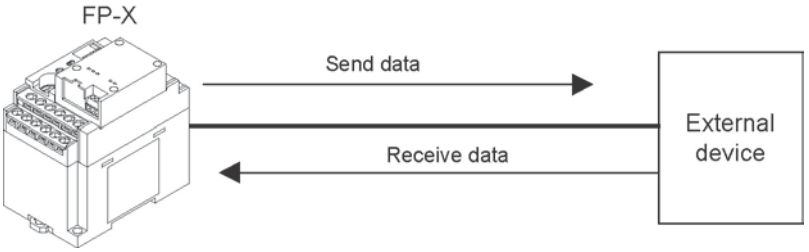

Outline of operation

- Connection with an external device is established using the general-purpose serial communication (Ethernet). Number of connection is one.
- Select either the client mode or server mode.
- In case of the client mode, connection is established by the AFPX-COM5 for a predetermined IP address after turning on the power supply of the FP-X.
- There are “Send data” and “Receive data” for the data transfer with an external device.

Ramco National www.PanasonicSensors.com 1-800-280-6933

Setting for using the general-purpose serial communication (Ethernet)
The following two settings for the FP-X and communication cassette AFPX-COM5 should be set.
- Communication environment of FP-X
- Communication environment of Communication cassette AFPX-COM5

Setting communication environment of FP-X
The programming tool FPWIN GR is used to set the baud rate or communication format of the COM1 port. Select [Option] → [PLC Configuration] in the menu bar, and click [COM1 Port] tab.

Dialog box of PLC system register setting

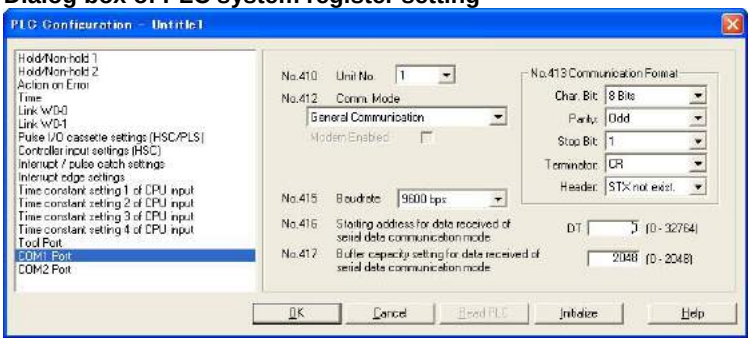

COM1 port setting (AFPX-COM5)

No.	Setting item		Setting value
No.410	Unit number		1 to 99
No.412	Communication mode		General communication
No.413	Communication format	Character bit	8 bits
		Parity check	Odd
		Stop bit	1 bit
		Terminator	CR, CR+LF, None
		Header	STX not exist, STX exists
No.415	Baud rate		115200 bps/9600 bps Note1)

Note1) The communication format for Ethernet communication with the COM5 cassette is fixed. Set as the above table.
Note2) Set the baud rate to match the setting of Configurator WD.

Setting Ethernet communication environment of Communication cassette AFPX-COM5
The Configurator WD is used to set Ethernet communication environment of the AFPX-COM5.

Start the Configurator WD.
Search the AFPX-COM5.
Select the AFPX-COM5 from the search result, and set an IP address to connect with a computer. After that, search again. Select the AFPX-COM5, and select [Edit] → [Communication Setting] in the menu, or right-click to select [Communication Setting].

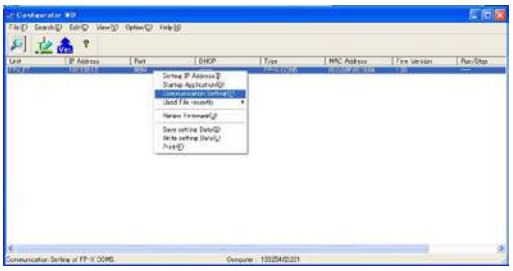

Ramco National www.PanasonicSensors.com 1-800-280-6933

[When Communication cassette AFPX-COM5 is in the TCP client mode]

Dialog box of communication setting: Setting of AFPX-COM5

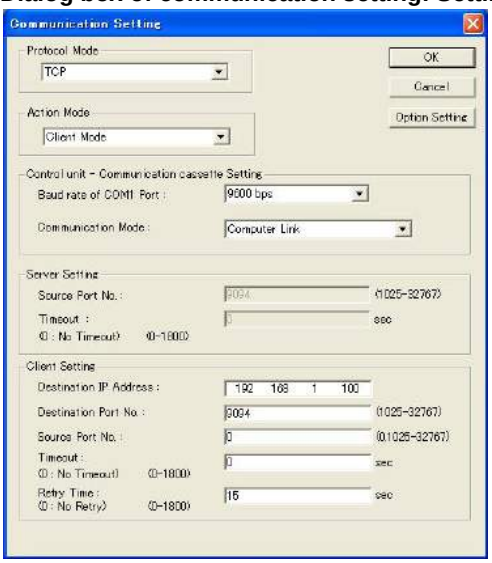

Item	Setting value
Communication protocol	TCP
Action mode	Client mode
Baud rate (COM1)	115200 bps/9600 bps Note)
Communication mode	General communication
Destination IP No.	Destination IP address
Destination port No.	1025 to 32767
Source port No.	0, 1025 to 32767
Time out	0 to 1800 s
Retry time	0 to 1800 s

Note) Specify the same baud rate as the communication environment setting of the COM1 port of the FP-X.

[When Communication cassette AFPX-COM5 is in the TCP server mode]

Dialog box of communication setting: Setting of AFPX-COM5

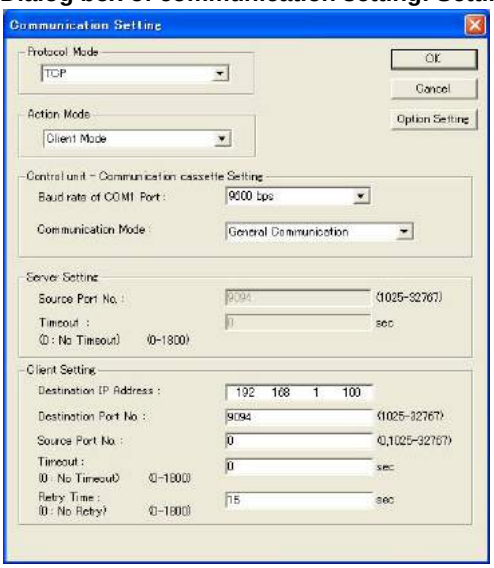

Item	Setting value
Communication protocol	TCP
Action mode	Client mode
Baud rate (COM1)	115200 bps/9600 bps Note)
Communication mode	General communication
Destination port No.	1025 to 32767
Timeout	0 to 1800 s

Note) Specify the same baud rate as the communication environment setting of the COM1 port of the FP-X.

Ramco National www.PanasonicSensors.com 1-800-280-6933

[When Communication cassette AFPX-COM5 is in the UDP mode]

Dialog box of communication setting: Setting of AFPX-COM5

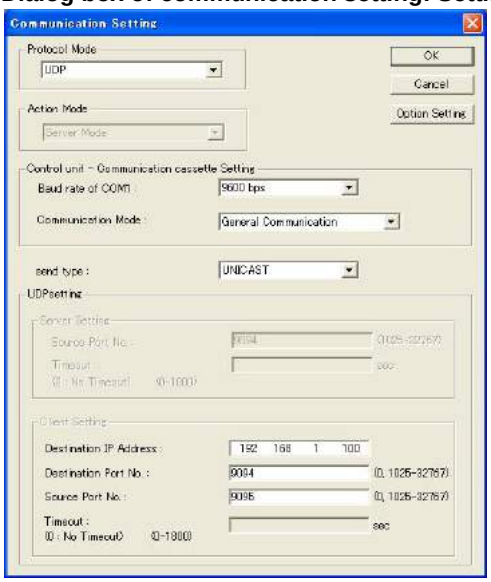

Item	Setting value
Communication protocol	UDP
Baud rate (COM1)	115200 bps/9600 bps Note1)
Communication mode	General communication
Send type	UNICAST/BROADCAST Note2)
Destination IP No.	Destination IP address
Destination port No.	1025 to 32767
Source port No.	0, 1025 to 32767

Note1) Specify the same baud rate as the communication environment setting of the COM1 port of the FP-X.

Note2) When selecting BROADCAST, the setting of the destination IP address is not required.

Note:

Initializing Ethernet takes approx. 5 seconds on the AFPX-COM5 after turning on the power supply. Until it finishes, data cannot be sent or received. For Ethernet communication, programming is necessary to start communication after a lapse of 5 seconds after the power activation.

Ramco National www.PanasonicSensors.com 1-800-280-6933

7.7.11 PC(PLC) Link Communication (Ethernet) (Ver 1.10 or Later)

Overview

Data sharing is available using the PC (PLC) link function of the FP-X via Ethernet.
How to use and set is the same as the PC(PLC) link via RS485.

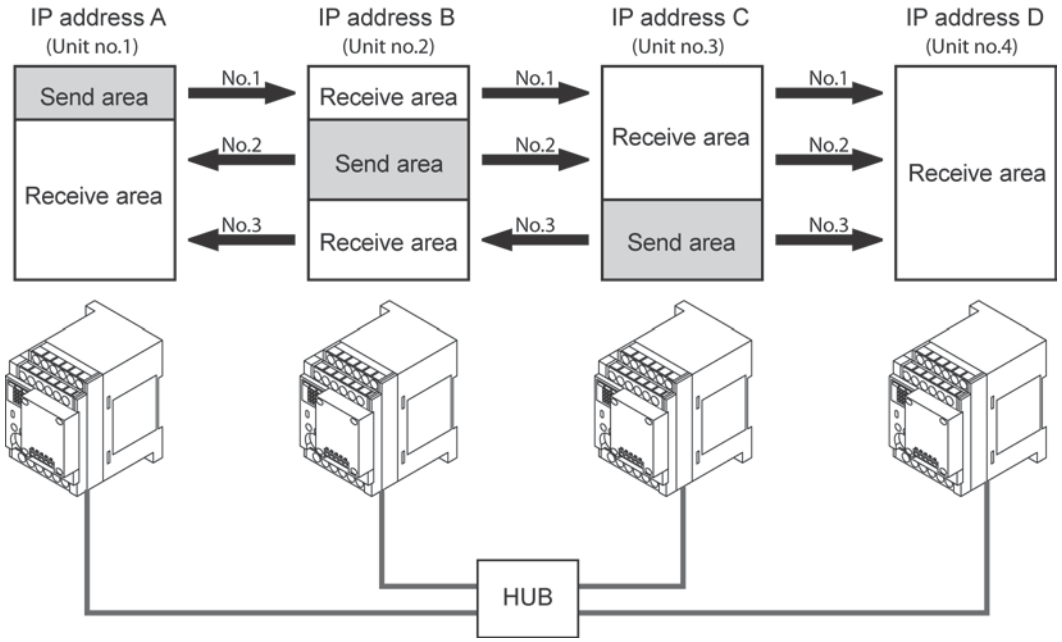

Ramco National www.PanasonicSensors.com 1-800-280-6933

PC(PLC) link communication setting

When the PC(PLC) link function has been selected on the FP-X, the baud rate is automatically 115200 bps. Set the baud rate in the COM1 port communication setting for the AFPX-COM5 to 115200 bps as well.

Setting Ethernet communication environment of Communication cassette AFPX-COM5

The Configurator WD is used to set Ethernet communication environment of the AFPX-COM5.

Dialog box of Communication setting

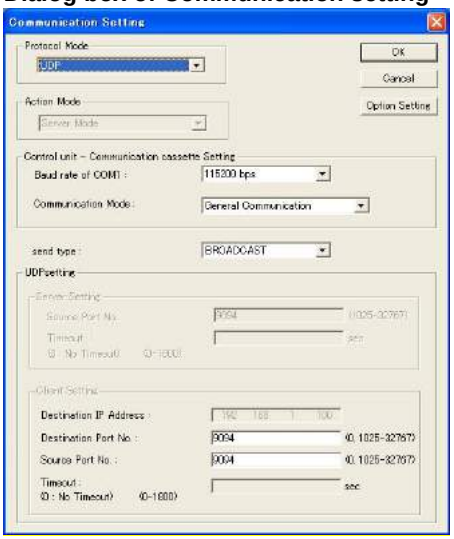

Setting item	Setting value
Communication protocol	UDP
Baud rate	115200bps
Communication mode	General-purpose communication
Send type	BROADCAST
Destination port No.	1025 to 32767
Source port No.	0、1025 to 32767

Note1) Specify the same number for the destination port No. and the source port No. for the AFPX-COM5 to be used in the PC(PLC) link.

Setting communication environment of FP-X

The programming tool FPWIN GR is used to set the baud rate or communication format of the COM1 port.

Select [Option] → [PLC Configuration] in the menu bar, and click [COM1 Port] tab.

Dialog box of PLC Configuration setting

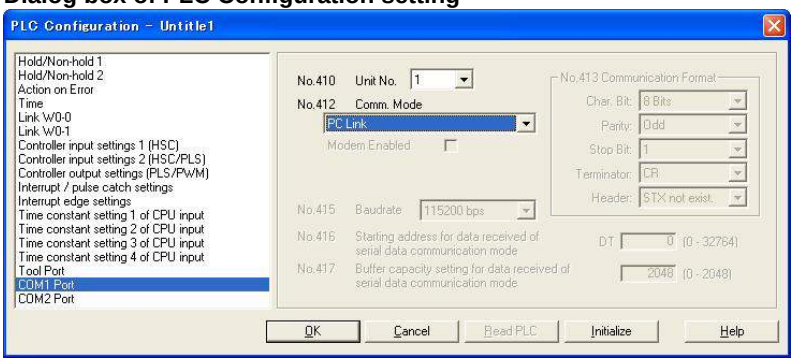

No.	Setting item	Default
No.410	Unit No.	1
No.412	Communication mode	PC link

Do not use the same unit number for multiple FP-X units.

Ramco National www.PanasonicSensors.com 1-800-280-6933

7.7.12 Applied Usage (Ethernet) (Ver 1.10 or Later)

- How to confirm the network information on the FP-X.

The network information (own IP address, destination IP address, destination port No., version) that has been set for the AFPX-COM5 can be confirmed from the FP-X by the option setting. The connection information (destination IP address, own IP address, version) of the AFPX-COM5 can be confirmed from the LAN side.

Dialog box of option setting

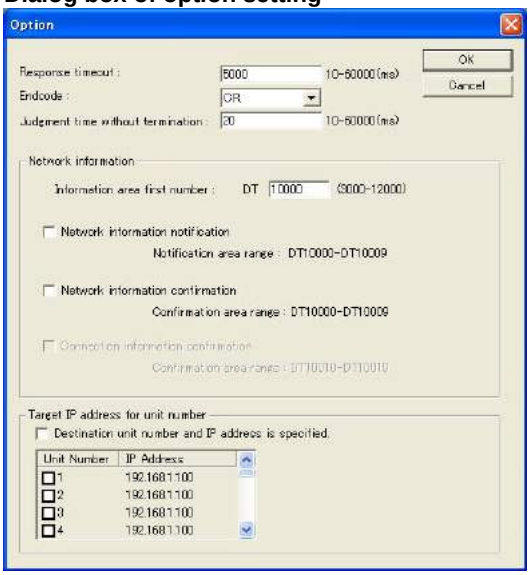

1. **Network information notification: Network information is notified to the FP-X from the AFPX-COM5. (Network information is written to the data register of FP-X by the AFPX-COM5.)**
2. **Network information confirmation: Network information on the AFP-COM5 can be confirmed from the FP-X. (The virtual data register within the AFP-COM5 is read from the FP-X.)**
3. **Connection information confirmation: Connection information on the AFPX-COM5 can be confirmed from a destination device from a device on a LAN. (The virtual data register within the AFPX-COM5 is read from a destination device on a LAN.)**

Ramco National www.PanasonicSensors.com 1-800-280-6933

- Network information notification area

Set the area to be used for the network information notification, network information confirmation and connection information confirmation.

When DT1000 (default) is set for the network information notification area, the following areas will be used.

Network information notification and network information confirmation areas

Register No.	Description (Higher bytes)	Description (Lower bytes)	Explanation
DT10000	Error code Note1)	Own IP address (1st)	- When own IP address is 192.168.1.5, H00C0 (K192) is notified/confirmed in DT10000, and H00A8 (K168) is in DT10001. - When destination port No. is 9094, H2386 (K9094) is notified/confirmed in DT10008. - When the version of AFPX-COM5 is 1.10, H1100 is notified/confirmed. Note) The destination IP address and destination port No. can be notified/confirmed only when selecting the computer link and client setting.
DT10001	0x00 (reserve)	Own IP address (2nd)	
DT10002	0x00 (reserve)	Own IP address (3rd)	
DT10003	0x00 (reserve)	Own IP address (4th)	
DT10004	0x00 (reserve)	Destination IP address (1st)	
DT10005	0x00 (reserve)	Destination IP address (2nd)	
DT10006	0x00 (reserve)	Destination IP address (3rd)	
DT10007	0x00 (reserve)	Destination IP address (4th)	
DT10008	Destination port No.		
DT10009	Version of AFPX-COM5		

Note1) Error code: 0: Normal, 1: DHCP acquisition error, 2: IP address duplicate error

Connection information confirmation area

Register No.	Description (Higher bytes)	Description (Lower bytes)
DT10010	Error code Note1)	Destination IP address (1st)
DT10011	0x00 (reserve)	Destination IP address (2nd)
DT10012	0x00 (reserve)	Destination IP address (3rd)
DT10013	0x00 (reserve)	Destination IP address (4th)
DT10014	0x00 (reserve)	Own IP address (1st)
DT10015	0x00 (reserve)	Own IP address (2nd)
DT10016	0x00 (reserve)	Own IP address (3rd)
DT10017	0x00 (reserve)	Own IP address (4th)
DT10018	0x0000 (reserve)	
DT10019	Version of AFPX-COM5	

Ramco National www.PanasonicSensors.com 1-800-280-6933

- Network information notification

If the network information notification setting is enabled, the AFPX-COM5 notifies the network information to the FP-X on completion of the initialization of Ethernet. (Ethernet is initialized after the power turns on, and when the unit is restarted after the change in settings.) The information is notified by the data area write command (“WD”) of 10 words from the information area first number with MEWTOCOL. (For the memory area, “DT” is fixed. For the unit number, “EE” is fixed.) Using this notification enables the completion of the initialization of Ethernet to be confirmed in a ladder program and to start communication.)

When using the general-purpose communication, start the communication after receiving the data area write command for the network information notification and after the response timeout time.

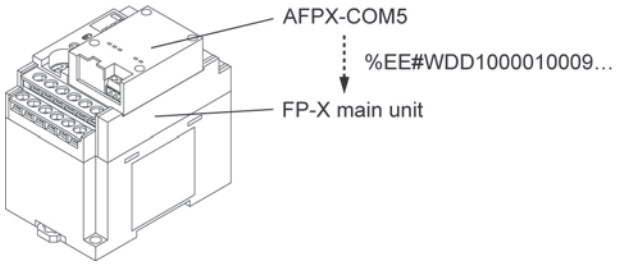

[Sample program] (Set DT10000 in the network information notification area.)

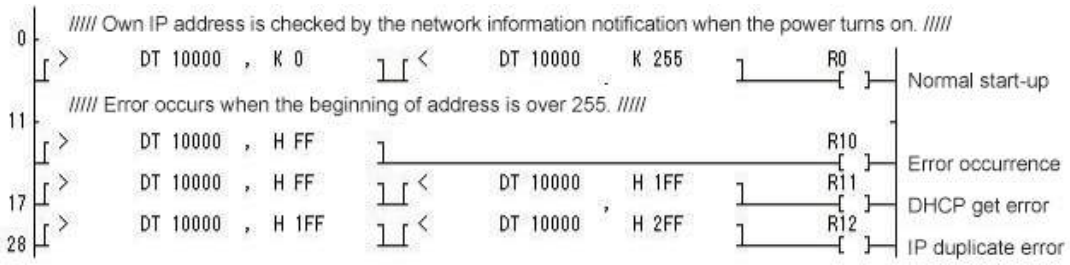

- Network information confirmation

When selecting the computer link and client setting, the network information can be confirmed from the FP-X by enabling the network information confirmation setting. It can be confirmed by reading the confirmation area by the MEWTOCOL data area read command (“RD”). (For the memory area, “DT” is fixed. The unit number is arbitrary.) If the network information confirmation setting is enabled, the AFPX-COM5 responds to the MEWTOCOL data area read command for the confirmation area regardless of unit numbers.

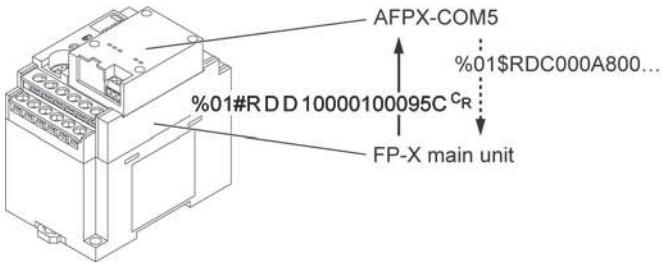

Ramco National www.PanasonicSensors.com 1-800-280-6933

[Sample program] (Set DT10000 in the network information notification area.)

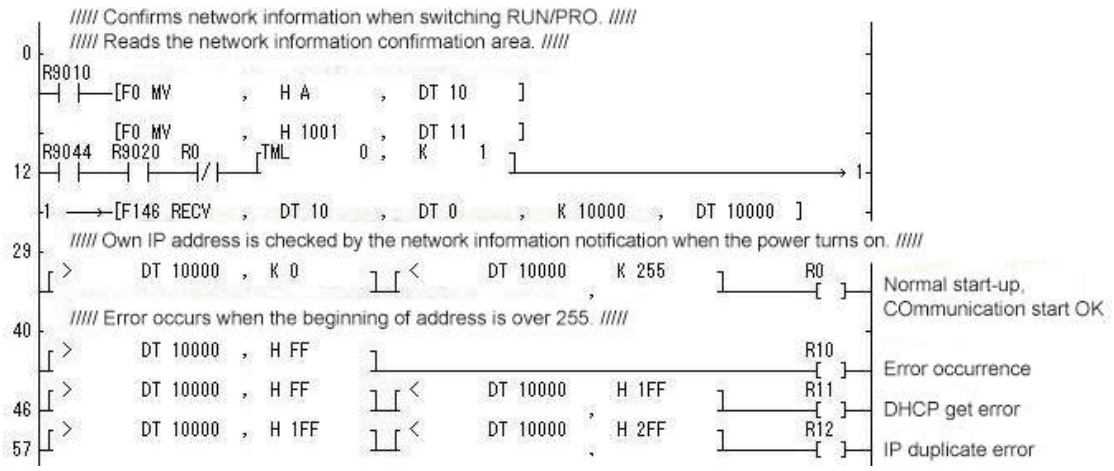

- Connection information confirmation

When selecting the computer link and server setting, the connection information can be confirmed from the LAN side by enabling the connection information confirmation setting. It can be confirmed by reading the confirmation area by the MEWTOCOL data area read command (“RD”) from the LAN. (For the memory area, “DT” is fixed.) If the connection information confirmation setting is enabled, the AFPX-COM5 responds to the MEWTOCOL data area read command for the confirmation area regardless of unit numbers.

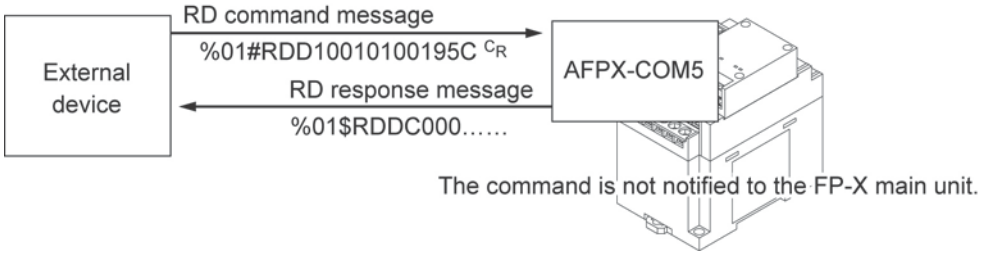

Ramco National www.PanasonicSensors.com 1-800-280-6933

- How to transmit a command message to each unit

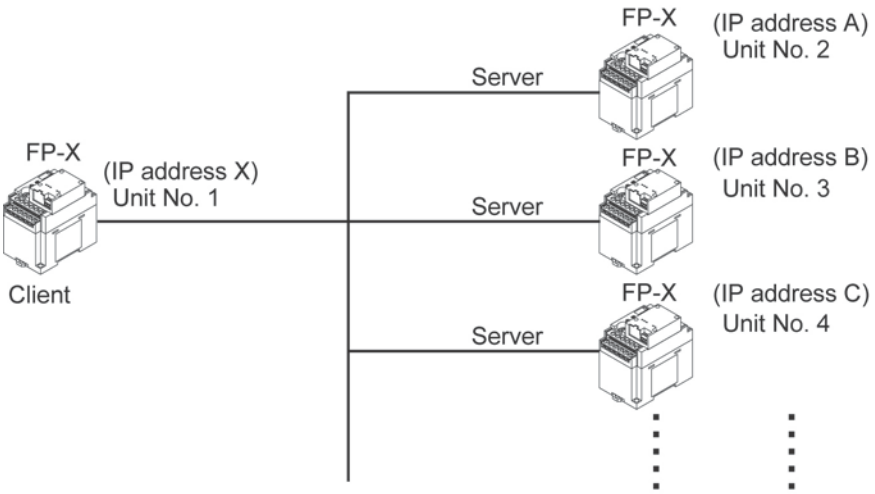

- Target IP address for unit number

If “Destination unit number and IP address is specified” is checked, a command can be sent to the IP address corresponding to each unit number.

Settable conditions

- When selecting the client and computer link
- When selecting the UDP and general-purpose communication
- When selecting the broadcast (IP address takes priority, and a command is transmitted via unicast.)

Setting method

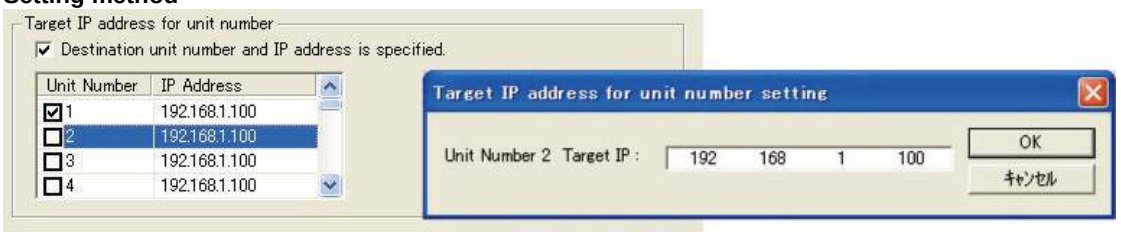

1. Check “Destination unit number and IP address is specified.” in the [Option] dialog box.
2. Check the destination unit number you want to set, and double-click the IP address.
   (Unit numbers 1 to 99)
3. Specify the destination IP address that is corresponding to the unit number.

Note) When connecting to the IP corresponding to a unit number via TCP, a new connection should be established after disconnecting the existing connection.

Ramco National www.PanasonicSensors.com 1-800-280-6933

7.7.13 Example of Connections (Ethernet) (Ver 1.10 or Later)

- Connection with FP2 ET-LAN unit

Overview

Connection can be established with a maximum of 8 FP-X simultaneously using a FP2 ET-LAN unit, and transmission is performed by the computer link.

Example of connection

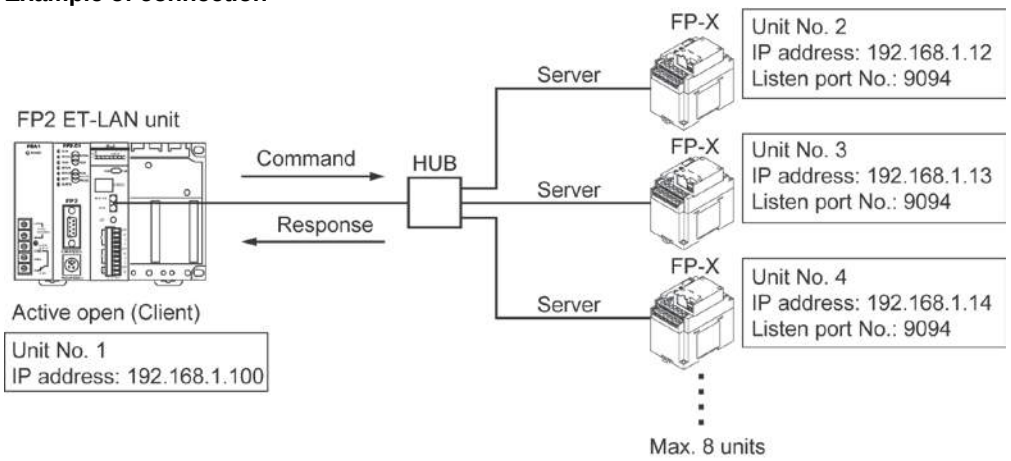

- Setting of FP2 ET-LAN unit

Item	Setting value
Communication method	TCP/IP
Open method	Active open
Application in which connection is used	General-purpose communication (Transparent communication)
Source node port No.	Arbitrary
Destination node IP address	IP address of the destination FP-X
Destination node port No.	9094 (can be changed.)

Ramco National www.PanasonicSensors.com 1-800-280-6933

- Setting of FP-X

1) FP-X System register setting

No. 412: Computer link mode

2) Setting of AFPX-COM5

Item	Setting value
Communication protocol	TCP
Action mode	Server mode
Communication mode	Computer link
Source port No.	9094
Time out	0

UDP/IP can be used for the communication method.
In that case, change the communication method of the FP2 ET-LAN unit to UDP/IP.
Set the communication protocol of the AFP-COM5 to UDP, and set the send type to UNICAST.

Note:

For MEWTOCOL master function of the FP2 ET-LAN unit, MEWTOCOL-COM is not available. For communicating with the FP-X by the computer link, transmit the MEWTOCOL-COM data format using the transparent communication on the FP2 ET-LAN unit. In this case, an exclusive header is not required for the ET-LAN unit.

Ramco National www.PanasonicSensors.com 1-800-280-6933

7.7.14 Initialization Procedure

Overview

- The Ethernet communication environment setting of the AFPX-COM5 can be initialized.

Initialization procedure

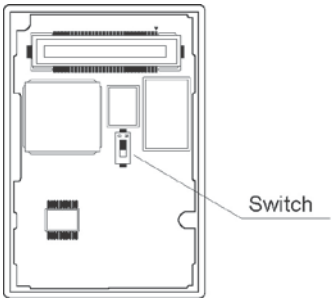

1. Turn on the switch at the back of the AFPX-COM5.
2. Install the AFPX-COM on the FP-X and turn on the power supply.
3. The ERR. LED of the AFPX-COM5 flashes every 5 seconds. (Initialization completes.)
4. Turn off the power supply of the FP-X. Remove the AFPX-COM5.
5. Turn off the switch at the back of the AFPX-COM5.
6. Install the AFPX-COM5 on the FP-X, and turn on the power supply.

Note) The Ethernet communication setting (including the IP address) cannot be changed when the switch at the back of the AFPX-COM5 is on. Always turn it off after initialization.

Setting for initialization

IP address setting

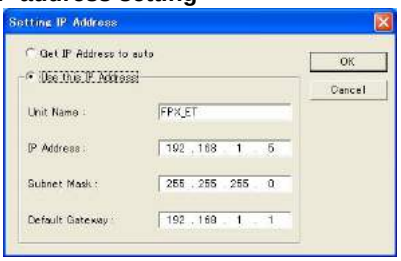

Item	Default
Get IP address	Manual
Unit name	FPX_ET
IP address	192.168.1.5
Subnet mask	255.255.255.0
Default gateway	192.168.1.1

Communication setting

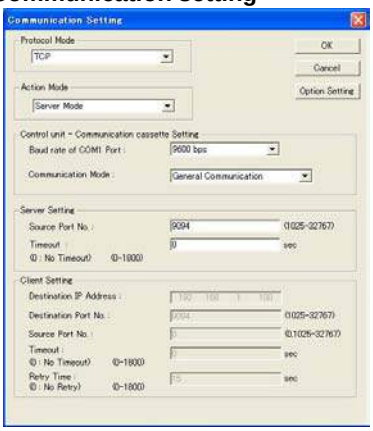

Item	Default
Communication protocol	TCP
Action mode	Server mode
Baud rate (COM1)	9600 bps
Communication mode	Computer link
Source port No.	9094
Time out	0

Ramco National www.PanasonicSensors.com 1-800-280-6933

Chapter 8

Application Cassette

8.1 Expansion of Application Cassette

Following two methods of expansion are available for the FP-X.

1. **Add on the FP-X expansion unit or FP0 expansion unit (expansion FP0 adapter) with the expansion cable.**
2. **Add on the add-on cassette in the cassette mounting part of the FP-X control unit.**

For the FP-X, the add-on cassette (application cassette and communication cassette) can be installed on the FP-X control unit. The number of the expansion units that can be installed varies depending on the types of the control unit.

C14 Control unit

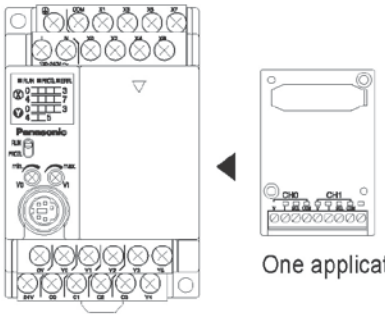

One application cassette can be installed.

C30 Control unit

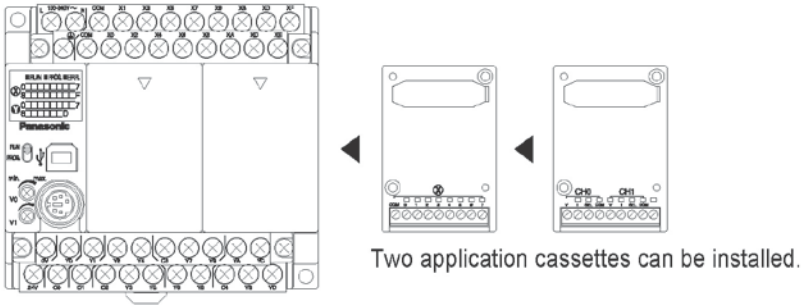

Two application cassettes can be installed.

C60 Control unit

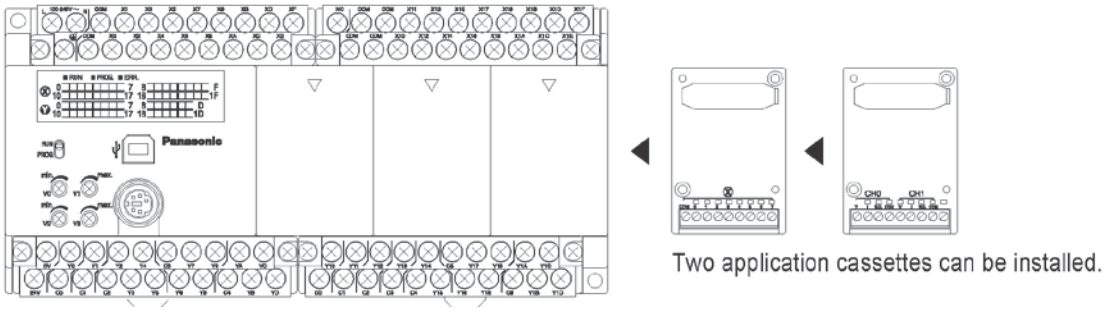

Two application cassettes can be installed.

Ramco National www.PanasonicSensors.com 1-800-280-6933

8.2 Application Cassettes

	Name	Specifications	I/O No.	Product No.
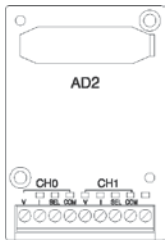	FP-X analog input cassette	2-channel analog input (non-isolated)	CH0 WX10 WX20 CH1 WX11 WX21	AFPX-AD2
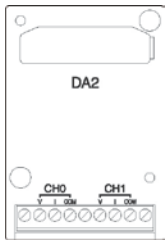	FP-X analog output cassette	2-channel analog output (isolated) (isolated between channels)	CH0 WY10 WY20 CH1 WY11 WY21	AFPX-DA2
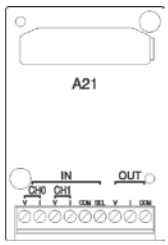	FP-X analog I/O cassette	2-channel analog input (isolated) (non-isolated between channels) 1-Channel analog output (isolated)	CH0 WX10 WX20 CH1 WX11 WX21 WY10 WY20	AFPX-A21
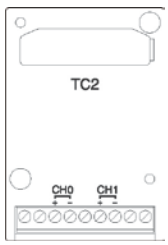	FP-X thermocouple cassette	2-channel thermocouple input (isolated) (isolated between channels)	CH0 WX10 WX20 CH1 WX11 WX21	AFPX-TC2
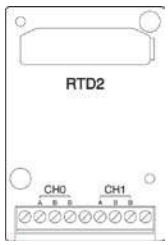	FP-X RTD cassette	2-channel RTD input (insulated) (insulated between channels)	CH0 WX10 WX20 CH1 WX11 WX21	AFPX-RTD2
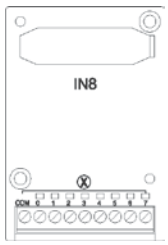	FP-X input cassette	8-point DC input	From X100 From X200	AFPX-IN8

Ramco National www.PanasonicSensors.com 1-800-280-6933

	Name	Specifications	I/O No.	Product No.
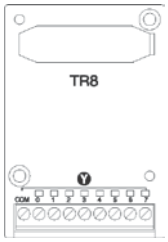	FP-X output cassette	8-point transistor output (NPN)	From Y100 From Y200	AFPX-TR8
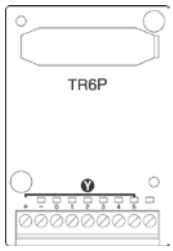	FP-X output cassette	6-point transistor output (PNP)	From Y100 From Y200	AFPX-TR6P
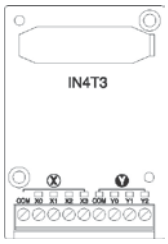	FP-X I/O cassette	4-point DC input 3-point transistor output (NPN)	From X100 From Y100 From X200 From Y200	AFPX-IN4T3
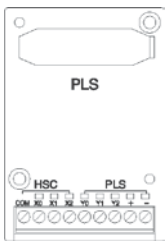	FP-X pulse I/O cassette Note2)	2-channel high-speed counter + 1-channel pulse output	From X100 From Y100 From X200 From Y200	AFPX-PLS
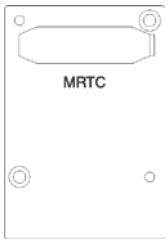	FP-X master memory cassette	Master memory + Clock/Calendar	–	AFPX-MRTC

Note1) The I/O numbers are the cassette mounting part 1 (from X100 and Y100) and cassette mounting part 2 (from X200 and Y200).

Reference: <4.5 I/O Allocation of FP-X Add-on Cassette>

Note2) The pulse I/O cassette cannot be used with the Tr type.

Ramco National www.PanasonicSensors.com 1-800-280-6933

8.3 Specifications

8.3.1 FP-X Analog Input Cassette

Product No.: AFPX-AD2

Item		Specifications
No. of input points		2 channels/cassette
Input range	Voltage	0 to 10 V
	Current	0 to 20 mA
Digital conversion value		K0 to K4000 Note)
Resolution		1/4000 (12 bits)
Conversion speed		1 ms/channel
Total accuracy		±1% F.S. or less (0 to 55 °C)
Input impedance	Voltage	40 kΩ
	Current	125 Ω
Absolute max. rating	Voltage	-0.3 to +15 V
	Current	-2 to +30 mA
Input protection		Diode
Insulation		Non-isolated between analog part and internal digital circuit part
Occupation No. of I/O contacts		Input 32 points

Note1) When the analog input values exceed the upper and lower limits, the digital values maintain the upper and lower limit values. As the resolution is 12 bits, the higher 4 bits of the input contact are always 0.

Note2) Following time is required to reflect the analog data in the input of the control unit.

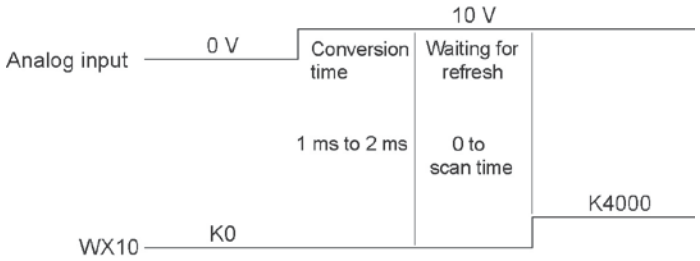

Note3) Averaging cannot be processed with the cassette. If averaging is necessary, use a ladder program to execute averaging process.

Terminal layout

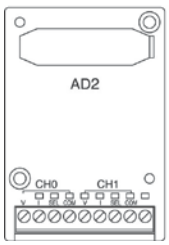

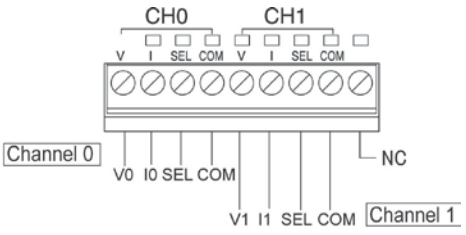

Note) There is no LED indication.

CH0	**V**	Voltage input
	I	Current input
	SEL	Voltage/current select
	COM	Common
CH1	**V**	Voltage input
	I	Current input
	SEL	Voltage/current select
	COM	Common
NC		Not used

Ramco National www.PanasonicSensors.com 1-800-280-6933

Connection method

With voltage input (0 to 10V)

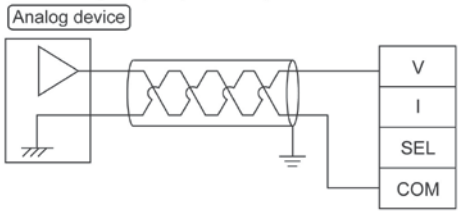

With current input (0 to 20 mA)

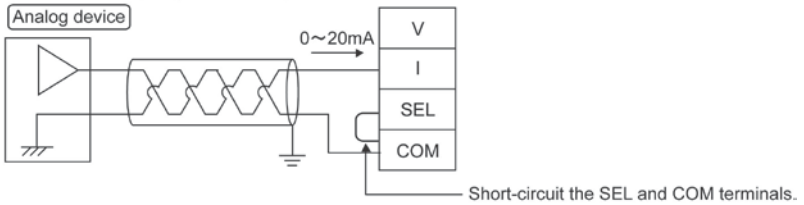

DC input: 0 mA to 20 mA

Conversion characteristics graph

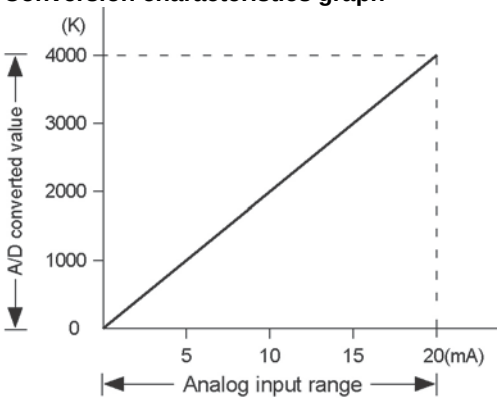

Table of A/D converted values

Input current (mA)	A/D converted value
0.0	0
2.5	500
5.0	1000
7.5	1500
10.0	2000
12.5	2500
15.0	3000
17.5	3500
20.0	4000

When exceeding the rated range

Input voltage (V)	Converted value
0 mA or less (Negative value)	0
20 mA or more	4000

Ramco National www.PanasonicSensors.com 1-800-280-6933

DC input: 0 V to 10 V
Conversion characteristics graph

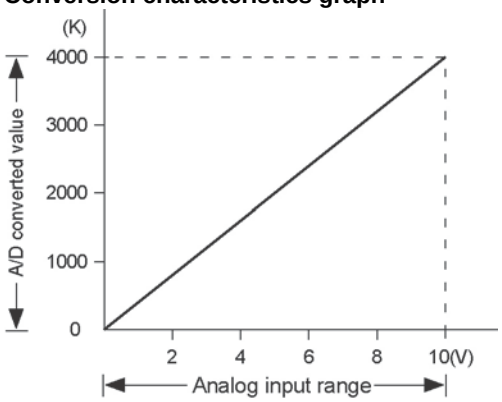

Table of A/D converted values

Input voltage (V)	A/D converted value
0.0	0
1.0	400
2.0	800
3.0	1200
4.0	1600
5.0	2000
6.0	2400
7.0	2800
8.0	3200
9.0	3600
10.0	4000

When exceeding the rated range

Input voltage (V)	Converted value
0 V or less (Negative value)	0
10 V or more	4000

Each channel data is allocated as I/O data as shown below.

Analog input cassette Input channel	Installed slot No.	
	Cassette mounting part 1 (Slot 0)	Cassette mounting part 2 (Slot 1)
CH0	WX10	WX20
CH1	WX11	WX21

Note:

- Use double-core twisted-pair shielded wires. It is recommended to ground them. However, depending on the conditions of the external noise, it may be better not to ground the shielding.
- Do not have the analog input wiring close to AC wires, power wires, or load.

Ramco National www.PanasonicSensors.com 1-800-280-6933

8.3.2 FP-X Analog Output Cassette

Product No.: AFPX-DA2

Item		Specifications
No. of output points		2 channels/cassette
Output range	Voltage	0 to 10 V
	Current	0 to 20 mA
Digital value		K0 to K4000 Note1)
Resolution		1/4000 (12 bits)
Conversion speed		1 ms/1 channel
Total accuracy		±1% F.S. or less (0 to 55 °C)
Output impedance		0.5 kΩ (Voltage output)
Output max. current		10 mA (Voltage output)
Output allowable load resistance		600 Ω or less (Current output)
Insulation		Between analog output terminal and internal digital circuit part Transformer insulation, Isolation IC insulation Between each channel of analog output terminals Transformer insulation , Isolation IC insulation

Note1) When the digital value exceeds the upper and lower limits, D/A conversion will not be performed.
Note2) Following time is required to reflect the output of the control unit in the analog output.

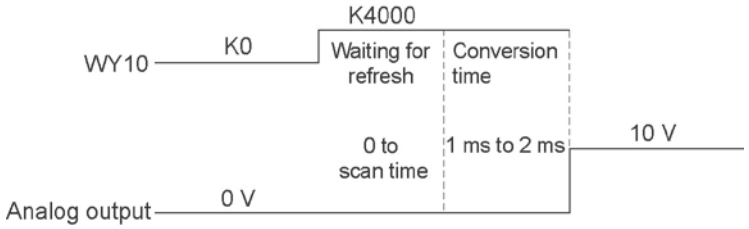

Terminal layout

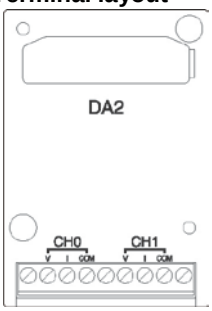

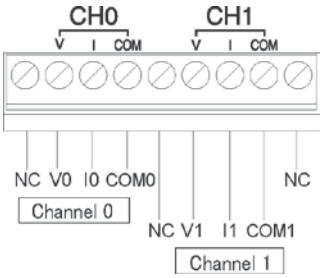

CH0	**V**	Voltage output
	I	Current output
	COM0	Common
CH1	**V**	Voltage output
	I	Current output
	COM1	Common
NC		Not used

Connection method

With voltage output (0 to 10V)

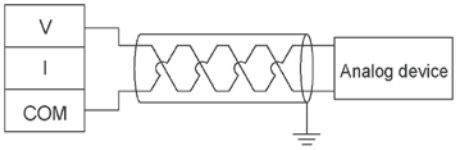

With current output (0 to 20 mA)

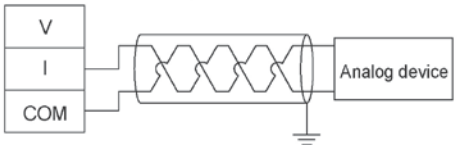

Ramco National www.PanasonicSensors.com 1-800-280-6933

0 mA to 20 mA output
Conversion characteristics graph

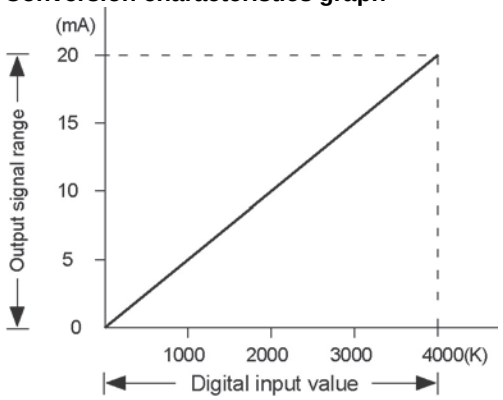

Table of D/A converted values

Digital input value	Output current (mA)
0	0.0
500	2.5
1000	5.0
1500	7.5
2000	10.0
2500	12.5
3000	15.0
3500	17.5
4000	20.0

When exceeding the rated range

Digital input value	Analog output value
Negative value	Unchanged (Value preceding the input of a negative value)
4001 or more	Unchanged (Value preceding the input of 4001)

0 V to 10 V output
Conversion characteristics graph

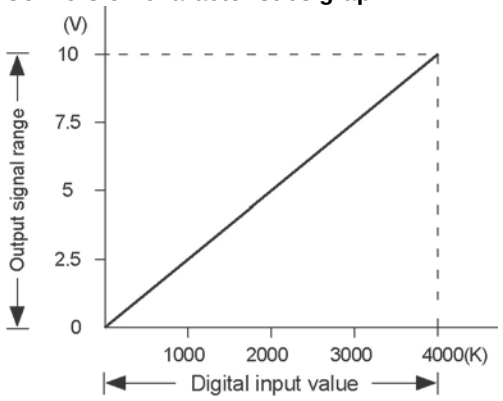

Ramco National www.PanasonicSensors.com 1-800-280-6933

Table of D/A converted values

Digital input value	Output voltage (V)
0	0.0
400	1.0
800	2.0
1200	3.0
1600	4.0
2000	5.0
2400	6.0
2800	7.0
3200	8.0
3600	9.0
4000	10.0

When exceeding the rated range

Digital input value	Analog output value
Negative value	Unchanged (Value preceding the input of a negative value)
4001 or more	Unchanged (Value preceding the input of 4001)

Each channel data is allocated as I/O data as shown below.

Analog output cassette Output channel	Installed slot No.	
	Cassette mounting part 1 (Slot 0)	Cassette mounting part 2 (Slot 1)
CH0	WY10	WY20
CH1	WY11	WY21

Note:

- Use double-core twisted-pair shielded wires. It is recommended to ground them. However, depending on the conditions of the external noise, it may be better not to ground the shielding.
- Do not have the analog output wiring close to AC wires, power wires, or load.

DA part Internal block diagram

A voltage amplifier and a current amplifier is connected in parallel to one DA converter IC.
Do not connect an analog device to the voltage output terminal and current output terminal of the same channel simultaneously.

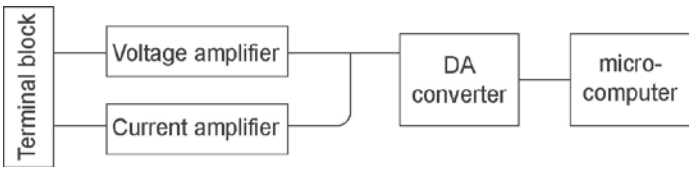

Ramco National www.PanasonicSensors.com 1-800-280-6933

8.3.3 FP-X Analog I/O Cassette

Product No.: AFPX-A21

Item		Specifications
No. of input points		2 channels/cassette
Input range	Voltage	0 to 10 V, 0 to 5 V
	Current	0 to 20 mA
Digital conversion value		K0 to K4000
Resolution		1/4000 (12 bits)
Conversion speed		1 ms/channel
Total accuracy		±1% F.S. or less (0 to 55 °C)
Input impedance	Voltage	1M Ω
	Current	250 Ω
Absolute max. input	Voltage	-0.5, +15 V (Voltage input)
	Current	+30 mA (Current input)
Insulation		Between analog output terminal and internal digital circuit part Transformer insulation, Isolation IC insulation Between each channel of analog output terminals Transformer insulation , Isolation IC insulation

Note1) When the analog input values exceed the upper and lower limits, the digital values maintain the upper and lower limit values. As the resolution is 12 bits, the higher 4 bits of the input contact are always 0.

Note2) Following time is required to reflect the analog data in the input of the control unit.

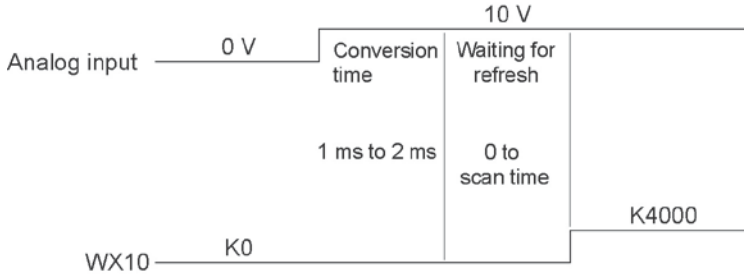

Note3) Averaging cannot be processed with the cassette. If averaging is necessary, use a ladder program to execute averaging process.

Item		Specifications
No. of output points		1 channels/cassette
Output range	Voltage	0 to 10 V
	Current	0 to 20 mA
Digital value		K0 to K4000 Note)
Resolution		1/4000 (12 bits)
Conversion speed		1 ms/1 channel
Total accuracy		±1% F.S. or less (0 to 55 °C)
Output impedance		0.5 kΩ (Voltage output)
Output max. current		10 mA (Voltage output)
Output allowable load resistance		600 Ω or less (Current output)
Insulation		Between analog output terminal and internal digital circuit part Transformer insulation, Isolation IC insulation Between analog output terminal and analog input terminal Transformer insulation , Isolation IC insulation

Ramco National www.PanasonicSensors.com 1-800-280-6933

Terminal layout

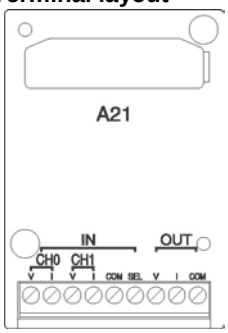

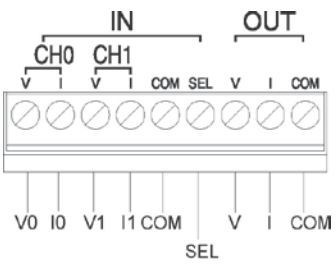

Input	**CH0**	**V**	Voltage input
		I	Current input
	CH1	**V**	Voltage input
		I	Current input
	COM		Common (for input)
	SEL Note)		Input range selection 0 to 10 V or 0 to 5 V, 0 to 20 mA
Output	**V**		Voltage output
	I		Current output
	COM		Common (for output)

Note) The CH0 and CH1 will be the same range according to switching of the SEL terminal. However, the inputs of 0 to 5 V and 0 to 20 mA can be used at the same time depending on the connection.

Connection method

With voltage input (0 to 10V)

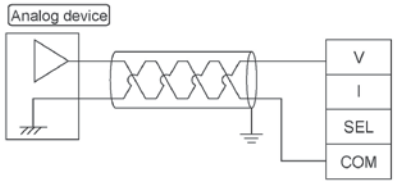

With voltage input (0 to 5V)

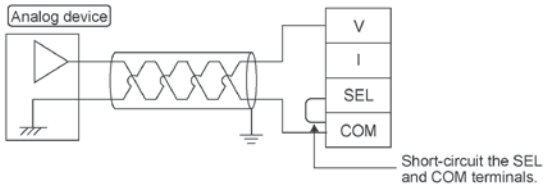

With current input (0 to 20 mA)

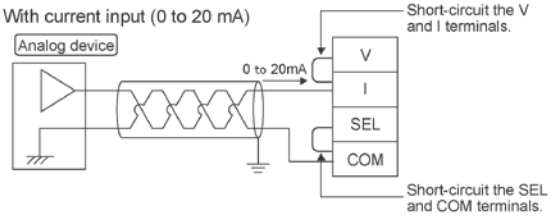

With voltage output (0 to 10V)

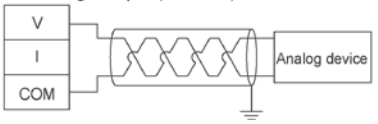

With current output (0 to 20 mA)

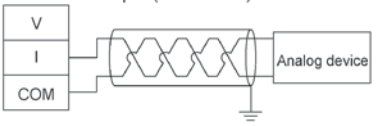

Ramco National www.PanasonicSensors.com 1-800-280-6933

DC input: 0 mA to 20 mA
Conversion characteristics graph

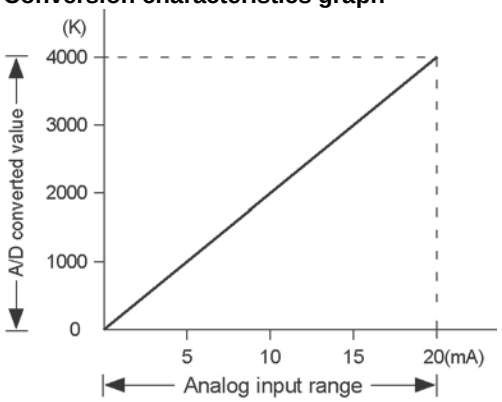

Table of A/D converted values

Input current (mA)	A/D converted value
0.0	0
2.5	500
5.0	1000
7.5	1500
10.0	2000
12.5	2500
15.0	3000
17.5	3500
20.0	4000

When exceeding the rated range

Input voltage (V)	Converted value
0 mA or less (Negative value)	0
20 mA or more	4000

DC input: 0 V to 10 V
Conversion characteristics graph

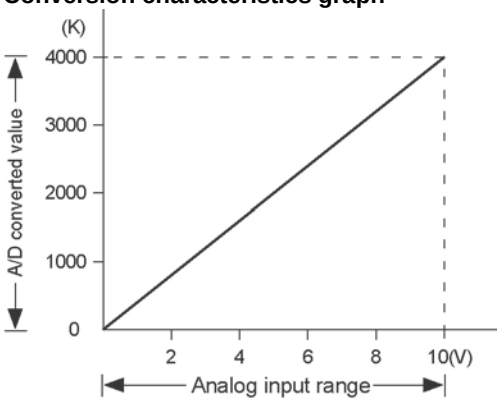

Table of A/D converted values

Input voltage (V)	A/D converted value
0.0	0
1.0	400
2.0	800
3.0	1200
4.0	1600
5.0	2000
6.0	2400
7.0	2800
8.0	3200
9.0	3600
10.0	4000

When exceeding the rated range

Input voltage (V)	Converted value
0 V or less (Negative value)	0
10 V or more	4000

Ramco National www.PanasonicSensors.com 1-800-280-6933

DC input: 0 V to 5 V
Conversion characteristics graph

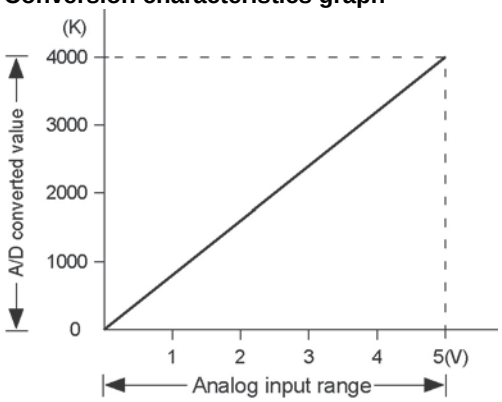

Table of A/D converted values

Input voltage (V)	A/D converted value
0.0	0
0.5	400
1.0	800
1.5	1200
2.0	1600
2.5	2000
3.0	2400
3.5	2800
4.0	3200
4.5	3600
5.0	4000

When exceeding the rated range

Input voltage (V)	Converted value
0 V or less (Negative value)	0
5 V or more	4000

Each channel data is allocated as I/O data as shown below.

Analog input cassette Input channel	Installed slot No.	
	Cassette mounting part 1 (Slot 0)	Cassette mounting part 2 (Slot 1)
CH0	WX10	WX20
CH1	WX11	WX21

Note:

- Use double-core twisted-pair shielded wires. It is recommended to ground them. However, depending on the conditions of the external noise, it may be better not to ground the shielding.
- Do not have the analog input wiring close to AC wires, power wires, or load.

Ramco National www.PanasonicSensors.com 1-800-280-6933

0 mA to 20 mA output

Conversion characteristics graph

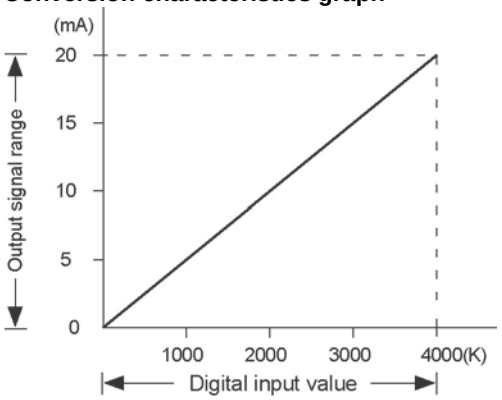

Table of D/A converted values

Digital input value	Output current (mA)
0	0.0
500	2.5
1000	5.0
1500	7.5
2000	10.0
2500	12.5
3000	15.0
3500	17.5
4000	20.0

When exceeding the rated range

Digital input value	Analog output value
Negative value	Unchanged (Value preceding the input of a negative value)
4001 or more	Unchanged (Value preceding the input of 4001)

Ramco National www.PanasonicSensors.com 1-800-280-6933

0 V to 10 V output

Conversion characteristics graph

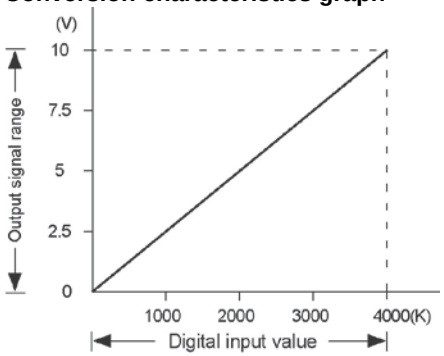

Table of D/A converted values

Digital input value	Output voltage (V)
0	0.0
400	1.0
800	2.0
1200	3.0
1600	4.0
2000	5.0
2400	6.0
2800	7.0
3200	8.0
3600	9.0
4000	10.0

When exceeding the rated range

Digital input value	Analog output value
Negative value	Unchanged (Value preceding the input of a negative value)
4001 or more	Unchanged (Value preceding the input of 4001)

Each channel data is allocated as I/O data as shown below.

Analog output cassette Output channel	Installed slot No.	
	Cassette mounting part 1 (Slot 0)	Cassette mounting part 2 (Slot 1)
CH0	WY10	WY20

Note:

- Use double-core twisted-pair shielded wires. It is recommended to ground them. However, depending on the conditions of the external noise, it may be better not to ground the shielding.
- Do not have the analog output wiring close to AC wires, power wires, or load.

DA part Internal block diagram

A voltage amplifier and a current amplifier is connected in parallel to one DA converter IC.
Do not connect an analog device to the voltage output terminal and current output terminal of the same channel simultaneously.

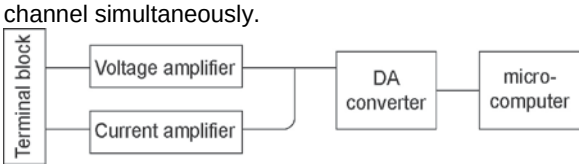

Ramco National www.PanasonicSensors.com 1-800-280-6933

8.3.4 FP-X Thermocouple Cassette

Product No.: AFPX-TC2

Item	Specifications
No. of input points	2 channels/cassette
Input range	Thermocouple type K (-50.0 to 500.0 °C) Thermocouple type J (-50.0 to 500.0 °C)
Digital value	In normal condition: K-500 to K5000 When exceeding rated range: K-501, K5001 or K8000 When wire is broken: K8000 When data is getting ready: K8001
Resolution	0.2 °C (The indication is 0.1 °C by the software averaging procedure.)
Sampling cycle	200 ms/ 2 channels
Total accuracy	0.5% F.S. or less + Cold junction error 1.5 °C
Input impedance	344 kΩ
Insulation	Transformer insulation, isolation IC insulation

Note1) When the wire of thermocouple is broken, the digital value will change to K8000 within 70 seconds. Practice in the ladder program a process for avoiding a risk, would be resulting from a broken wire, and exchange the thermocouple.

Note2) From the Power-on to the converted data Ready, the digital value will be K8001. Create a ladder program not to use the data obtained during that period.

Terminal layout

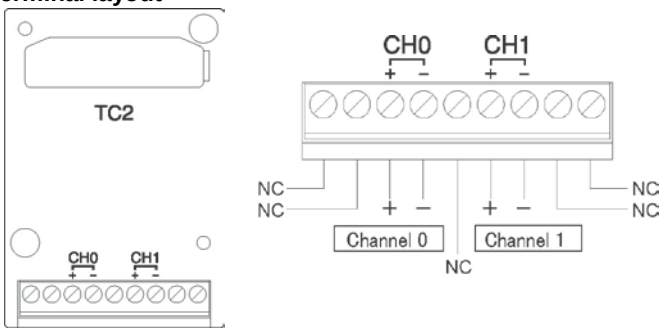

CH0	**+**	Thermocouple input +
	-	Thermocouple input -
CH1	**+**	Thermocouple input +
	-	Thermocouple input -
NC		Used by the system. Do not connect anything.

Connection method

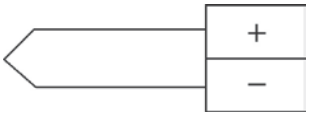

Keep the space more than 100 mm between the input line and the power line/high-voltage line.
It is recommended to ground the unit using the shielded compensating wire.

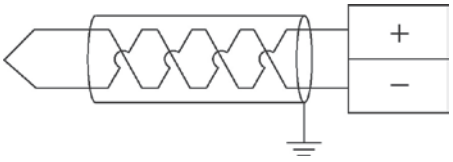

Ramco National www.PanasonicSensors.com 1-800-280-6933

Range setting switch

Select the thermocouple type K or J with the switch at the back. (The CH0 and CH1 will be the same range.)

Switch (backside)

	Thermocouple type K
	Thermocouple type J

K and J range

Conversion characteristics graph

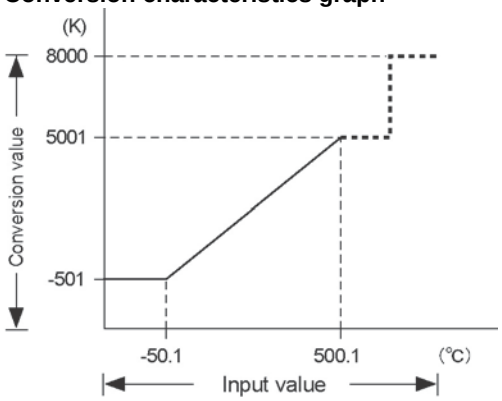

When exceeding the rated range

Input value	Converted value
-50.1 °C or less	K –501
500.1 °C or more	K 5001 or K 8000
When wire is broken	K 8000

8.3.5 FP-X RTD (Resistance Temperature Detector) Cassette

Product No.: AFPX-RTD2

Item	Specifications
No. of input points	2 channels/cassette
Input range	RTD Pt100 Note1) (-200.0 to +850.0 °C)
Digital conversion value	In normal condition : K-2000 to K8500 When exceeding rated range : K-2150 to K-2001, K8501 to K8650 Note2) When wire is broken : K20000 When data is getting ready : K20001 Note3) Note4)
Resolution	0.1 °C (Minimum unit)
Conversion speed	200 ms or less Note5)
Total accuracy	±0.2% F.S. or less (Ambient temperature: 0 to +55°C) Note6)
Allowable input wire resistance	Resistance value per wire: 10 Ω or less
Insulation	Between analog input circuit and internal circuit: Transformer insulation, photo coupler insulation Between analog input channels: Transformer insulation
Occupation No. of I/O contacts	Input 32 points Note7)

Note1) Use a 3-wire type RTD.

Note2) When exceeding the rated range, reference values which are not in the range of the conversion accuracy assurance are indicated up to ±15 °C. However, if the temperature drops (below -230 °C) or rise (over 900 °C) more, the data will be the same value (K20000) as the one at the time of disconnection.

Note3) The digital value will be K20001 from the Power-on to the converted data Ready (approx. 3 seconds) or when an error occurs (watchdog timer time-out error) on the microcomputer for the RTD cassette. Take care of the use of the data during this period not to influence other programs.

Note4) From the disconnection to the recovery and converted data Ready (approx. 3 seconds), the digital value will be K20001. Take care of the use of the data during this period not to influence other programs.

Note5) The conversion speed is 200 ms or less regardless of the number of channels to be used. And it will be reflected in the internal data register after the completion of a scan.

Note6) The full scale (F.S.) is -200 to 850 °C for the accuracy range of RTD Pt100.

Note7) Each channel data is allocated as I/O data as the table below.

RTD cassette Input channel	Installed slot	
	Expansion slot 0 (Cassette position)	Expansion slot 1 (Cassette position)
Channel 0 (CH0)	WX10	WX20
Channel 1 (CH1)	WX11	WX21

Note8) Supply power for 15 minutes or more after the power-on for performing the accurate measurement before using the cassette.

Terminal layout

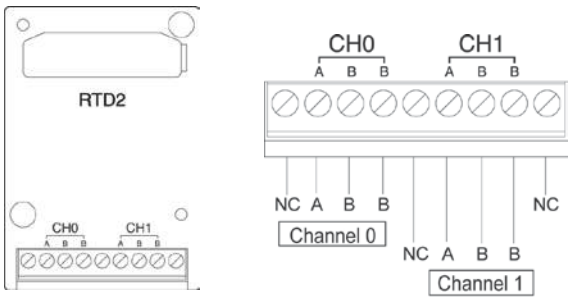

CH0	**A**	RTD input A
	B	RTD input B
	B	RTD input B
CH1	**A**	RTD input A
	B	RTD input B
	B	RTD input B
NC		Do not connect anything.

Ramco National www.PanasonicSensors.com 1-800-280-6933

Connection method

Connect each channel as mentioned below. After the connection, confirm that the polarity and terminal positions are correctly connected.

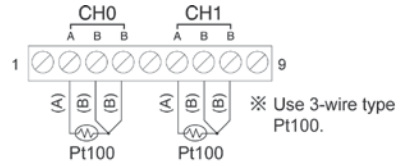

Note1) When extending the lead wire of RTD, use 3 wires in the same resistance and the same length.

Note2) Do not place the input signal line close to an AC power line or high-voltage line. Also, do not bundle it with them.

Note3) Use shielded wires for the input signal line. It is recommended to ground them. However, depending on the conditions of the external noise, it may be better not to ground the shielding.

Noter4) Do not connect one RTD to other equipment in parallel (input).

RTD input range

Conversion characteristics graph

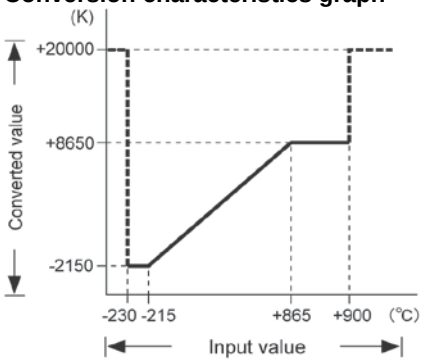

Table of converted values

Input value (°C)	Converted value
-200	-2000
0	0
850	8500

When exceeding the rated range

(Reference values which accuracy is not assured are indicated up to ±15 °C.)

Input value	Converted value
-215 °C or less	-2150
865 °C or more	8650
Disconnection	20000

Note) When exceeding the maximum/minimum value (exceeding the rated range), the converted values will be the values as mentioned above. However, if the temperature drops (below -230 °C) or rise (over 900 °C) more, the data will be the same value (+20000) as the one at the time of disconnection.

Note:

About RTD input range

- From the Power-on to the converted data Ready (approx. 3 seconds), the digital value will be K20001. Take care of the use of the data during this period not to influence other programs.
- From the disconnection or exceeding the rated range (digital value: K20000) to the recovery and converted data Ready (approx. 3 seconds), the digital value will be K20001. Take care of the use of the data during this period not to influence other programs.

Ramco National www.PanasonicSensors.com 1-800-280-6933

8.3.6 FP-X Input Cassette

Product No.: AFPX-IN8

Item		Description
Insulation method		Optical coupler
Rated input voltage		24 V DC
Operating voltage range		21.6 to 26.4 V DC
Rated input current		Approx. 3.5 mA
Input points per common		8 points/common (Either the positive or negative of input power supply can be connected to common terminal.)
Min. on voltage/Min. on current		19.2 V DC/3 mA
Max. off voltage/Max. off current		2.4 V DC/1 mA
Input impedance		Approx. 6.8 kΩ
Response time	off→on	1.0 ms or less
	on→off	1.0 ms or less
Operating mode indicator		LED display
EN61131-2 Applicable type		TYPE3 (however, according to the above specifications)

LED indication/Terminal layout

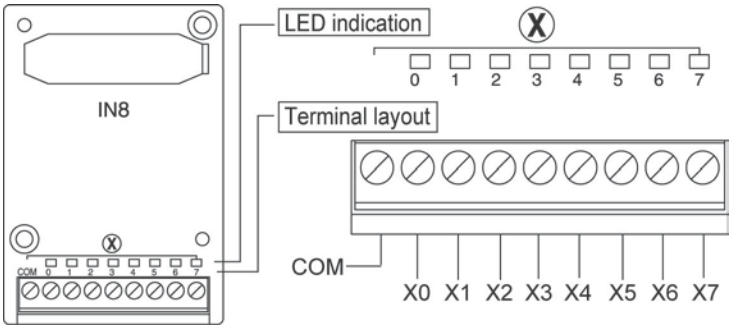

Circuit diagram

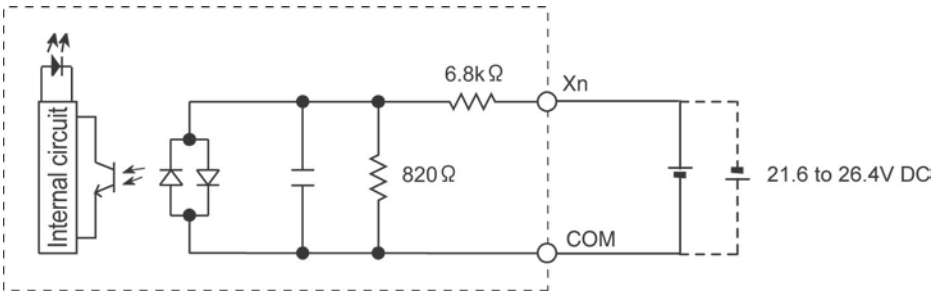

Ramco National www.PanasonicSensors.com 1-800-280-6933

8.3.7 FP-X Output Cassette

Product No.: AFPX-TR8

Item		Description
Insulation method		Optical coupler
Output type		Open collector (NPN)
Rated load voltage		24 V DC
Operating load voltage range		21.6 to 26.4 V DC
Max. load current		0.3 A
Max. inrush current		1.5 A
Output points per common		8 points/common
Off state leakage current		1μ A or less
On state voltage drop		1.5 V DC or less
Response time	off→on	0.1 ms or less
	on→off	0.8 ms or less
Surge absorber		Zener diode
Operating mode indicator		LED display

LED indication/Terminal layout

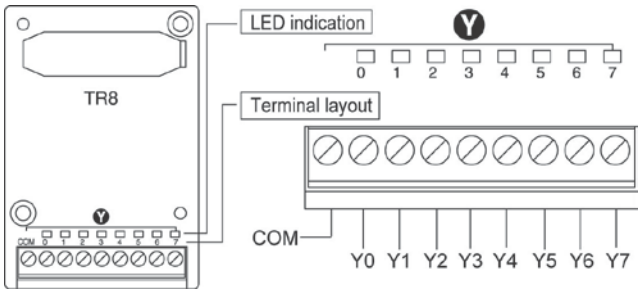

Limitations on number of simultaneous on points

Keep the number of points which are simultaneously on within the following range as determined by the ambient temperature.

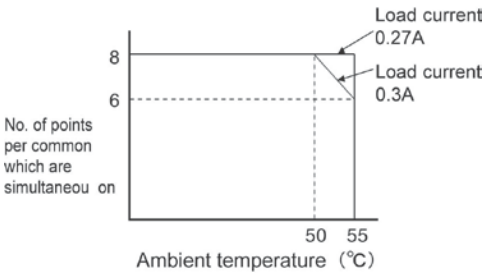

Circuit diagram

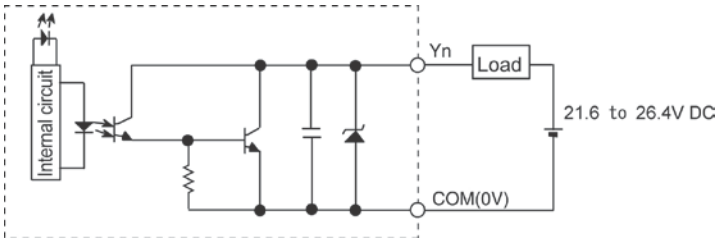

Ramco National www.PanasonicSensors.com 1-800-280-6933

Product No.: AFPX-TR6P

Item		Description
Insulation method		Optical coupler
Output type		Open collector (PNP)
Rated load voltage		24 V DC
Operating load voltage range		21.6 to 26.4 V DC
Max. load current		0.5 A
Max. surge current		1.5 A
Output points per common		6 points/common
Off state leakage current		1μ A or less
On state voltage drop		1.5 V DC or less
Response time	off→on	0.1 ms or less
	on→off	0.8 ms or less
Surge absorber		Zener diode
Operating mode indicator		LED display

LED indication/Terminal layout

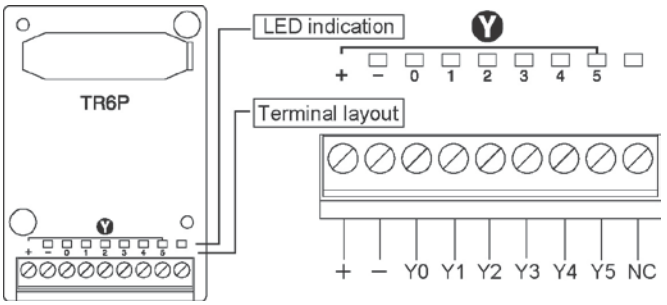

Limitations on number of simultaneous on points

Keep the number of points which are simultaneously on within the following range as determined by the ambient temperature.

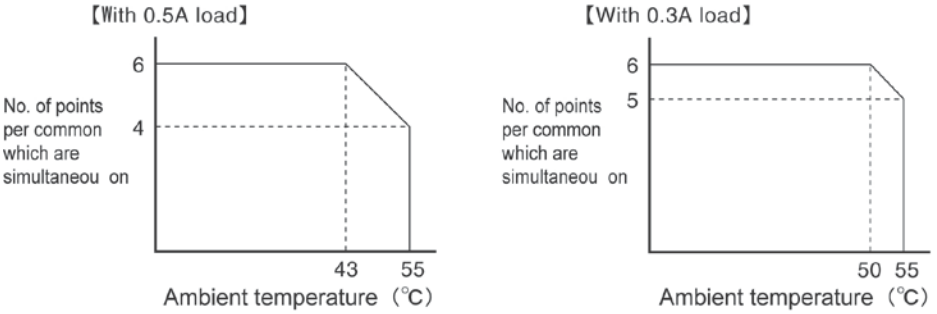

Circuit diagram

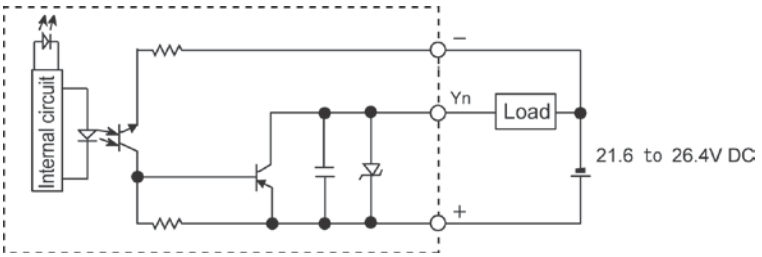

Ramco National www.PanasonicSensors.com 1-800-280-6933

8.3.8 FP-X I/O Cassette

Product No.: AFPX-IN4T3

Input specifications

Item	Description
Rated input voltage	24 V DC
Operating voltage range	21.6 to 26.4 V DC
Rated input current	Approx. 3.5 mA
Input points per common	4 points/common
Min. on voltage/Min. on current	19.2 V DC/3 mA
Max. off voltage/Max. off current	2.4 V DC/1 mA
Input impedance	Approx. 6.8 kΩ
Response time	1 ms or less
Operating mode indicator	LED display

Output specifications

Item		Description
Output type		Open collector (NPN)
Rated load voltage		24 V DC
Max. load current		0.3 A
Output points per common		3 points/common
Response time	off→on	0.1 ms or less
	on→off	0.8 ms or less
Operating mode indicator		LED display

LED indication/Terminal layout

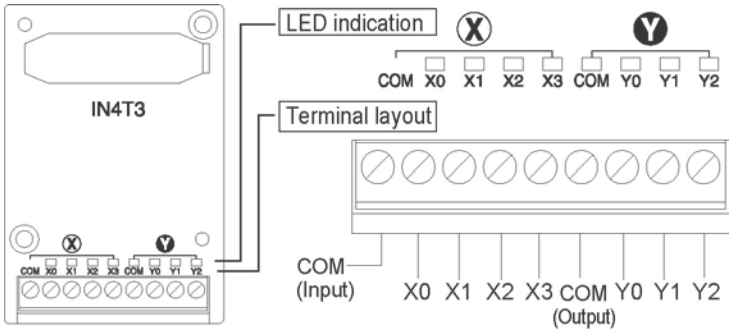

Circuit diagram

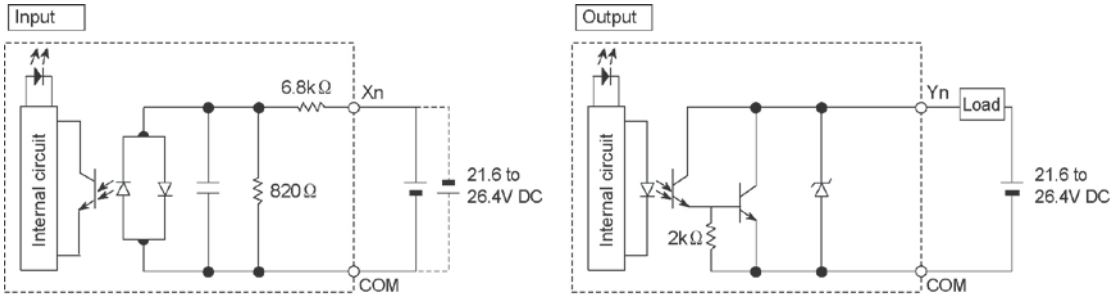

Ramco National www.PanasonicSensors.com 1-800-280-6933

8.3.9 FP-X Pulse I/O Cassette

Product No.: AFPX-PLS

Note:

The pulse I/O cassette cannot be used with the FP-X Control Unit Tr type.

High-speed counter part

Item			Specifications
Insulation method			Optical coupler
No. of input points	For high-speed counter		Single-phase 2 channels, 2-phase 1 channel
	For Pulse catch		3 points
	For interrupt input		3 points
	For normal input		3 points
Rated input voltage			24 V DC
Operating voltage range			21.6 to 26.4 V DC
Rated input current			Approx. 8 mA
Input points per common			3 points/common
Min. on voltage/Min. on current			19.2 V DC/6 mA
Max. off voltage/Max. off current			2.4 V DC/1.3 mA
Input impedance			Approx. 3 kΩ
Response time		off→on	5 μs or less Note)
		on→off	5 μs or less Note)
Operating mode indicator			LED display
EN61131-2 Applicable type			TYPE3 (however, according to the above specifications)

Note) This is the specification when the rated input voltage is 24 V DC at 25 °C.
As the input of the pulse I/O cassette is for the counter input, the response time is quick. Therefore, if it is used as a normal input, it is recommended to add a timer by a ladder program to prevent chattering or noises to be received as input signals.

Pulse output part

Item			Description
Insulation method			Optical coupler
No. of output points	For pulse output		1 ch
	For PWM output		1 ch
	For normal input		3 points
Output type			Open collector (NPN)
Rated load voltage			5 to 24 V DC
Operating load voltage range			4.75 to 26.4 V DC
Max. load current			0.3 A
Max. surge current			1.5 A
Output points per common			3 points/common
Off state leakage current			1μ A or less
On state voltage drop			0.2 V DC or less
Response time	Y0 Y1	off→on	2 μs or less (when the load current is 15 mA or more.)
		on→off	5 μs or less (when the load current is 15 mA or more.)
	Y2	off→on	1 ms or less
		on→off	1 ms or less
External power supply (+, - terminals)			21.6 to 26.4 V DC
Surge absorber			Zener diode
Operating mode indicator			LED display

Ramco National www.PanasonicSensors.com 1-800-280-6933

LED indication/Terminal layout

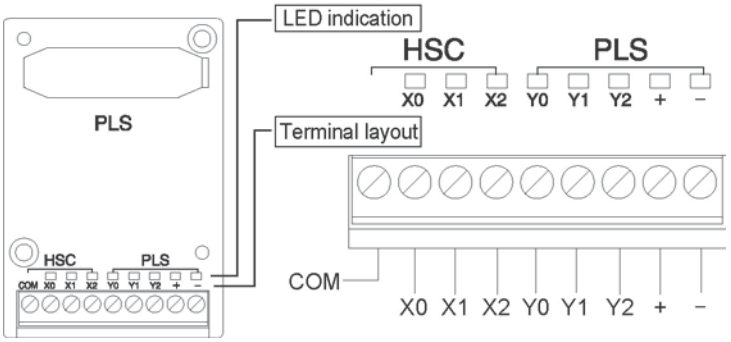

Circuit diagram

High-speed counter part

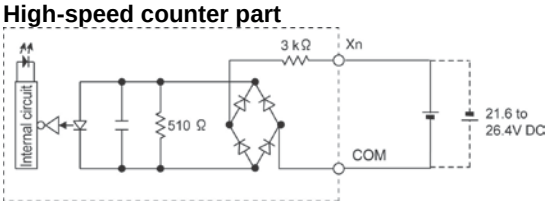

Pulse output part

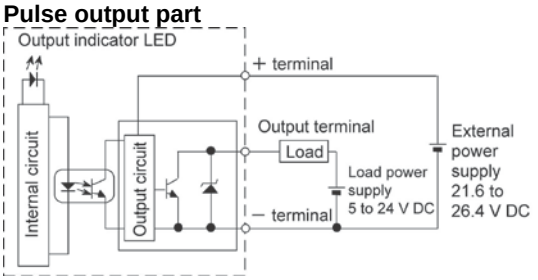

Ramco National www.PanasonicSensors.com 1-800-280-6933

8.3.10 FP-X Master Memory Cassette

Product No.: AFPX-MRTC

Item		Specifications
Clock/Calendar	Setting items	Year, month, day hour (24-hour display), minute, second and day of week
	Accuracy	At 0 °C: less than 104 seconds per month At 25 °C: less than 51 seconds per month At 55 °C: less than 155 seconds per month
Master memory function	Memory capacity	Flash ROM (512 kB)
	Storable data	System registers
		Ladder programs
		Comment data (328 kB)
		F-ROM data area
		Security function

Note: Only the Clock/Calendar function is valid at the factory setting. Install a battery in the control unit to use the Clock/Calendar function.
If the battery is not installed, the Clock/Calendar does not function.

Function changeover switch (between the Clock/Calendar and the master memory)

Use the switch at the back of the cassette to switch between the Clock/Calendar and master memory functions.

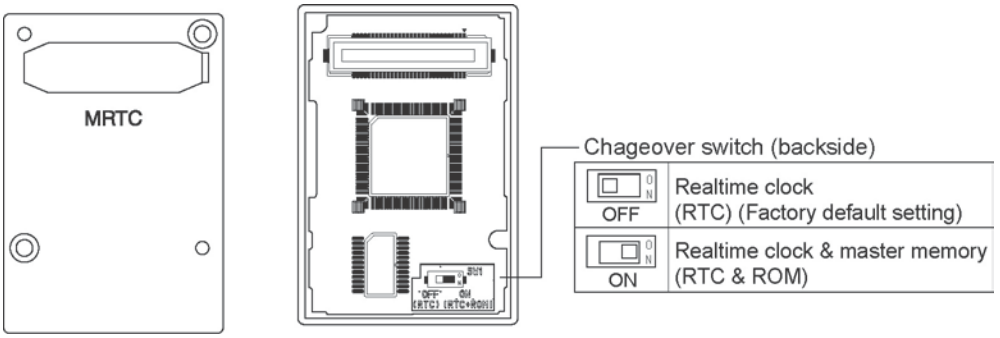

Ramco National www.PanasonicSensors.com 1-800-280-6933

Chapter 9

High-speed Counter, Pulse Output and PWM Output Functions (For Tr Type)

9.1 Overview of Each Functions

9.1.1 Usable Units and Cassettes

1. The pulse input can be counted using the inputs X0 to X7 of the main unit (Single-phase 8 channels, 2-phase 4 channels)
2. The pulse output can be carried out using the output of the main unit.
   C14 Tr type: 3 ch
   C30, C60 Tr type: 4 ch
   (0 ch, 1ch: High-speed pulse 2 ch, 3ch: Medium-speed pulse)
3. The pulse I/O cassette (AFPX-PLS) cannot be used with the FP-X Tr type control unit.

Restrictions on the pulse I/O functions of each control unit

		C14 Tr type	C30 Tr type	C60 Tr type
Input of main unit X0 to X7		A	A	A
Output of main unit Y0 to Y7		A (Y0 to Y5)	A	A
Input and output of Pulse I/O cassette (AFPX-PLS)	Cassette mounting part 1	N/A	N/A	N/A
	Cassette mounting part 2	N/A	N/A	N/A

A: Available, N/A: Not available

9.1.2 Three Pulse I/O Functions

There are three pulse I/O functions built into the FP-X Tr type

High-speed counter function (Control unit)

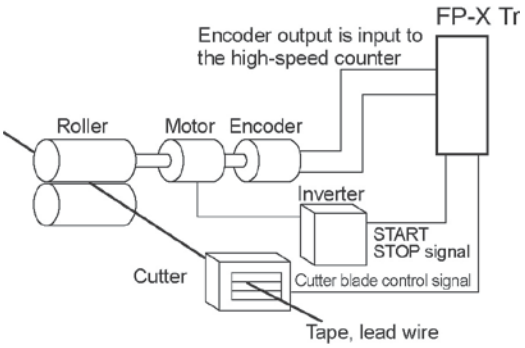

The high-speed counter function counts external inputs such as those from sensors or encoders. When the count reaches the target value, this function turns on/off the desired output.

Pulse output function (Control unit)

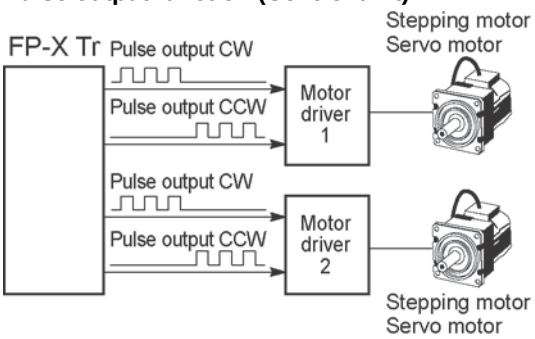

Combined with a commercially available motor driver, the function enables positioning control. With the exclusive instruction, you can perform trapezoidal control, home return, and JOG operation.

Ramco National www.PanasonicSensors.com 1-800-280-6933

PWM output function (Control unit)

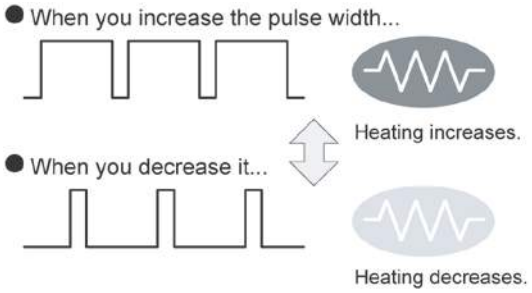

By using the exclusive instruction, the PWM output function enables a pulse output of the desired duty ratio.

Note) The pulse I/O cassette (AFPX-PLS) cannot be used with the FP-X Tr type control unit.

9.1.3 Performance of Pulse I/O Function

Number of Channel

I/O to be used	High-speed counter	Pulse output
Built in Control unit	Single-phase 8 channels or 2-phase 4 channels	C14 Tr type: 3 ch C30, C60 Tr type: 4 ch

Note) The pulse I/O cassette (AFPX-PLS) cannot be used with the FP-X Tr type control unit.

Counting range

- K-2, 147, 483, 648 to K+2, 147, 483, 647 (Coded 32-bit binary)
- The built-in high-speed counter is a ring counter. Consequently, if the counted value exceeds the maximum value, it returns to the minimum value. Similarly, if the counted value drops below the minimum value, it goes back to the maximum value and continues counting from there.

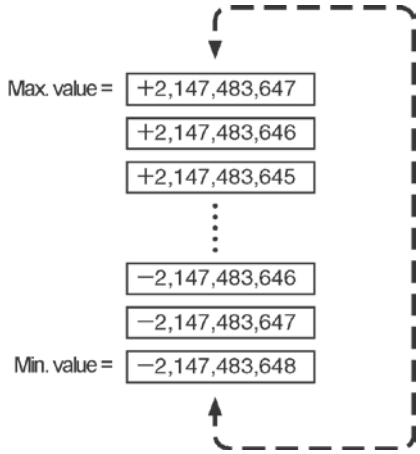

Note:

When the linear interpolation instruction F175 is used, the value for the amount of travel should be set so that it is within the range indicated below.

-8,388,608 to +8,388,607 (Coded 24-bit binary)

Ramco National www.PanasonicSensors.com 1-800-280-6933

9.2 Function Specifications and Restricted Items

9.2.1 Specifications

High-speed counter function

High-speed counter by the input of the main unit

Channel No.			Input contact	Reset input	Memory area being used			Performance specifications	
					Control flag	Elapsed value area	Target value area	Min. input pulse width	Max. counting speed Note1)
[Single phase] Incremental, Decremental	High-speed	CH0	X0	X6	R9110	DT90300 DT90301	DT90302 DT90303	High-speed input 5 μs	1 CH: 100 kHz 2 CH: 80 kHz 3 CH: 60 kHz 4 CH: 50 kHz
		CH1	X1	None	R9111	DT90304 DT90305	DT90306 DT90307		
		CH2	X2	X7	R9112	DT90308 DT90309	DT90310 DT90311		
		CH3	X3	None	R9113	DT90312 DT90313	DT90314 DT90315		
	Medium-speed	CH4	X4	None	R9114	DT90316 DT90317	DT90318 DT90319	Medium-speed input 100 μs	10 kHz each
		CH5	X5	None	R9115	DT90320 DT90321	DT90322 DT90323		
		CH6	X6	None	R9116	DT90324 DT90325	DT90326 DT90327		
		CH7	X7	None	R9117	DT90328 DT90329	DT90330 DT90331		
[2-phase] 2-phase input , One input, Direction distinction	High-speed	CH0	X0 X1	X6	R9110	DT90300 DT90301	DT90302 DT90303	High-speed input 14.3 μs	1 CH: 35 kHz 2 CH: 25 kHz
		CH2	X2 X3	X7	R9112	DT90308 DT90309	DT90310 DT90311		
	Medium-speed	CH4	X4 X5	None	R9114	DT90316 DT90317	DT90318 DT90319	Medium-speed input 100 μs	5 kHz each
		CH6	X6 X7	None	R9116	DT90324 DT90325	DT90326 DT90327		

Related instructions:

F0(MV) :High-speed counter control

F1(DMV) :Read/write of elapsed value of high-speed counter

F166(HC1S) :Target value match on

F167(CH1R) :Target value match off

Note1) These values are available only when the conditions of each item (such as counting method or No. of channels) are executed.
These values are not available if executing the HSC match ON/OFF instruction, other pulse I/O process simultaneously or executing the interrupt program.

Ramco National www.PanasonicSensors.com 1-800-280-6933

Pulse output function

Pulse output when using CPU output

Channel No.			Input/output contact number used					Memory area used			Max. output frequency Note2)
			CW or pulse output	CW or Sign output	Deviation counter clear output	Home input	Near home input	Control flag	Elapsed value area	Target value area	
Independence	High-speed	CH0	Y0	Y1	Y4 or Y8 Note1)	X4	DT90052 <bit4>	R911C	DT90348 DT90349	DT90350 DT90351	1CH: 100kHz 2CH: 100kHz
		CH1	Y2	Y3	Y5 or Y9 Note1)	X5		R911D	DT90352 DT90353	DT90354 DT90355	
	Medium-speed	CH2	Y4	Y5	None	X6		R911E	DT90356 DT90357	DT90358 DT90359	1CH: 20kHz 2CH: 20kHz
		CH3	Y6	Y7	None	X7		R911F	DT90360 DT90361	DT90362 DT90363	
Linear interpolation	High-speed CH0	X axis	Y0	Y1	Y4 or Y8 Note1)	X4		R911C	DT90348 DT90349	DT90350 DT90351	Composite speed 100kHz
		Y axis	Y2	Y3	Y5 or Y9 Note1)	X5		R911D	DT90352 DT90353	DT90354 DT90355	
	Medium-speed CH2	X axis	Y4	Y5	None	X6		R911E	DT90356 DT90357	DT90358 DT90359	Composite speed 20kHz
		Y axis	Y6	Y7	None	X7		R911F	DT90360 DT90361	DT90362 DT90363	

Related instructions

F0 (MV) :high-speed counter control
F1 (DMV) :Read/write of elapsed value of high-speed counter
F171 (SPDH) :trapezoidal control/home return
F172 (PLSH) :JOG operation
F174 (SP0H) :Data table control
F175 (SPSH) :Linear interpolation control

Note1) For C14, Y4 or Y5. For C30/C60, Y8 or Y9.

Note2) These values are available only when the conditions of each item (such as output method or No. of channels) are executed.
These values are not available if executing the HSC match ON/OFF instruction, other pulse I/O process simultaneously or executing the interrupt program.

PWM output function

PWM output when using CPU output

High-speed counter channel No.	Output contact No. used	Memory area used	Output frequency (duty)	Related instructions
		Control flag		
CH0	Y0	R911C	-When resolution = 1000, 1.5 Hz to 12.5 kHz (0.0 to 99.9%) -When resolution = 100, 15.6 kHz to 41.7 kHz (0 to 99%)	F0(MV) (High-speed counter control) F1(DMV) (Read/write of elapsed value of high-speed counter) F173(PWMH) (PWM output)
CH1	Y2	R911D		
CH2	Y4	R911E	-When resolution = 1000, 1.5 Hz to 12.5 kHz (0.0 to 99.9%) -When resolution = 100, 15.6 kHz only (0 to 99%)	F0(MV) (High-speed counter control) F1(DMV) (Read/write of elapsed value of high-speed counter) F173(PWMH) (PWM output)
CH3	Y6	R911F		

Ramco National www.PanasonicSensors.com 1-800-280-6933

9.2.2 Functions Used and Restrictions

Simplified chart - Maximum counting speed of High-speed counter

The maximum counting speed of the high-speed counter varies according to No. of channels to be used or the simultaneous use of the pulse output function. Use the chart below as a guide.

Combination of high-speed counter												Max. counting speed (Frequency kHz)			
												Combination with pulse output function			
												No pulse output			
Single-phase high-speed channels				Single-phase medium-speed channels				2-phase high-speed		2-phase medium-speed		Single-phase high-speed	Single-phase medium-speed	2-phase high-speed	2-phase medium-speed
CH0	CH1	CH2	CH3	CH4	CH5	CH6	CH7	CH0	CH2	CH4	CH6				
A												100			
A	A											80			
A	A	A										60			
A	A	A	A									50			
				A									10		
				A	A								10		
				A	A	A							10		
				A	A	A	A						10		
A				A								100	10		
A				A	A							100	10		
A				A	A	A						100	10		
A				A	A	A	A					100	10		
A	A			A								75	10		
A	A			A	A							75	10		
A	A			A	A	A						75	10		
A	A			A	A	A	A					75	10		
A	A	A		A								60	10		
A	A	A		A	A							60	10		
A	A	A		A	A	A						60	10		
A	A	A		A	A	A	A					60	10		
A	A	A	A	A								50	10		
A	A	A	A	A	A							50	10		
A	A	A	A	A	A	A						50	10		
A	A	A	A	A	A	A	A					50	10		
								A						35	
								A	A					25	
										A					5
										A	A				5
								A		A				30	5
								A		A	A			30	5
								A	A	A				20	5
								A	A	A	A			20	5
				A	A	A	A	A					10	35	
				A	A	A	A	A	A				10	25	
A										A		100			5
A	A									A		75			5
A	A	A								A		60			5
A	A	A	A							A		50			5
A										A	A	100			5
A	A									A	A	75			5
A	A	A								A	A	60			5
A	A	A	A							A	A	50			5

Note) The maximum counting speed may be lower than the above-mentioned values when the HSC target value match ON/OFF instruction and other interrupt programs are executed simultaneously.

Ramco National www.PanasonicSensors.com 1-800-280-6933

Max. counting speed (Frequency kHz)															
Combination with pulse output function															
Pulse output 1 CH				Pulse output 2 CH (1-axis interpolation)				Pulse output 3 CH				Pulse output 4 CH (2-axis interpolation)			
Single-phase high-speed	Single-phase medium-speed	2-phase high-speed	2-phase medium-speed	Single-phase high-speed	Single-phase medium-speed	2-phase high-speed	2-phase medium-speed	Single-phase high-speed	Single-phase medium-speed	2-phase high-speed	2-phase medium-speed	Single-phase high-speed	Single-phase medium-speed	2-phase high-speed	2-phase medium-speed
65				45				40				35			
55				40				35				30			
45				35				30				25			
40				30				25				25			
	10				10				10				10		
	10				10				10				10		
	10				10				10				10		
	10				10				10				10		
65	10			45	10			45	10			35	10		
65	10			45	10			45	10			35	10		
65	10			45	10			45	10			35	10		
65	10			45	10			45	10			35	10		
55	10			40	10			35	10			30	10		
55	10			40	10			35	10			30	10		
55	10			40	10			35	10			30	10		
55	10			40	10			35	10			30	10		
45	10			35	10			30	10			25	10		
45	10			35	10			30	10			25	10		
45	10			35	10			30	10			25	10		
45	10			35	10			30	10			25	10		
40	10			30	10			25	10			25	10		
40	10			30	10			25	10			25	10		
40	10			30	10			25	10			25	10		
40	10			30	10			25	10			25	10		
		25				20				15				15	
		20				15				15				14	
			5				5				5				5
			5				5				5				5
		25	5			20	5			15	5			15	5
		25	5			20	5			15	5			15	5
		15	5			15	5			15	5			10	5
		15	5			15	5			15	5			10	5
	10	25			10	20			10	15			10	15	
	10	20			10	15			10	15			10	14	
65			5	45			5	40			5	35			5
55			5	40			5	35			5	30			5
45			5	35			5	30			5	25			5
40			5	30			5	25			5	25			5
65			5	45			5	40			5	35			5
55			5	40			5	35			5	29			5
45			5	35			5	30			5	25			5
40			5	30			5	25			5	25			5

Note) The maximum counting speed may be lower than the above-mentioned values when the HSC target value match ON/OFF instruction and other interrupt programs are executed simultaneously.

Ramco National www.PanasonicSensors.com 1-800-280-6933

Pulse input/output performance

Independent control

High-speed		Medium-speed		Maximum output frequency kHz	
CH0	CH1	CH2	CH3	High-speed CH	Medium-speed CH
Available				100	
Available	Available			100	
Available	Available	Available		100	20
Available	Available	Available	Available	100	20

Note) Even if all channels are used, they can be used within the ranges above.

Interpolation control

High-speed	Medium-speed	Maximum output frequency kHz (Composite speed)	
CH0	CH2	High-speed CH	Medium-speed CH
Available		100	
Available	Available	100	20

Note) Even if all channels are used for the interpolation function, they can be used within the ranges above.

Ramco National www.PanasonicSensors.com 1-800-280-6933

Restrictions on I/O allocations

- Various functions listed in the table of specifications cannot be allocated to one I/O at the same time.

Allocations of input X and restrictions when using the high-speed counter function

When using the high-speed counter, it is necessary to set how to use the input by system registers.

C14/C30/C60 Tr type

Pulse / Signal	High-speed				Medium-speed			
	CH0	CH1	CH2	CH3	CH4	CH5	CH6	CH7
Single-phase input	X0	X1	X2	X3	X4	X5	X6	X7
2-phase input	X0, X1	-	X2, X3	-	X4, X5	-	X6, X7	-
Reset input	X6	-	X7	-	-	-	-	-

Note) The X4, X5, X6 and X7 are also used for the home input of the pulse output. Use them only for either one signal.

Allocations of output Y and restrictions when using the pulse output function

When using the pulse output function, it is necessary to set how to use the input/output by system registers.

C14 Tr type

Pulse / Signal		High-speed		Medium-speed
		CH0	CH1	CH2
CW	PULSE	Y0	Y2	Y4
CCW	SIGN	Y1	Y3	Y5
Deviation counter clear output		Y4	Y5	-
Home input		X4	X5	X6

Note) The Y4 and Y5 of the medium-speed pulse are also used for the deviation counter clear signal. The X4, X5 and X6 of the home input are also used for the input of the high-speed counter. Use them only for either one signal.

Note:

- With the C14, if the home return is executed with the deviation counter clear for the pulse output CH0, set the Y4 to the normal output by the system register.
- With the C14, if the home return is executed with the deviation counter clear for the pulse output CH1, set the Y5 to the normal output by the system register.
- If the home return is executed, set the home input by the system register 401. If the home return is executed without the setting, an operation error occurs.

C30/C60 Tr type

Pulse / Signal		High-speed		Medium-speed	
		CH0	CH1	CH2	CH3
CW	PULSE	Y0	Y2	Y4	Y6
CCW	SIGN	Y1	Y3	Y5	Y7
Deviation counter clear output		Y8	Y9	-	-
Home input		X4	X5	X6	X7

Note) The X4, X5, X6 and X7 of the home input are also used for the input of the high-speed counter. Use them only for either one signal.

Note:

- If the home return is executed, set the home input by the system register 401. If the home return is executed without the setting, an operation error occurs.

Restrictions on the execution of related instructions (F166 to F175)

- If an instruction related to the high-speed counter “F166 to F175” is executed, the control flag (special internal relay: R9110 to R911D) corresponding to the channel used turns on.
- Please be aware that the control flag “in progress” may change while a scan is being carried out. To prevent multiple read access to this special internal relay, it is recommended to generate a copy of it at the beginning of the program.
- When the control flag for a channel turns on, another instruction using that same channel cannot be executed.

Ramco National www.PanasonicSensors.com 1-800-280-6933

9.2.3 Booting Time

The booting time is the time span from the execution of the instruction to the actual pulse output.

Type of instruction	Booting time	
Pulse output instruction F171 (SPDH) Trapezoidal control/home return	CW/CCW is set : Pulse/direction is set :	Approx. 200 μs (with 30 steps) Approx. 400 μs (with 60 steps) Approx. 500 μs (with 30 steps) Note) Approx. 700 μs (with 60 steps) Note)
Pulse output instruction F172 (PLSH) JOG operation	CW/CCW is set : Pulse/direction is set :	Approx. 20 μs Approx. 320 μs Note)
Pulse output instruction F174 (SP0H) Data table control	CW/CCW is set : Pulse/direction is set :	Approx. 30 μs Approx. 330 μs Note)
PWM output instruction F173 (PWMH)	Approx. 30 μs	

Note) If pulse/direction is set, a waiting time (approx. 300 μs) is included from the time that the direction output goes on until the pulse output instruction can be executed.

Ramco National www.PanasonicSensors.com 1-800-280-6933

9.3 High-speed Counter Function

9.3.1 Overview of High-speed Counter Function

- The high-speed counter function counts the input signals, and when the count reaches the target value, turns on and off the desired output.
- To turn on an output when the target value is matched, use the target value match ON instruction F166 (HC1S). To turn off an output, use the target value match OFF instruction F167 (HC1R).
- Preset the output to be turned on and off with the SET/RET instruction.

Setting the system register

In order to use the high-speed counter function, it is necessary to set the system registers No. 400 and 401.

9.3.2 Input Modes and Count

Incremental input mode

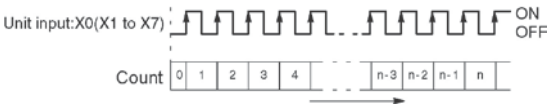

Decremental input mode

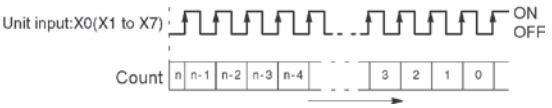

Two-phase input mode

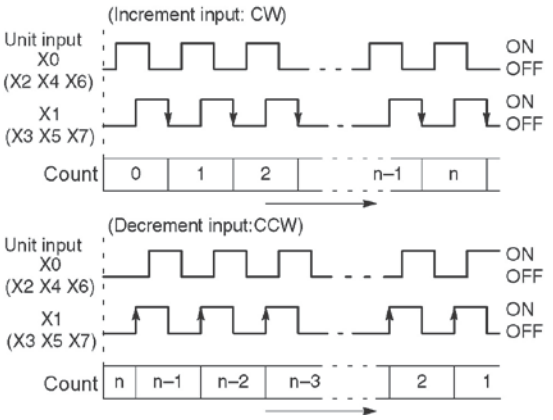

Individual input mode (Incremental/decremental input mode)

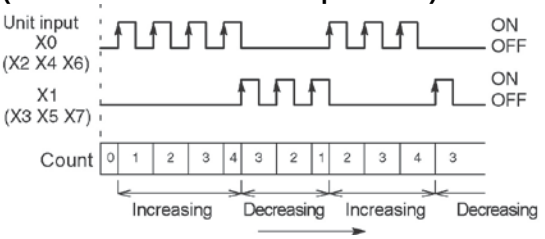

Direction discrimination

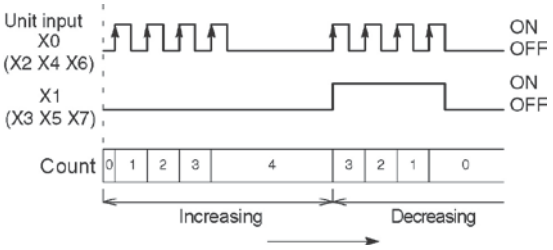

Ramco National www.PanasonicSensors.com 1-800-280-6933

Count for reset input
(Incremental input mode)

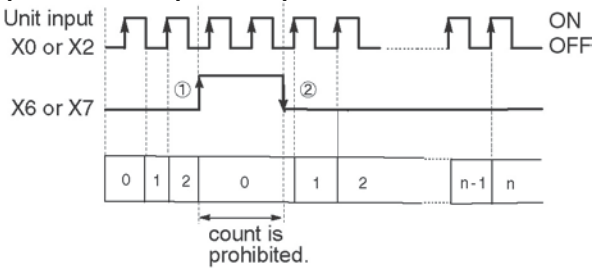

The reset input is executed by the interruption at (1) on (edge) and (2) off (edge).
(1) on (edge) … Count disable, Elapsed value clear
(2) off (edge) … Count enable
DT90052 (bit2): “able/disable” setting of the input can be set by the reset input.

9.3.3 Minimum Input Pulse Width

For the period T (1/frequency), a minimum input pulse width of T/2 (single-phase input) or T/4 (two-phase input) is required.

<Single phase>

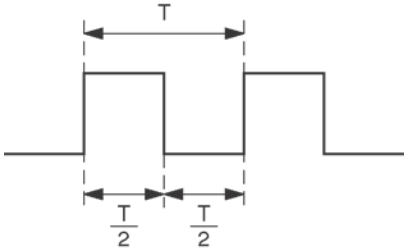

<Two-phase>

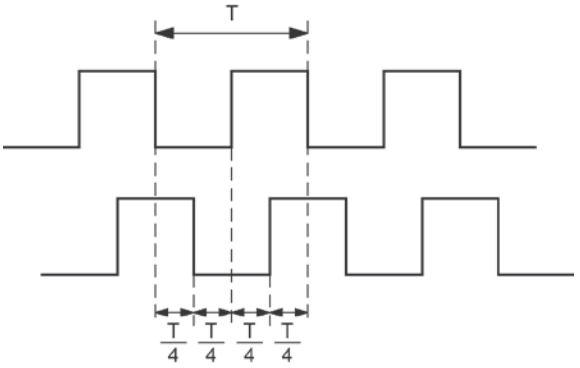

Ramco National www.PanasonicSensors.com 1-800-280-6933

9.3.4 I/O Allocation

- As shown in the table of specifications, the inputs and outputs used will differ depending on the channel number being used.
- The output turned on and off can be specified with instructions F166 (HC1S) and F167 (HC1R) for desired output (Yn:n<300).

When using CH0 of the high-speed counter with incremental input and reset input

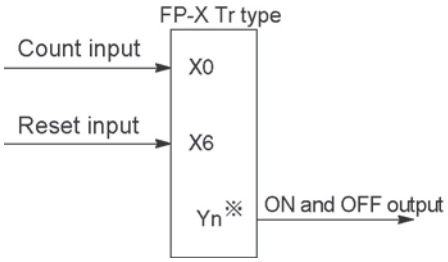

* The output turned on and off when the target value is reached can be specified as arbitrary output of the main unit or add-on cassette.

When using CH0 of the high-speed counter with two-phase input and reset input

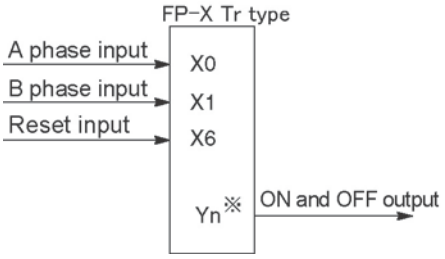

* The output turned on and off when the target value is reached can be specified as arbitrary output of the main unit or add-on cassette.

Reference: <9.2.1 Table of Specifications> <9.2.2 Functions Used and Restrictions>

9.3.5 Instructions used with High-speed Counter Function

High-speed counter control instruction (F0)

- This instruction is used for counter operations such as software reset and count disable.
- Specify this instruction together with the special data register DT90052.
- Once this instruction is executed, the settings will remain until this instruction is executed again.

Operations that can be performed with this instruction

- Counter software reset (bit0)
- Counting operation enable/disable (bit1)
- Hardware reset enable/disable (bit2)
- Clear high-speed counter instructions F166 to F167
- Clear target value match interrupt

Example: Performing a software reset

In case of CH0

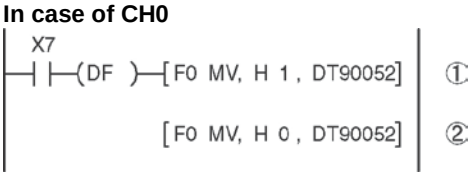

In case of CH1

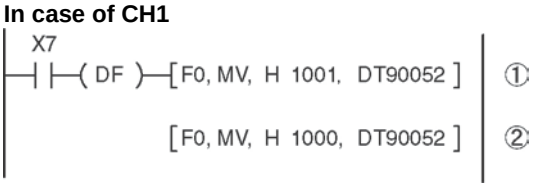

In the above program, the reset is performed in step (1) and 0 is entered just after that in step (2). The count is now ready for operation. If it is only reset, counting will not be performed.

Ramco National www.PanasonicSensors.com 1-800-280-6933

High-speed counter/pulse output control flag area of FP-X Tr type

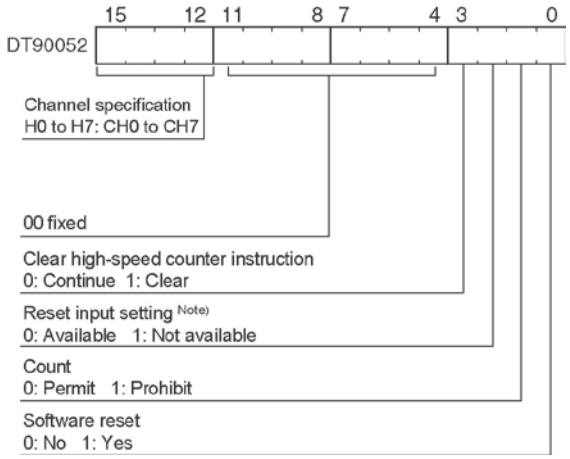

- The area DT90052 for writing channels and control codes is allocated as shown in the left figure.
- Control codes written with an F0 (MV) instruction are stored by channel in special data registers DT90370 to DT90377.

Note)

- In the reset input setting, the reset input (X6 or X7) for CH0 or CH2 allocated in the high-speed counter setting of the system registers are defined to “enable/disable”.
- The high-speed counter to be used with the reset input is CH0 and CH2 only.

High-speed counter control code monitor area

High-speed counter Channel No.	Control code monitor area	
	FP-X Ry type	FP-X Tr type
ch0	DT90360	DT90370
ch1	DT90361	DT90371
ch2	DT90362	DT90372
ch3	DT90363	DT90373
ch4	DT90364	DT90374
ch5	DT90365	DT90375
ch6	DT90366	DT90376
ch7	DT90367	DT90377
ch8	DT90368	-
ch9	DT90369	-
chA	DT90370	-
chB	DT90371	-

Elapsed value write and read instruction (F1)

- This instruction changes or reads the elapsed value of the high-speed counter.
- Specify this instruction together with the special data register DT90300.
- The elapsed value is stored as 32-bit data in the combined area of special data registers DT90300 and DT90301.
- Use this F1 (DMV) instruction to set the elapsed value.

Example 1: Writing the elapsed value

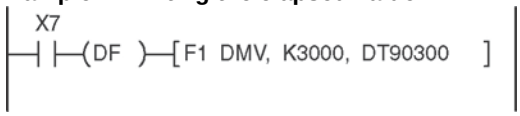

Set the initial value of K3000 in the high-speed counter.

Example 2: Reading the elapsed value

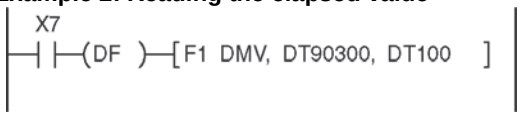

Read the elapsed value of the high-speed counter and copies it to DT100 and DT101.

Ramco National www.PanasonicSensors.com 1-800-280-6933

Target value match ON instruction (F166)

Example 1:

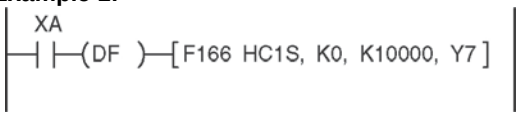

If the elapsed value (DT90300 and DT90301) for channel 0 matches K10000, output Y7 turns on.

Example 2:

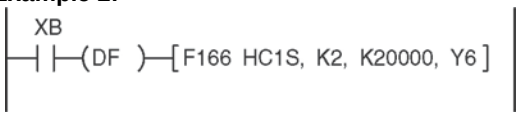

If the elapsed value (DT90308 and DT90309) for channel 2 matches K20000, output Y6 turns on.

Target value match OFF instruction (F167)

Example 1:

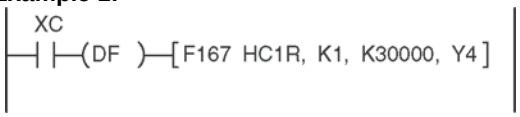

If the elapsed value (DT90304 and DT90305) for channel 1 matches K30000, output Y4 turns off.

Example 2:

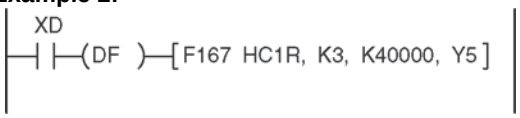

If the elapsed value (DT90312 and DT90313) for channel 3 matches K40000, output Y5 turns off.

FP-X Tr type – Elapsed value and target value areas of high-speed counter ch0 to ch7

High-speed counter Channel No.	Control flag	Elapsed value area	Target value area
ch0	R9110	DT90300 to DT90301	DT90302 to DT90303
ch1	R9111	DT90304 to DT90305	DT90304 to DT90307
ch2	R9112	DT90308 to DT90309	DT90310 to DT90311
ch3	R9113	DT90312 to DT90313	DT90314 to DT90315
ch4	R9114	DT90316 to DT90317	DT90318 to DT90319
ch5	R9115	DT90320 to DT90321	DT90322 to DT90323
ch6	R9116	DT90324 to DT90325	DT90326 to DT90327
ch7	R9117	DT90328 to DT90329	DT90330 to DT90331

Ramco National www.PanasonicSensors.com 1-800-280-6933

9.3.6 Sample program (Control Unit and Main Unit I/O)

Positioning operations with a single speed inverter

Wiring example

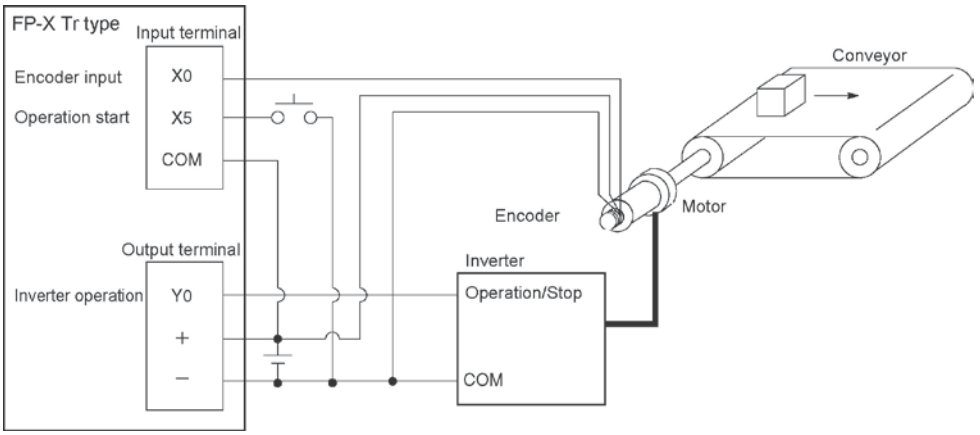

Operation chart

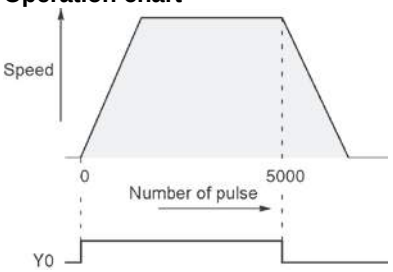

I/O allocation

I/O No.		Description
Main unit I/O	X0	Encoder input
	X5	Operation start signal
	Y0	Inverter operation signal
R100		Positioning operation running
R101		Positioning operation start
R102		Positioning done pulse
R9110		High-speed counter CH0 control flag

Program

When X5 is turned on, Y0 turns on and the conveyor begins moving. When the elapsed value (DT90300 and DT90301) reaches K5000, Y0 turns off and the conveyor stops.

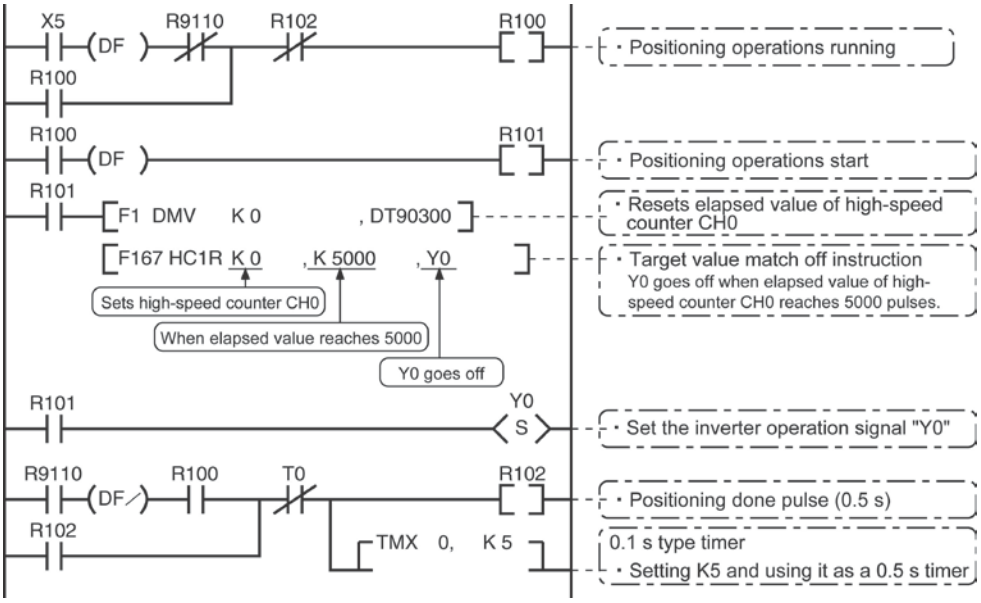

Ramco National www.PanasonicSensors.com 1-800-280-6933

Positioning operations with a double speed inverter

Wiring example

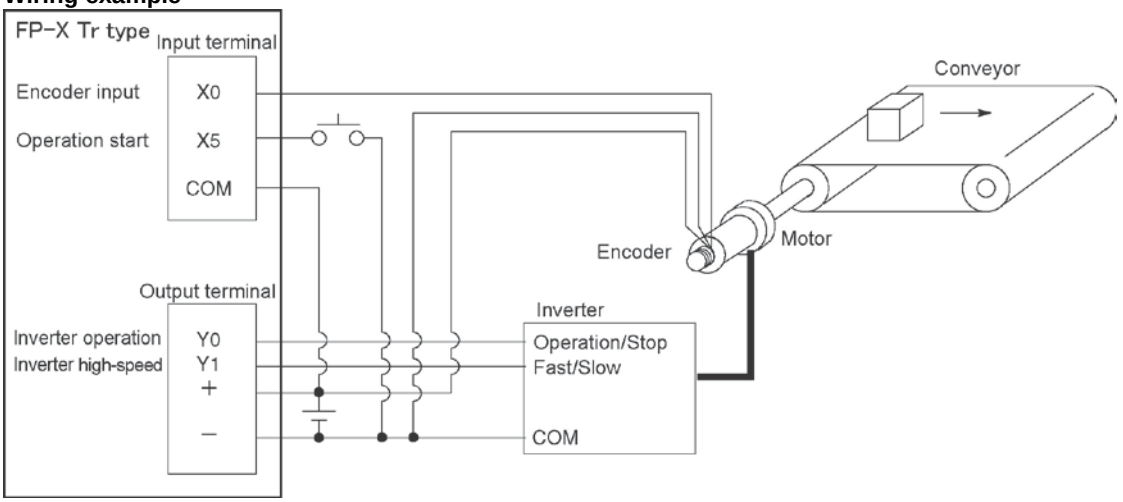

Operation chart

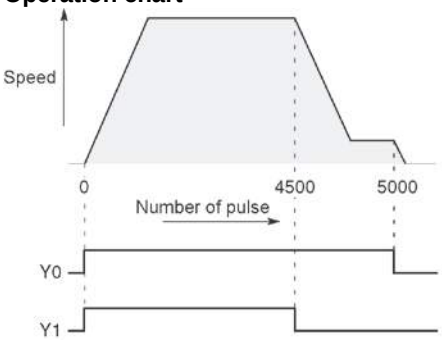

I/O allocation

I/O No.		Description
Main unit I/O	X0	Encoder input
	X5	Operation start signal
	Y0	Inverter operation signal
	Y1	Inverter high-speed signal
R100		Positioning operation running
R101		Positioning operation start
R102		Arrival at deceleration point
R103		Positioning done pulse
R900C		Comparison instruction <flag>
R9110		High-speed counter CH0 control flag

Ramco National www.PanasonicSensors.com 1-800-280-6933

Program

When X5 is turned on, Y0 and Y1 turn on and the conveyor begins moving. When the elapsed value (DT90300 and DT90301) reaches K4500, Y1 turns off and the conveyor begins decelerating. When the elapsed value reaches K5000, Y0 turns off and the conveyor stops.

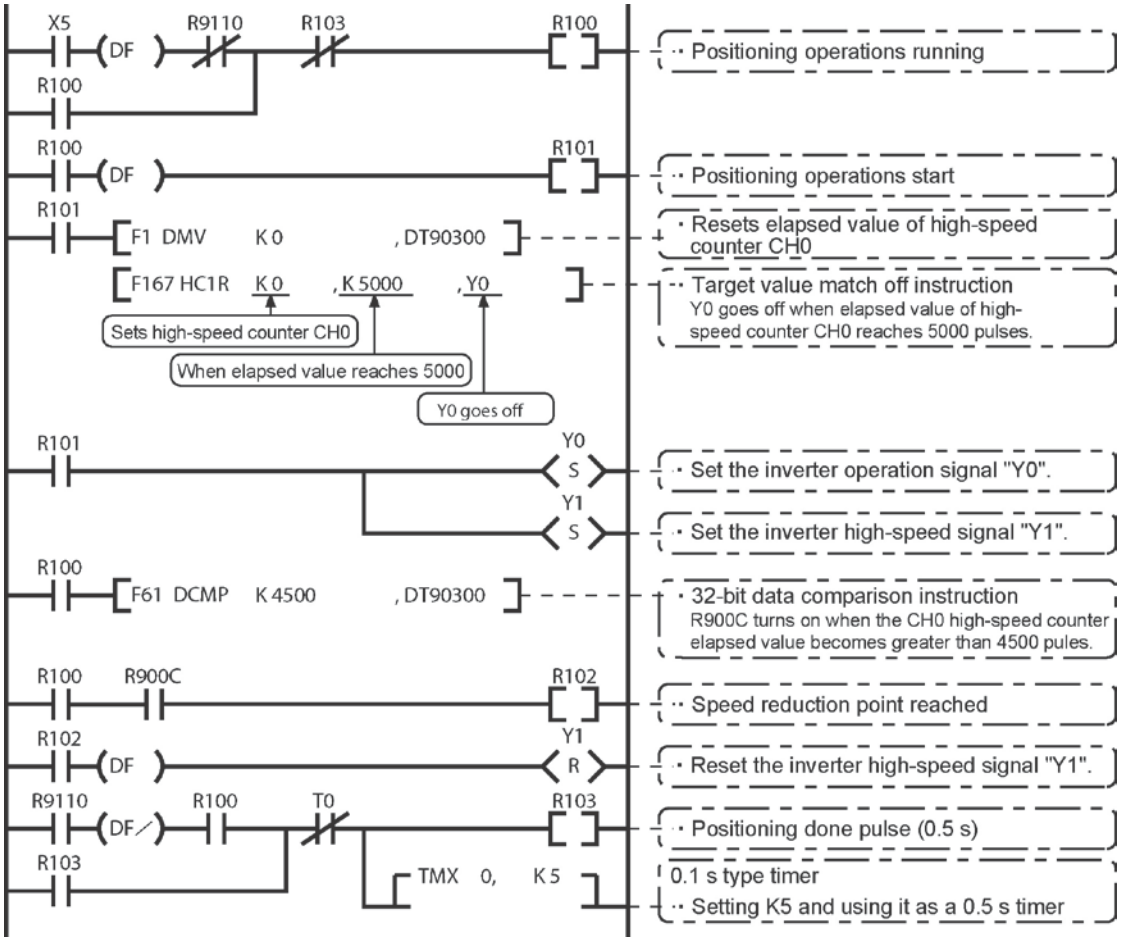

Ramco National www.PanasonicSensors.com 1-800-280-6933

9.4 Pulse Output Function

9.4.1 Overview of Pulse Output Function

Instructions used and controls

Together with a commercially available pulse-string input type motor driver, the pulse output function can be used for positioning control.

Type of control	Exclusive instruction	Description
Trapezoidal control	F171 (SPDH)	Provides trapezoidal (table-shaped) control for automatically obtaining pulse outputs by specifying the initial speed, maximum speed, acceleration/deceleration time and target value.
Home return		Enables automatic home return operation.
JOG operation	F172 (PLSH)	Causes pulses to be output as long as the execution condition is on. A target value can also be set, so that pulse output stops at the point when the target value is matched.
Data table control	F174 (SP0H)	Enables positioning control in accordance with the data table.
Linear interpolation	F175 (SPSH)	Enables pulses to be output using linear interpolation control, by specifying the composite speed, the acceleration/deceleration time, and the target value.

Note:

- With the Tr type, the CPU output is used to perform the pulse output function. The pulse I/O cassette (AFPX-PLS) cannot be used.

Setting the system register

When using the pulse output function, it is necessary to set the system register No. 402.
When performing the home return by F174 (SPDH) instruction, the home input should be specified in the system register No. 401.

Ramco National www.PanasonicSensors.com 1-800-280-6933

9.4.2 Types of Pulse Output Method and Operation Modes

Clockwise/counter-clockwise output method

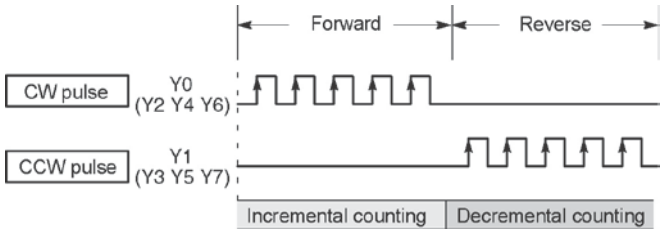

Control is carried out using two pulses: a forward rotation pulse and a reverse rotation pulse.

Pulse/direction output method (forward: OFF/reverse: ON)

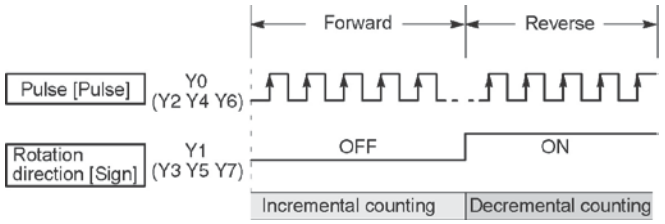

Control is carried out using one pulse output to specify the speed and another to specify the direction of rotation with on/off signals. In this mode, forward rotation is carried out when the rotation direction signal is OFF.

Pulse/direction output method (forward: ON/reverse: OFF)

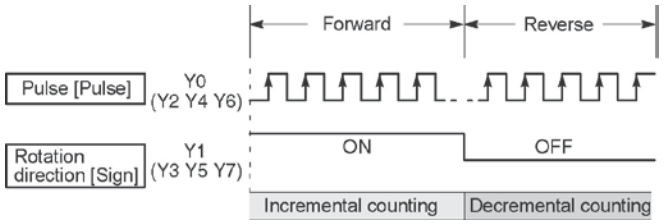

Control is carried out using one pulse output to specify the speed and another to specify the direction of rotation with on/off signals. In this mode, forward rotation is carried out when the rotation direction signal is ON.

Note:

The output signals are the number of the built-in output of the main unit.
When the pulse output has been set, only the pulse is output, and the values of the output memories Y0, Y1, Y2, Y3, Y4 and Y5 are not output. So, they will not be turned on/off even if monitoring with the tool.

Ramco National www.PanasonicSensors.com 1-800-280-6933

Operation mode

Incremental <Relative value control>

Outputs the pulses set with the target value.

Selected Mode / Target value	CW/CCW	Pulse and direction forward OFF/ reverse ON	Pulse and direction forward ON/ reverse OFF	HSC counting Method
Positive	**Pulse output from CW**	**Pulse output when direction output is OFF**	**Pulse output when direction output is ON**	**Incremental**
Negative	**Pulse output from CCW**	**Pulse output when direction output is ON**	**Pulse output when direction output is OFF**	**Decremental**

Example:

When the current position (value of elapsed value area) is 5000, the pulse of 1000 is output from CW by executing the pulse output instruction with the target value +1000, and the current position will be 6000.

Absolute <Absolute value control>

Outputs a number of pulses equal to the difference between the set target value and the current value.

Selected Mode / Target value	CW/CCW	Pulse and direction forward OFF/ reverse ON	Pulse and direction forward ON/ reverse OFF	HSC counting method
Target value greater than current value	**Pulse output from CW**	**Pulse output when direction output is OFF**	**Pulse output when direction output is ON**	**Incremental**
Target value less than current value	**Pulse output from CCW**	**Pulse output when direction output is ON**	**Pulse output when direction output is OFF**	**Decremental**

Example:

When the current position (value of elapsed value area) is 5000, the pulse of 4000 is output from CCW by executing the pulse output instruction with the target value +1000, and the current position will be 1000.

Home return

- When executing the F171 (SPDH) instruction, the pulse is continuously output until the home input (X4, X5, X6 or X7) is enabled (for the C14 Tr type, X4, X5 or X6).
- To decelerate the movement when near the home position, designate a near home input and set bit 4 of special data register DT90052 to off → on → off.
- The deviation counter clear output can be output when home return has been completed. (However, the deviation counter clear output is available only for CH0 and CH1.)

JOG operation

- Pulses are output from the specified channel while the trigger for F172 (PLSH) instruction is in the ON state. Also, the pulse output can be stopped when the specified target value is matched.
- The direction output and output frequency are specified by F172 (PLSH) instruction.

Ramco National www.PanasonicSensors.com 1-800-280-6933

Precautions on programming

Address	Flag conditions	The uses of the flag in the program
R911C Control flag (CH0)	Turns on during execution of pulse output instructions and then maintains that state during pulse output from CH0. This flag is the same for instructions F166 to F175.	Use this to prohibit the simultaneous execution of other high-speed counter instructions and pulse output instructions, and to verify completion of an action.
R911D Control flag (CH1)	Turns on during execution of pulse output instructions and then maintains that state during pulse output from CH0. This flag is the same for instructions F166 to F175.	Use this to prohibit the simultaneous execution of other high-speed counter instructions and pulse output instructions, and to verify completion of an action.
R911E Control flag (CH2)	Turns on during execution of pulse output instructions and then maintains that state during pulse output from CH2. This flag is the same for instructions F166 to F175.	Use this to prohibit the simultaneous execution of other high-speed counter instructions and pulse output instructions, and to verify completion of an action.
R911F Control flag (CH3)	Turns on during execution of pulse output instructions and then maintains that state during pulse output from CH3. This flag is the same for instructions F166 to F175.	Use this to prohibit the simultaneous execution of other high-speed counter instructions and pulse output instructions, and to verify completion of an action.

Note:

- The above flags vary during scanning.
  Example: If the above flags are used for more than one time as input conditions, there may be the different states in the same scan. Replace with internal relays at the beginning of the program as a measure.

Ramco National www.PanasonicSensors.com 1-800-280-6933

9.4.3 I/O Allocation

Double pulse input driver
(CW pulse input and CCW pulse input method)

- Two output contacts are used as a pulse output for “CW, CCW”.
- The I/O allocation of pulse output terminal and home input is determined by the channel used.
- Set the control code for F171 (SPDH) instruction to “CW/CCW”.

<When using CH0>

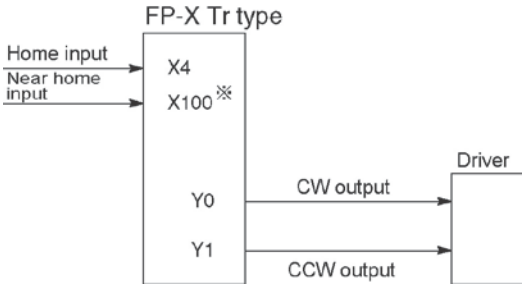

* Input that is not used for other applications is specified for the near home input.

Note) If the deviation counter clear output function is performed when the home return is done, Y4 is used for the C14 Tr type, and Y8 is used for the C30/C60 Tr type.

<When using CH1>

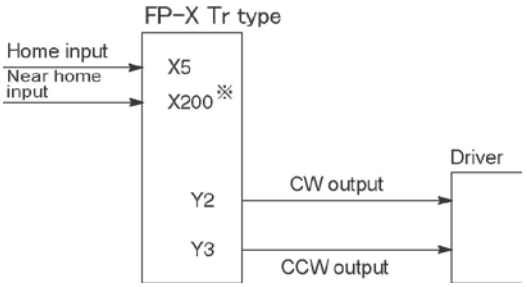

* Input that is not used for other applications is specified for the near home input.

Note) If the deviation counter clear output function is performed when the home return is done, Y5 is used for the C14 Tr type, and Y9 is used for the C30/C60 Tr type.

<When using CH2>

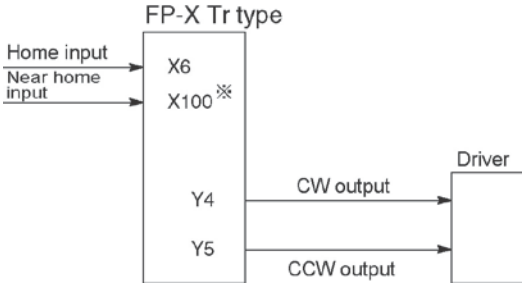

* Input that is not used for other applications is specified for the near home input.

<When using CH3> (C30, C60 Tr type only)

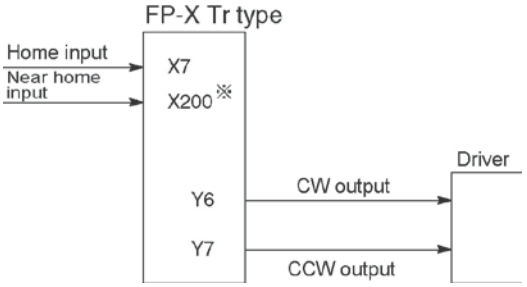

* Input that is not used for other applications is specified for the near home input.

Note) The deviation counter clear output function is not available for the CH2 and CH3.

Reference: <9.2.1 Table of Specifications> <9.2.2 Functions Used and Restrictions>

Ramco National www.PanasonicSensors.com 1-800-280-6933

Single pulse input driver
(pulse input and directional switching input method)

- One output point is used as a pulse output and the other output is used as a direction output.
- The I/O allocation of pulse output terminal, direction output terminal, and home input is determined by the channel used.
- Near home input is substituted by allocating the desired contact and turning on and off the <bit4> of special data register DT90052.

<When using CH0>

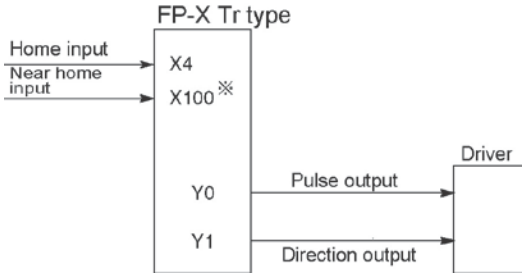

* Input that is not used for other applications is specified for the near home input.

Note) If the deviation counter clear output function is performed when the home return is done, Y4 is used for the C14 Tr type, and Y8 is used for the C30/C60 Tr type.

<When using CH1>

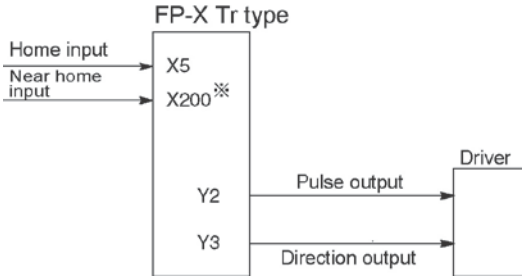

* Input that is not used for other applications is specified for the near home input.

Note) If the deviation counter clear output function is performed when the home return is done, Y5 is used for the C14 Tr type, and Y9 is used for the C30/C60 Tr type.

<When using CH2>

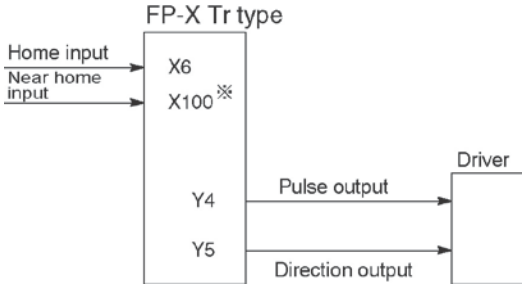

* Input that is not used for other applications is specified for the near home input.

<When using CH3> (C30, C60 Tr type only)

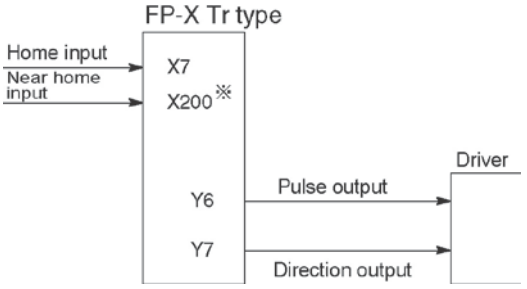

* Input that is not used for other applications is specified for the near home input.

Note) The deviation counter clear output function is not available for the CH2 and CH3.

Reference: <9.2.1 Table of Specifications> <9.2.2 Functions Used and Restrictions>

Ramco National www.PanasonicSensors.com 1-800-280-6933

9.4.4 Pulse output control instructions (F0) (F1)

Pulse output control instruction (F0)

- This instruction is used for resetting the built-in high-speed counter, stopping the pulse output, and setting and resetting the near home input.
- Specify this F0 (MV) instruction together with special data register DT90052.
- Once this instruction is executed, the settings will remain until this instruction is executed again.

Example 1:
Enable the near home input during home return operations and begin deceleration.
In case of CH0

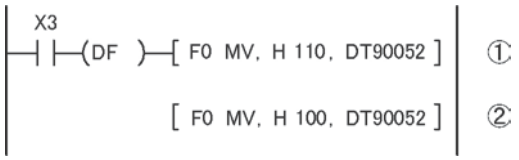

In case of CH1

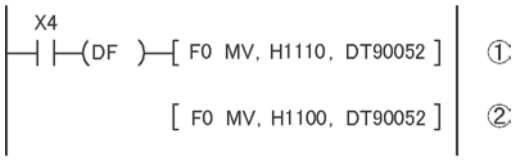

In these programs, the near home input is enabled in step (1) and 0 is entered just after that in step (2) to perform the preset operations.

Example 2:
Performing a forced stop of the pulse output.
In case of CH0

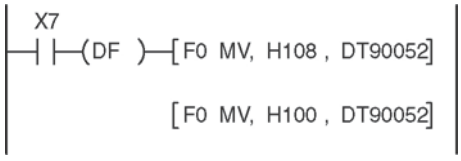

In case of CH1

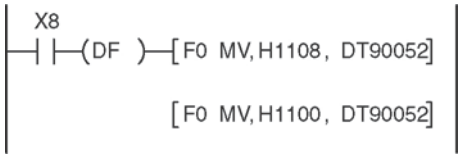

The output counting value of the elapsed value area may be different from the input counting value of the motor side if the forced stop is executed by these programs.

Ramco National www.PanasonicSensors.com 1-800-280-6933

Key Point: High-speed counter/pulse output control flag area of FP-X Tr type

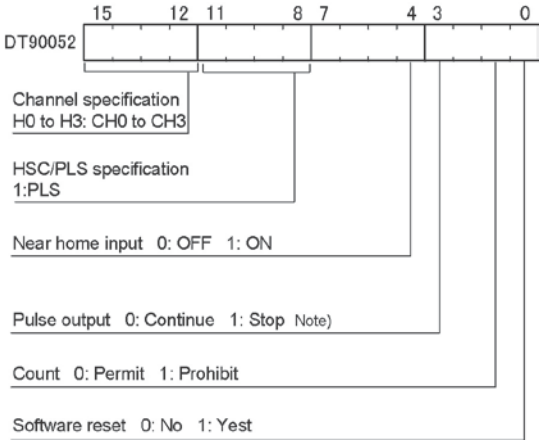

- The area DT90052 for writing channels and control codes is allocated as shown in the left figure.
- Control codes written with an F0 (MV) instruction are stored by channel in special data register DT90380 to DT90383.

Note) The output counting value of the elapsed value area may be different from the input counting value of the motor side if the pulse output is stopped by the "Continue/stop of pulse output". After the pulse output stops, execute the home return.

Pulse output control code monitor area

High-speed counter Channel No.	Control code monitor area	
	FP-X Ry type	FP-X Tr type
ch0	DT90372	DT90380
ch1	DT90373	DT90381
ch2	-	DT90382
ch3	-	DT90383

Reference: <9.2.1 Table of specifications> for information on the special data register.

Elapsed value write and read instruction (F1)

- This instruction is used to read the pulse number counted by the pulse output control.
- Specify this F1 (DMV) instruction together with the special data register DT90348.
- The elapsed value is stored as 32-bit data in the combined area of special data register DT90348 and DT90349.
- Use only this F1 (DMV) instruction to set the elapsed value.

Example 1:

Writing the elapsed value

Set the initial value of K3000 in the pulse output CH0.

Reading the elapsed value

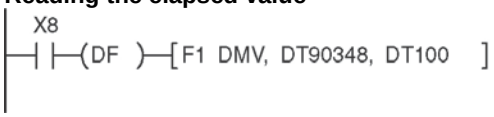

Reads the elapsed value of the pulse output CH0 to DT100 and DT101.

FP-X Tr type - Elapsed value and target value areas of pulse output ch0 to ch3

Pulse output Channel No.	Control flag	Elapsed value area	Target value area
ch0	R911C	DT90348 to DT90349	DT90350 to DT90351
ch1	R911D	DT90352 to DT90353	DT90354 to DT90355
ch2	R911E	DT90356 to DT90357	DT90358 to DT90359
ch3	R911F	DT90360 to DT90361	DT90362 to DT90363

Ramco National www.PanasonicSensors.com 1-800-280-6933

9.4.5 Wiring for Pulse Output Sample Program (F171 to F174)

Wiring example

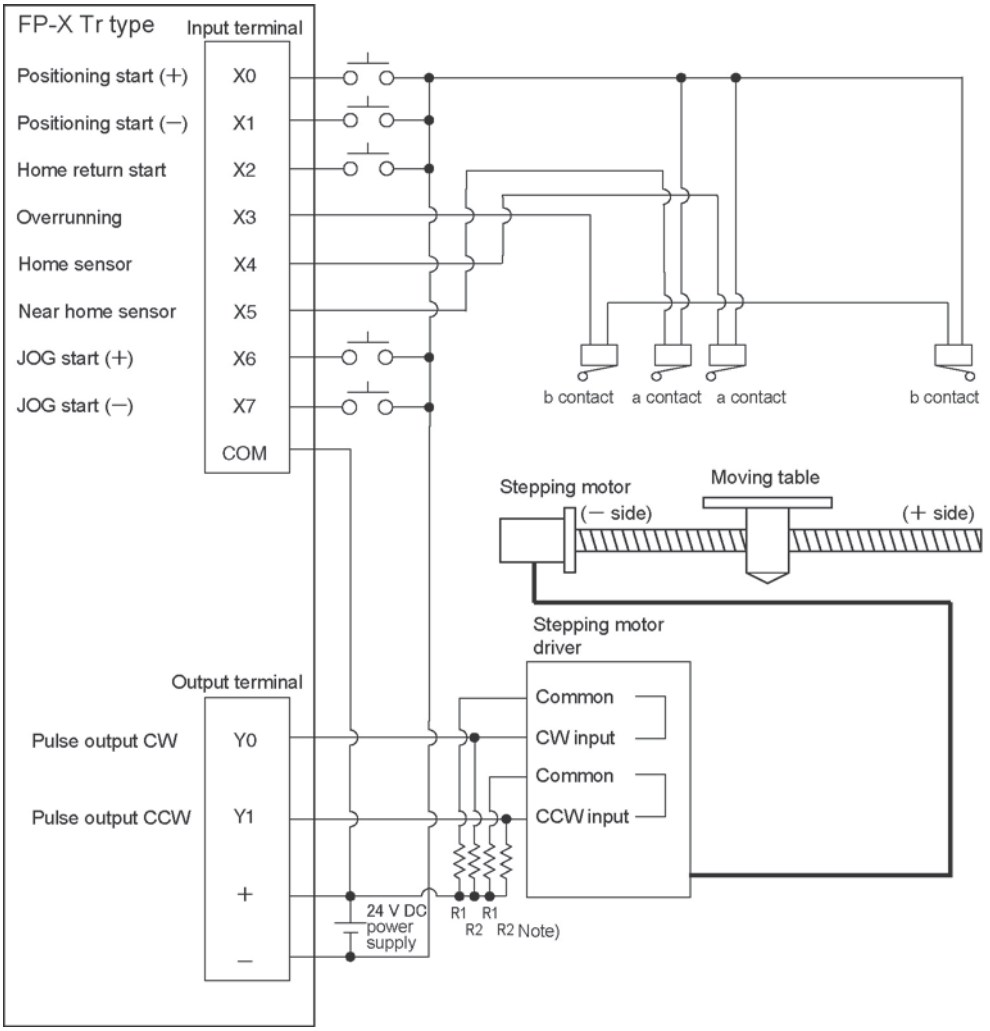

Note) When the stepping motor input is a 5 V optical coupler type, connect a 2 kΩ (1/2 W) resistor with the R1 and a 2 kΩ (1/2 W) to 470 Ω (2 W) resistor with the R2.

Table of I/O allocation

I/O No.	Description	I/O No.	Description
X0	Positioning start signal (+)	**X7**	JOG start signal (-)
X1	Positioning start signal (-)	**Y0**	Pulse output CW
X2	Home return start signal	**Y1**	Pulse output CCW
X3	Overrunning signal	**R10**	Positioning in progress
X4	Home sensor	**R11**	Positioning operation start
X5	Near home sensor	**R12**	Positioning done pulse
X6	JOG start signal (+)	**R911C**	High-speed counter control flag for CH0

Ramco National www.PanasonicSensors.com 1-800-280-6933

9.4.6 Positioning Control Instruction F171 - Trapezoidal

• This instruction automatically performs trapezoidal control according to the specified data table.

```
X0
─┤ ├─(DF )─[F1 DMV, H1100,  DT100  ]
         [F1 DMV, K500,   DT102  ]
         [F1 DMV, K5000,  DT104  ]
         [F1 DMV, K300,   DT106  ]
         [F1 DMV, K10000, DT108  ]
         [F1 DMV, K0,     DT110  ]
         [F171 SPDH, DT100, K0   ]
```

Pulses are generated from output Y0 at an initial speed of 500 Hz, a maximum speed of 5000 Hz, an acceleration/deceleration time of 300 ms, and a movement amount of 10000 pulses.

When this program runs, the positioning data table and the pulse output diagram will be as shown below.

●Positioning data table

DT100 DT101	Control code	*1	: H 1100
DT102 DT103	Initial speed	*2	: 500 Hz
DT104 DT105	Max. speed	*2	: 5000 Hz
DT106 DT107	Acceleration/ deceleration time	*3	: 300 ms
DT108 DT109	Target value	*4	: 10000 pulse
DT110 DT111	Pulse stop		: K0

●Pulse output diagram

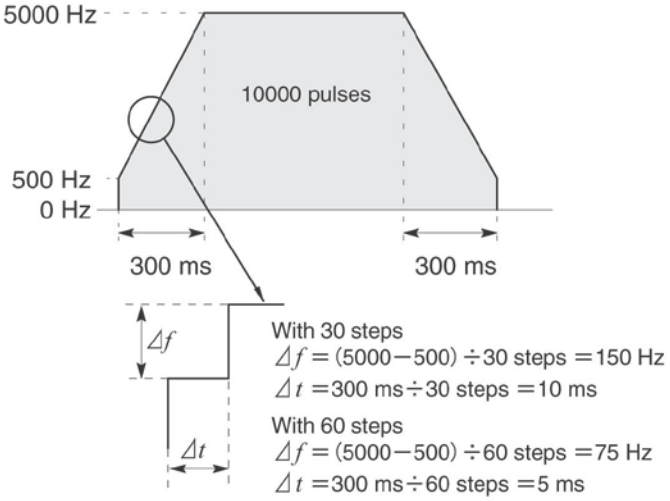

●Regarding the specification of acceleration/deceleration time

・For specifying acceleration/deceleration time, No. of steps and initial speed, set the value to be calculated by the formula below. Specify acceleration/deceleration time in the 30 ms unit with 30 steps, and in the 60 ms unit with 60 steps. *5

Acceleration/deceleration time

t [ms]≧(No. of steps × 1000)/Initial speed f0 [Hz]

Ramco National www.PanasonicSensors.com 1-800-280-6933

(*1) : Control code <H constant> H □□□□□□□□

■Number of acceleration/deceleration steps
0 : 30 steps
1 : 60 steps

■Duty (on width)
0 : Duty 1/2 (50%)
1 : Duty 1/4 (25%)

■Frequency range
0 : 1.5 Hz to 9.8 kHz
1 : 48 Hz to 100 kHz
2 : 191 Hz to 100 kHz

■Operation mode and output method
00 : Incremental CW/CCW
02 : Incremental pulse and direction (forward off / reverse on)
03 : Incremental pulse and direction (forward on/ reverse off)
10 : Absolute CW/CCW
12 : Absolute pulse and direction (forward off / reverse on)
13 : Absolute pulse and direction (forward on/ reverse off)

(*2) : Speed (Frequency) (Hz) <K constant>

Frequency range
0 : 1.5 Hz to 9.8 kHz [K1 to K9800 (unit : Hz)]
(Max. error near 9.8 kHZ approx. −0.9 kHz)
* Set "K1" to specify 1.5 Hz.
1 : 48 Hz to 100 kHz [K48 to K100000 (unit : Hz)]
(Max. error near 100 kHz approx. −3 kHz)
2 : 191 Hz to 100 kHz [K191 to K100000 (unit : Hz)]
(Max. error near 100 kHz approx. −0.8 kHz)

Initial speed: Set 30 kHz or less.
However, for the medium-speed channels CH2 and CH3 of the Tr type, it can be set to a maximum of K20000 Hz.

(*3) : Aceleration/deceleration time (ms) <K constant>
With 30 steps: K30 to K32760 (Specify by 30 steps) *5
With 60 steps: K60 to K32760 (Specify by 60 steps) *5

(*4) : Target value <K constant>
K−2147483648 to K2147483647

(*5) : When the time is not specified in 30 ms units nor 60 ms units, it will be automatically corrected to the multiple value (larger value) of 30 ms or 60 ms.

Ramco National www.PanasonicSensors.com 1-800-280-6933

Sample program

Incremental Position Control Operation: Plus Direction

When X0 turns on, the pulse is output from CW output Y0 of the specified channel CH0.

Note) In that case, the memory Y0 does not turn on/off according to the pulse output, and also the monitoring is not possible.

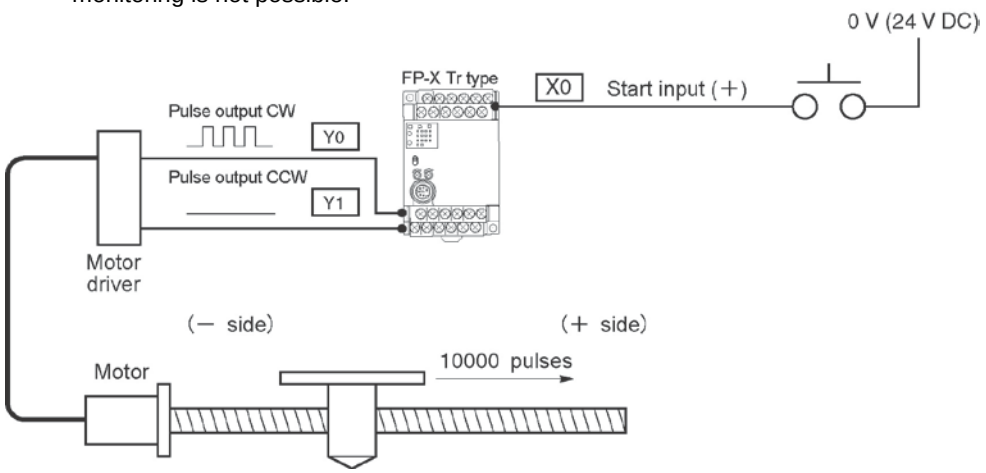

Program

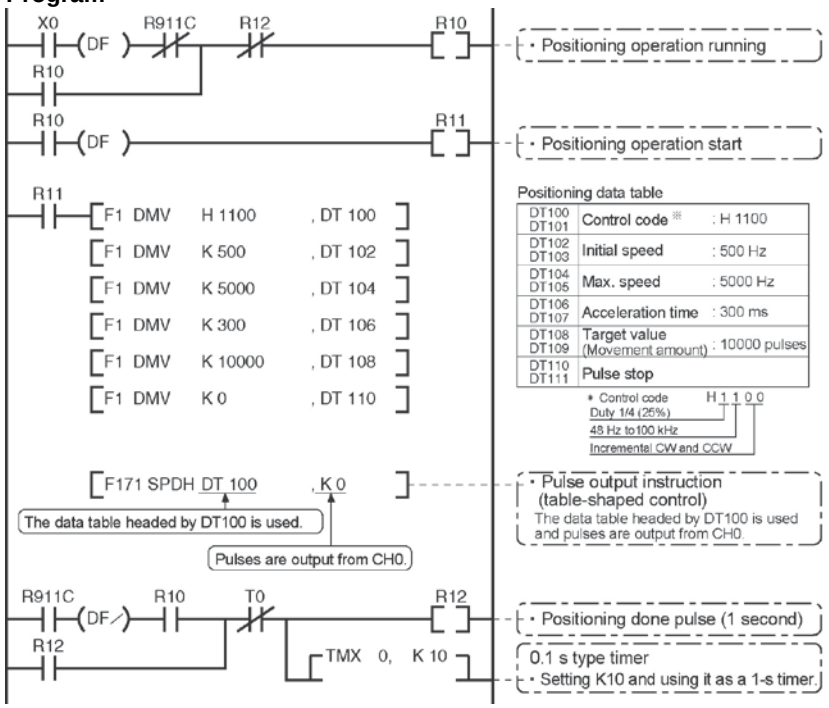

Pulse output diagram

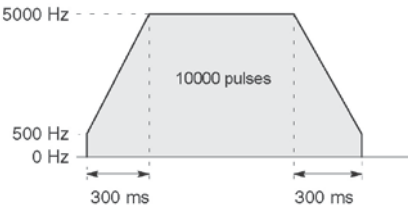

Ramco National www.PanasonicSensors.com 1-800-280-6933

Incremental Position Control Operation: Minus Direction

When X1 turns on, the pulse is output from CCW output Y1 of the specified channel CH0.
Note) In that case, the memory Y1 does not turn on/off according to the pulse output.

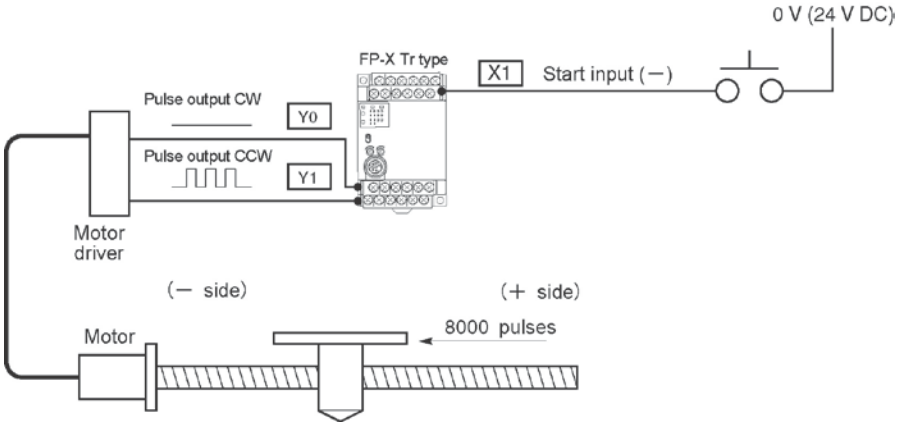

Program

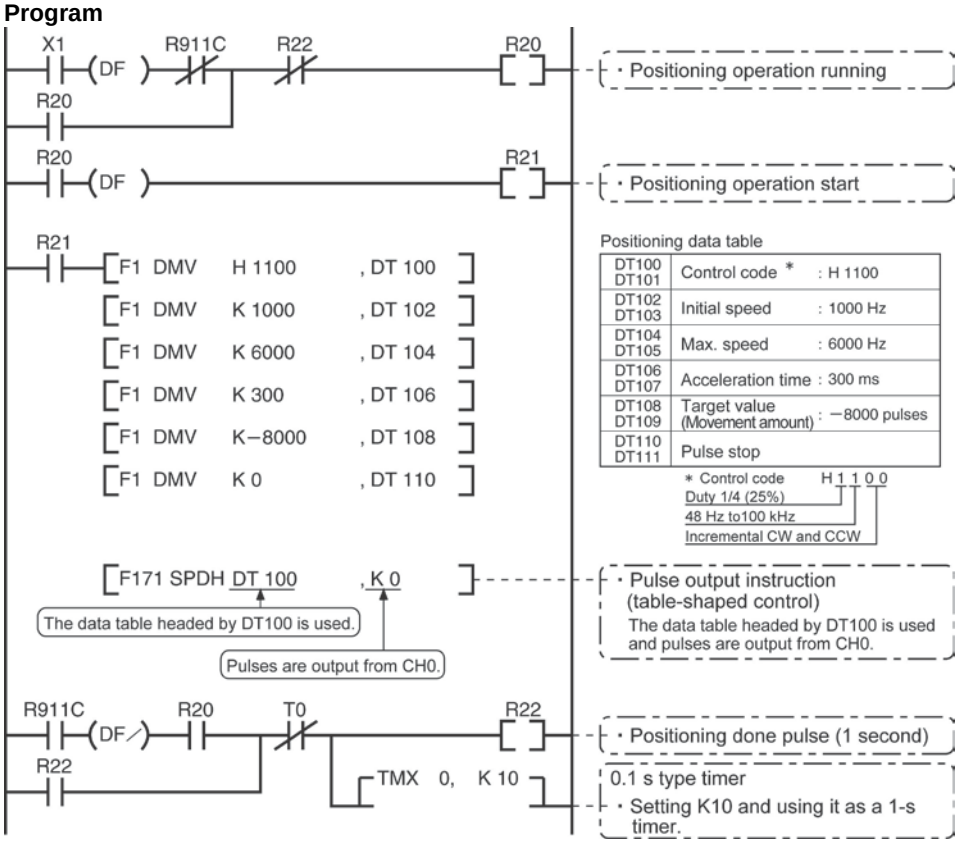

Pulse output diagram

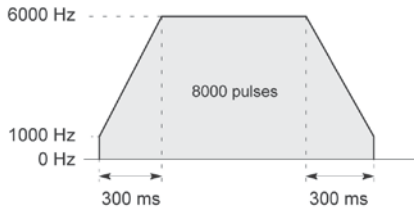

Ramco National www.PanasonicSensors.com 1-800-280-6933

Absolute position control operation

When X1 is turned on, pulses are output from CW output Y0 or CCW output Y1 of the specified channel CH0. If the current value at that point is larger than 22000, the pulses are output from Y1, and if the value is smaller than 22000, the pulses are output from Y0.

Note) In that case, the memory Y0 or Y1 does not turn on/off according to the pulse output, and also the monitoring is not possible.

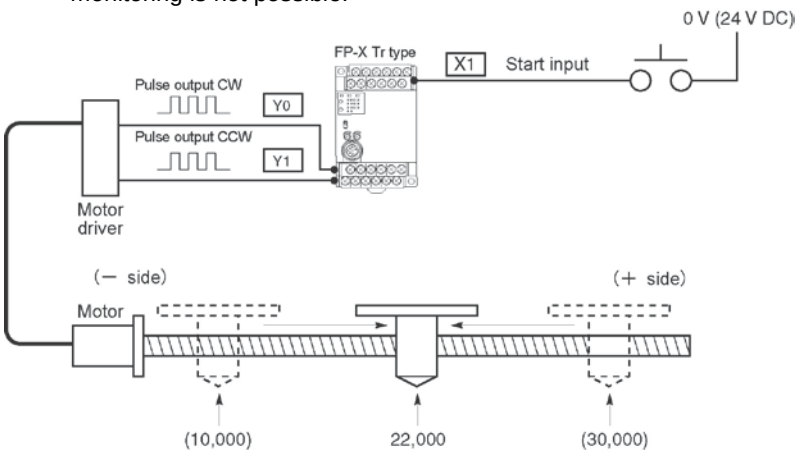

Regardless of the current value, its movement is towards position "22,000."

Program

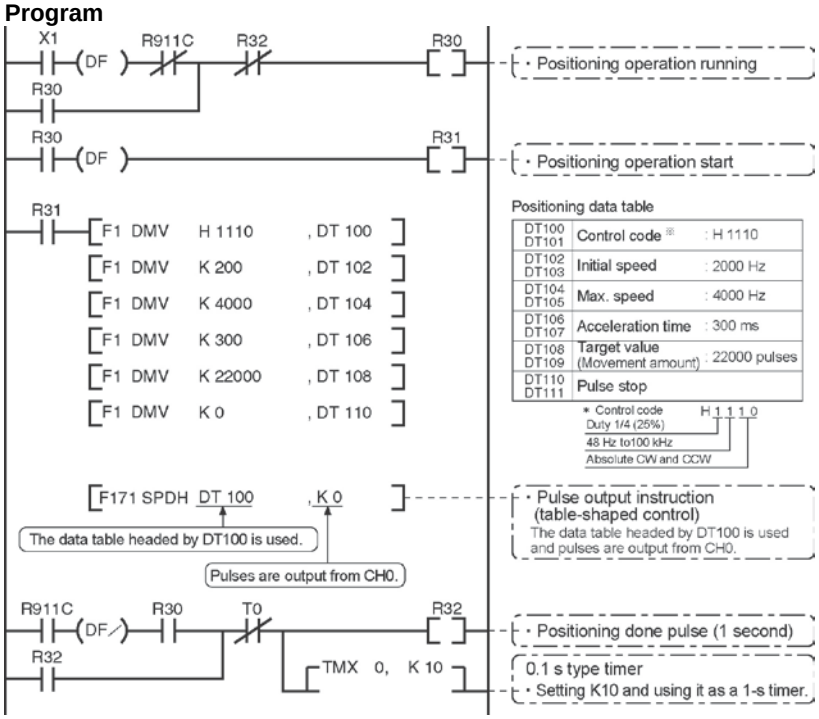

Pulse output diagram

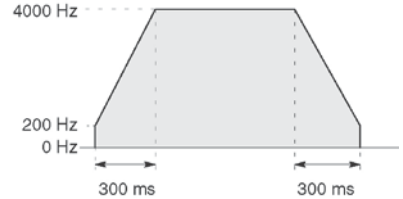

Ramco National www.PanasonicSensors.com 1-800-280-6933

9.4.7 Positioning Control Instruction F171 – Home Return (Common to Transistor type)

- This function performs home return according to the specified data table. The elapsed value area CH0 (DT90348, DT90349) and CH1 (DT90352, DT90353) is cleared to zero after the completion of home return.

Note) If the home return is executed, set the home input by the system register 401.
If the home return is executed without the setting, an operation error occurs.

```
X2
─┤ ├─(DF )─[F1 DMV, H1125,  DT200 ]
        [F1 DMV, K200,   DT202 ]
        [F1 DMV, K2000,  DT204 ]
        [F1 DMV, K150,   DT206 ]
        [F1 DMV, K10,    DT208 ]
        [F171 SPDH, DT200, K0  ]
```

Pulses are output from Y1 and a return to the home position is carried out at an initial speed of 200 Hz, a maximum speed of 2000 Hz, and an acceleration/deceleration time of 150 ms.

When this program runs, the positioning data table and the pulse output diagram will be as shown below.

●Positioning data table

DT200 DT201	Control code	*1	: H 1125
DT202 DT203	Initial speed	*2	: 200 Hz
DT204 DT205	Max. speed	*2	: 2000 Hz
DT206 DT207	Acceleration/ deceleration time	*3	: 150 ms
DT208 DT209	Deviation counter clear signal output time	*4	: 10 ms

●Pulse output diagram
(when home position proximity input is not used)

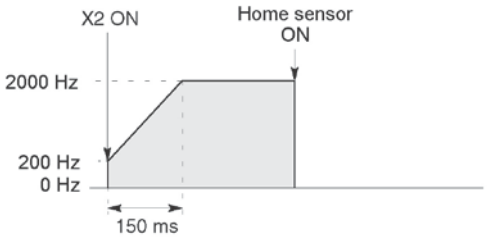

●Pulse output
(when home position proximity input is used)

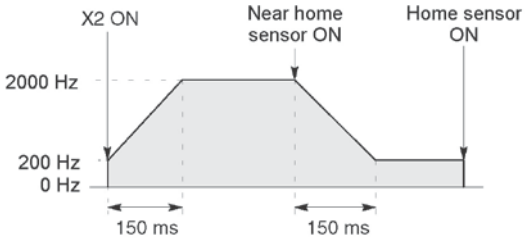

●Regarding the specification of acceleration/deceleration

- For specifying acceleration/deceleration time, No. of steps and initial speed, set the value to be calculated by the formula below. Specify acceleration/deceleration time in the 30 ms unit with 30 steps, and in the 60 ms unit with 60 steps. *5

Acceleration/deceleration time
t [ms] ≧ (No. of steps × 1000)/Initial speed f0 [Hz]

Ramco National www.PanasonicSensors.com 1-800-280-6933

(*1) : Control code <H constant> H □□□□□□□□

0 : Fixed

■Number of acceleration/deceleration steps
0 : 30 steps
1 : 60 steps

■Duty (on width)
0 : Duty 1/2 (50%)
1 : Duty 1/4 (25%)

■Frequency range
0 : 1.5 Hz to 9.8 kHz
1 : 48 Hz to 100 kHz
2 : 191 Hz to 100 kHz

■Optional mode and output type

20	Type I home return	CW
21	Type I home return	CCW
22	Type I home return	Direction output OFF
23	Type I home return	Direction output ON
24	Type I home return	CW and deviation counter clear
25	Type I home return	CCW and deviation counter clear
26	Type I home return	Direction output OFF and deviation counter clear
27	Type I home return	Direction output ON and deviation counter clear
30	Type II home return	CW
31	Type II home return	CCW
32	Type II home return	Direction output OFF
33	Type II home return	Direction output ON
34	Type II home return	CW and deviation counter clear
35	Type II home return	CCW and deviation counter clear
36	Type II home return	Direction output OFF and deviation counter clear
37	Type II home return	Direction output ON and deviation counter clear

(*2) : Speed (Frequency) (Hz) <K constant>

Frequency range

0 : 1.5 Hz to 9.8 kHz [K1 to K9800 (unit : Hz)]
(Max. error near 9.8 kHZ approx. −0.9 kHz)
* Set "K1" to specify 1.5 Hz.

1 : 48 Hz to 100 kHz [K48 to K100000 (unit : Hz)]
(Max. error near 100 kHz approx. −3 kHz)
* Duty 1/4 is recommended for this range.

2 : 191 Hz to 100 kHz [K191 to K100000 (unit : Hz)]
(Max. error near 100 kHz approx. −0.8 kHz)
* Duty 1/4 is recommended for this range.

Initial speed: Set 30 kHz or less.
However, for the medium-speed channels CH2 and CH3 of the Tr type, it can be set to a maximum of K20000 Hz.

(*3) : Aceleration/deceleration time (ms) <K constant>

With 30 steps: K30 to K32760 (Specify by 30 steps) *5
With 60 steps: K60 to K32760 (Specify by 60 steps) *5

(*4) : Deviation counter clear signal (ms) <K constant>

Output time of deviation counter clear signal is specified.
0.5 ms to 100 ms [K0 to K100] Set value and error (0.5 ms or less)
*Specify "K0" when not using or when specifying 0.5 ms.
Deviation counter clear signal is allocated in Y102 for CH0 and in Y202 for CH1.

(*5) : When the time is not specified in 30 ms units nor 60 ms units, it will be automatically corrected to the multiple value (larger value) of 30 ms or 60 ms.

Ramco National www.PanasonicSensors.com 1-800-280-6933

Home return operation modes

There are two operation modes for a home return with the FP-X: Type I and Type II.

Type I home return

The home input is effective regardless of whether or not here is a near home input, whether deceleration is taking place, or whether deceleration has been completed.

・Without near home input

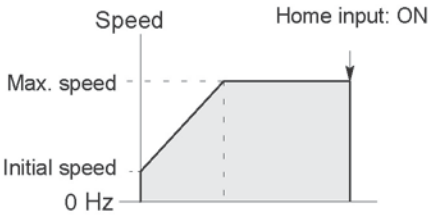

・With near home input

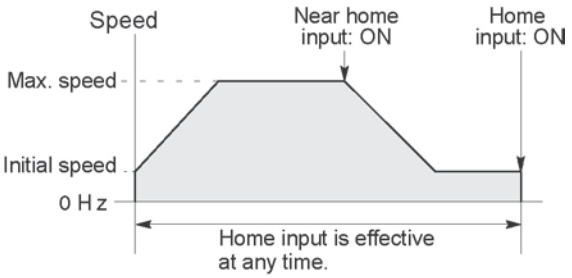

・Home input ON during deceleration

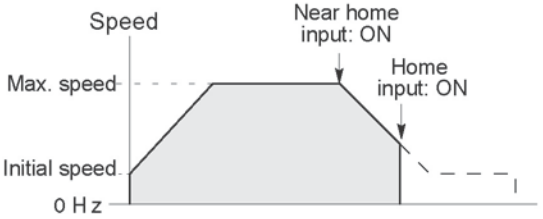

Type II home return

In this mode, the home input is effective only after deceleration (started by near home input) has been completed.

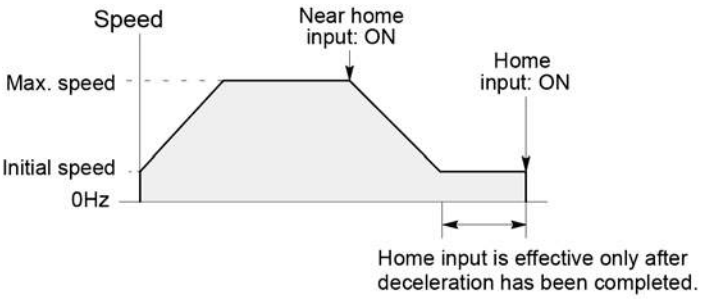

Reference:

The pulse output control instruction (F0) is used for the near home input.
<9.4.4 Pulse output control instructions (F0) (F1)>.

Ramco National www.PanasonicSensors.com 1-800-280-6933

Sample program

Home return operation using CH0: Minus direction

When X2 turns on, a pulse is output from CCW output Y1 of the specified channel CH0 and the return to home begins. When X5 turns on, deceleration begins, and when X4 turns on, home return is completed. After the return to home is completed, the elapsed value areas DT90348 and DT90349 are cleared to 0.

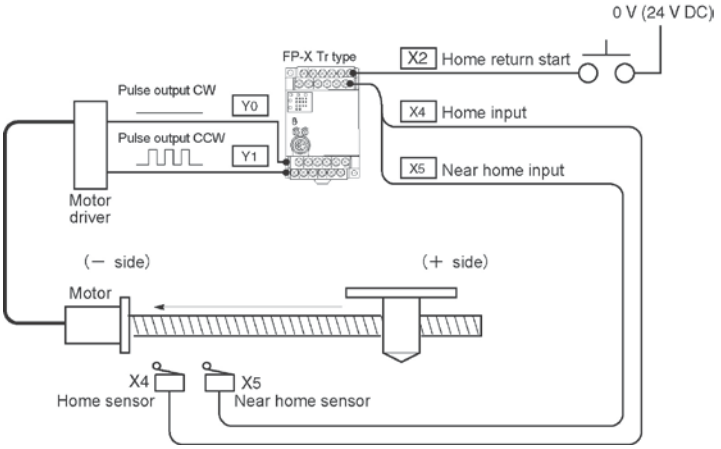

Program

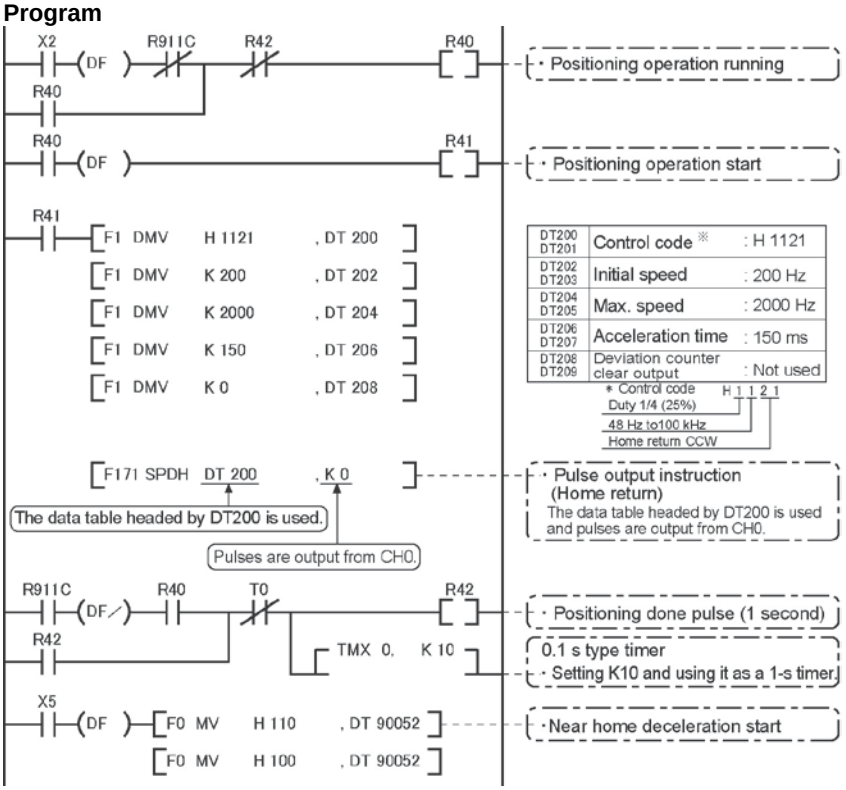

Pulse output diagram

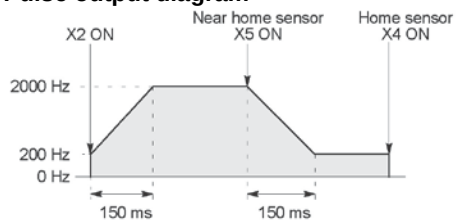

Ramco National www.PanasonicSensors.com 1-800-280-6933

Sample program

Home return operation using CH1: Plus direction

When X3 turns on, a pulse is output from CW output Y2 of the specified channel CH1 and the return to home begins. When X6 turns on, deceleration begins, and when X5 turns on, home return is completed. After the return to home is completed, the elapsed value areas DT90352 and DT90353 are cleared to 0.

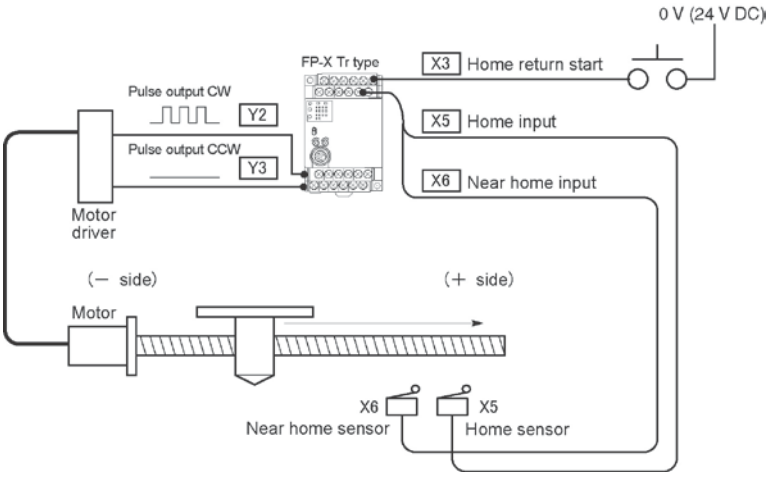

Program

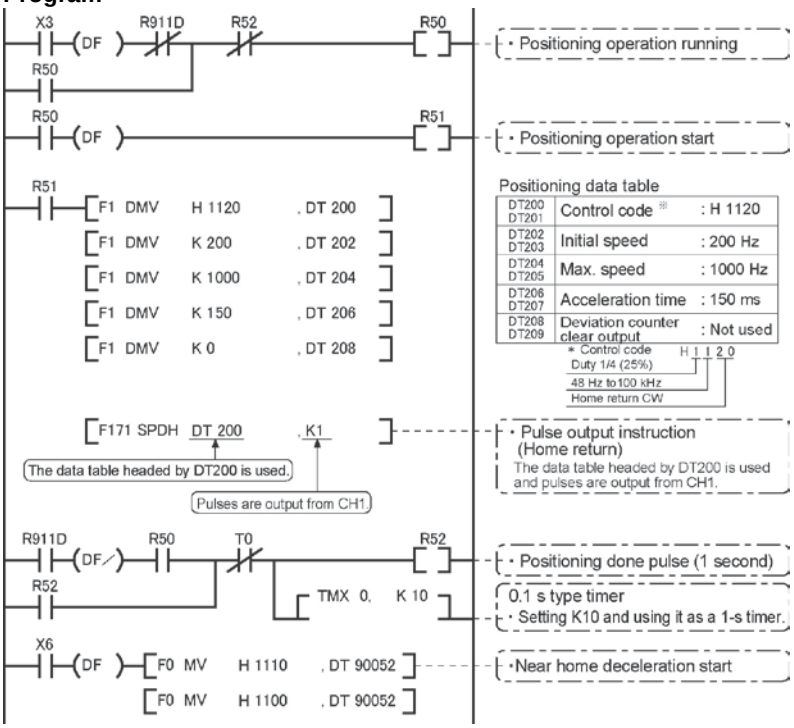

Pulse output diagram

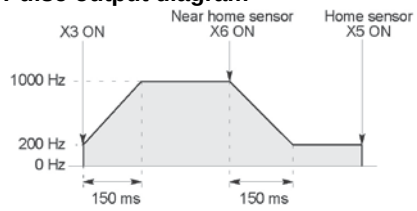

Ramco National www.PanasonicSensors.com 1-800-280-6933

9.4.8 Pulse Output Instruction F172 – JOG operation

- This instruction is used for JOG operation by obtaining a pulse from the desired output when the execution condition (trigger) turns on.

```
X6
─┤ ├──[F1 DMV , H1110, DT300    ]
      [F1 DMV , K300,  DT302    ]
      [F172 PLSH, DT300, K0     ]
```

The pulse of 300 Hz is output from Y0 during X6 is turned on.

When this program runs, the data table and the pulse output diagram will be as shown below.

●Data table

DT300 DT301	Control code *1	: H 1110
DT302 DT303	Frequency *2	: 300 Hz

●Pulse output diagram

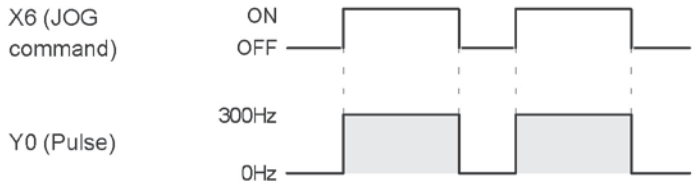

(*1) : Control code <H constant> H □□□□□□□□

0 : Fixed

■Target value setting
0 : Mode with no target value
1 : Target value match stop mode

■Duty (on width)
0 : Duty 1/2 (50%)
1 : Duty 1/4 (25%)

■Frequency range
0 : 1.5 Hz to 9.8 kHz
1 : 48 Hz to 100 kHz
2 : 191 Hz to 100 kHz

■Output method

00 : No counting	CW
01 : No counting	CCW
10 : Incremental counting	CW
12 : Incremental counting	Direction output OFF
13 : Incremental counting	Direction output ON
21 : Decremental counting	CCW
22 : Decremental counting	Direction output OFF
23 : Decremental counting	Direction output ON

Ramco National www.PanasonicSensors.com 1-800-280-6933

(*2) : Frequency (Hz) <K constant>

Frequency range

0 : 1.5 Hz to 9.8 kHz [K1 to K9800 (unit : Hz)]
(Max. error near 9.8 kHz approx. -0.9 kHz)
* Set "K1" to specify 1.5 Hz.

1 : 48 Hz to 100 kHz [K48 to K100000 (unit : Hz)]
(Max. error near 100 kHz approx. -3 kHz)

2 : 191 Hz to 100 kHz [K191 to K100000 (unit : Hz)]
(Max. error near 100 kHz approx. -0.8 kHz)

In case of count mode, set the frequency to 30 kHz or less for executing instructions at the first time.
However, for the medium-speed channels CH2 and CH3 of the Tr type, it can be set to a maximum of K20000 Hz.

(*3) : Target value (Absolute value)

This is used when setting the target value match stop mode. (Absolute only)
Designate the target value setting in the range indicated below.
If an out of range value is designated, the number of pulses output will be different than the designated value. The target value setting is ignored in the no count mode.

Output method	Range of target values which can be designated.
Incremental counting	Designate a value larger than the current value.
Decremental counting	Designate a value smaller than the current value.

Key Point:

The FP-X supports two operation modes for JOG operation, one in which no target value is specified, and one in which feed stops when the target value is reached.

Normal jogging operation feed (no target value specified)

Pulses are output in accordance with the conditions set in the data table, as long as execution condition is on.

●Data table

DT300 DT301	Control code ※1	: H 1110
DT302 DT303	Frequency ※2	: 300 Hz

●Pulse output diagram

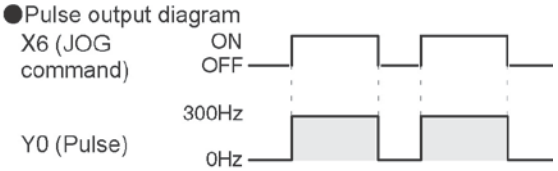

Output stops when target value is reached

A target value at which pulse output stops can be specified for jogging operation. As shown below, this mode is selected in the control code, and the target value (an absolute value) is specified in the data table.

●Data table

DT300 DT301	Control code ※1	: H 11110
DT302 DT303	Frequency ※2	: 300 Hz
DT304 DT305	Target value ※3	: K 1000

●Pulse output diagram

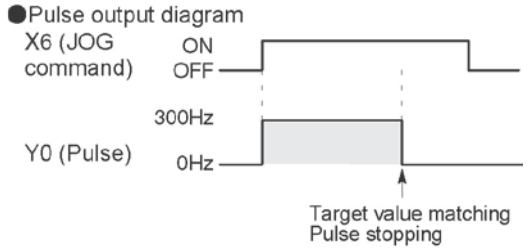

Ramco National www.PanasonicSensors.com 1-800-280-6933

Sample program

JOG operation : Plus direction

While X6 is in the ON state, a pulse is output from the CW output Y0 of the specified channel CH0.

Program

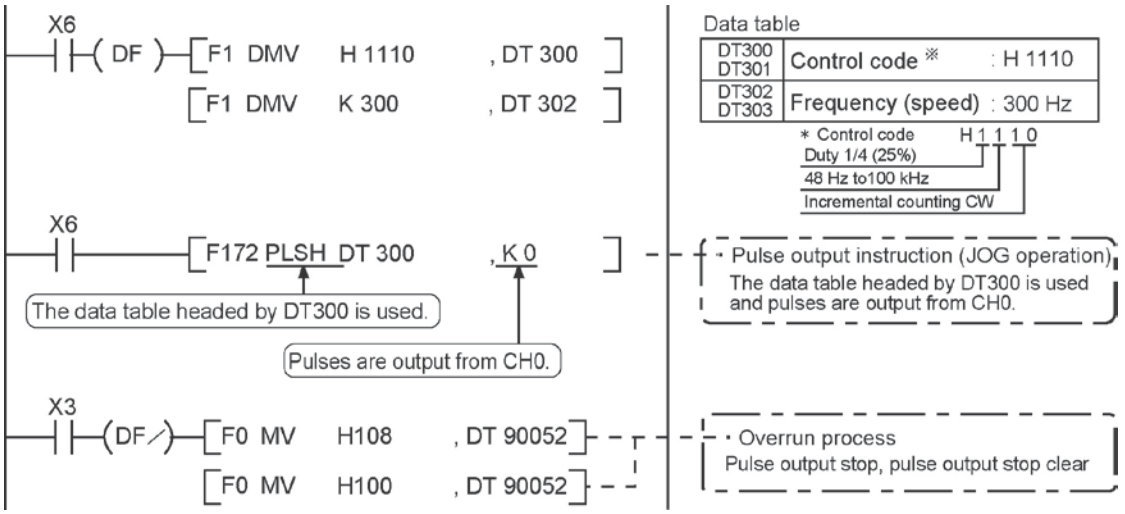

Pulse output diagram

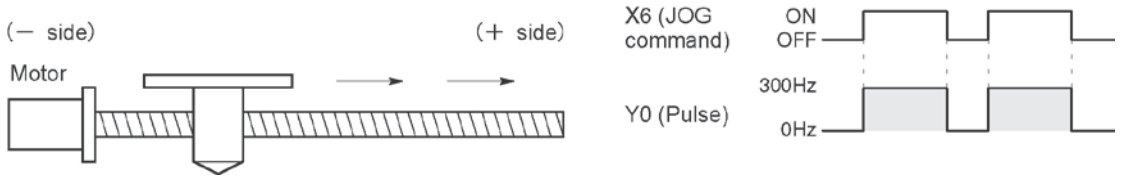

Ramco National www.PanasonicSensors.com 1-800-280-6933

JOG operation : Minus direction

While X7 is in the ON state, a pulse is output from the CCW output Y1 of the specified channel CH0.

Program

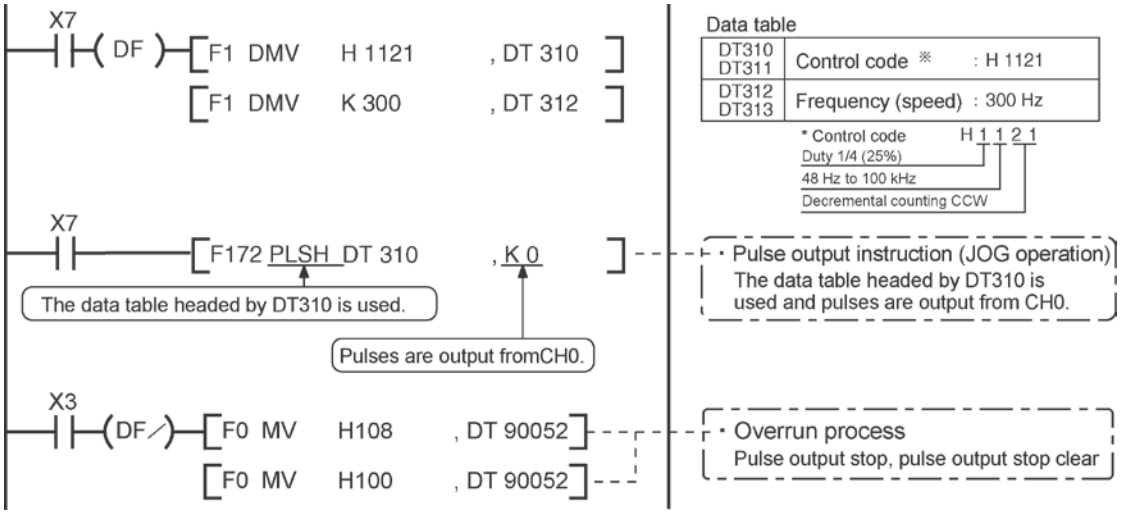

Pulse output diagram

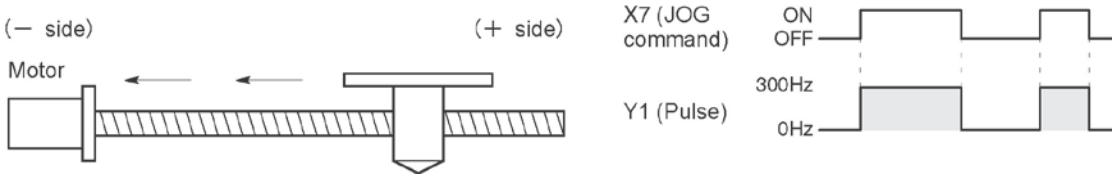

Reference:

The pulse output control instruction (F0) is used for the pulse output stop.

<9.4.4 Pulse output control instruction (F0) (F1)>

Ramco National www.PanasonicSensors.com 1-800-280-6933

9.4.9 Positioning Control Instruction F174 – Data Table Control

- Positioning is performed according to the specified data table.

```
R9010
 ┤├[F1 DMV , H 1200, DT400]   Control code "H1200"
   [F1 DMV , K 1000, DT402]   Frequency 1: 1000 Hz
   [F1 DMV , K 1000, DT404]   Targe value 1: 1000 pulses
   [F1 DMV , K 2500, DT406]   Frequency 2: 2500 Hz
   [F1 DMV , K 2000, DT408]   Target value 2: 2000 pulses
   [F1 DMV , K 5000, DT410]   Frequency 3: 5000 Hz
   [F1 DMV , K 5000, DT412]   Target value 3: 5000 pulses
   [F1 DMV , K 1000, DT414]   Frequency 4: 1000 Hz
   [F1 DMV , K 2000, DT416]   Target value 4: 2000 pulses
   [F1 DMV , K    0, DT418]   Pulse output stop
R10
 ┤├(DF)-[F174 SP0H,DT400,K0]  Pulse output start
```

When the execution condition R10 goes on, pulses are output from Y0 of the pulse I/O cassette at a frequency of 1000 Hz, and positioning begins.
At the point when 1000 pulses have been counted, the frequency switches to 2500 Hz. Positioning is then carried out sequentially in accordance with the values of the data table, until it stops at the data table containing the pulse output stop value (K0).
When the program runs, the data table and pulse output diagram are as shown below.

●Positioning data table

DT400 DT401	Control code	*1	: H 1200
DT402 DT403	Frequency 1	*2	: 1000 Hz
DT404 DT405	Target value 1	*3	: 1000 pulses
DT406 DT407	Frequency 2		: 2500 Hz
DT408 DT409	Target value 2		: 2000 pulses
DT410 DT411	Frequency 3		: 5000 Hz
DT412 DT413	Target value 3		: 5000 pulses
DT414 DT415	Frequency 4		: 1000 Hz
DT416 DT417	Target value 4		: 2000 pulses
DT418 DT419	Pulse output stop setting		: K 0

●Pulse output diagram

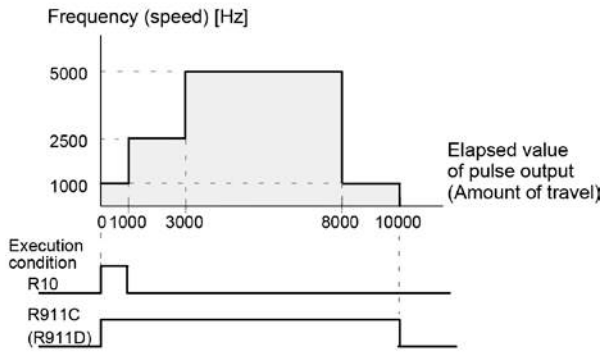

Note) When the execution condition R10 of the F174 (SP0H) instruction goes on, the high-speed counter control flag R911C (R911D) goes on. When the elapsed value reaches 10000 and pulse output stops, R911C (R911D) goes off.

Ramco National www.PanasonicSensors.com 1-800-280-6933

(*1) : Control code <H constant>

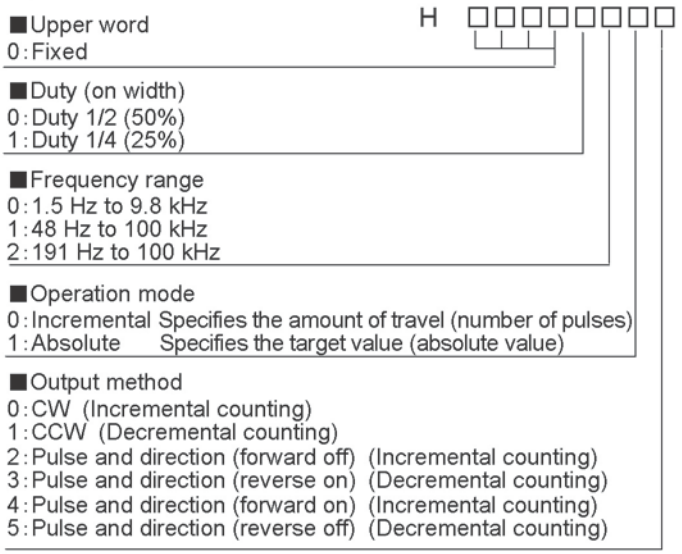

(*2) : Freqency (Hz) <K constant>

Frequency range

0 : 1.5 Hz to 9.8 kHz [K1 to K9800 (unit : Hz)]
(Max. error near 9.8 kHz approx. -0.9 kHz)
* Set "K1" to specify 1.5 Hz.

1 : 48 Hz to 100 kHz [K48 to K100000 (unit : Hz)]
(Max. error near 100 kHz approx. -3 kHz)

2 : 191 Hz to 100 kHz [K48 to K100000 (unit : Hz)]
(Max. error near 100 kHz approx. -0.8 kHz)

Set the frequency 1 which is initial speed to 30 kHz or less. However, for the medium-speed channels CH2 and CH3 of the Tr type, it can be set to a maximum of K20000 Hz.

(*2) : Target value (K−2147483648 to K2147483647

The value of the 32-bit data specified for the target value should be within the range indicated in the table below.

Specification of control code		Range of allowable target values
Operation mode	Output method	
Incremental	Incremental counting	Specifies a positive value.
	Decremental counting	Specifies a negative value.
Absolute	Incremental counting	Specifies a value larger than the current value
	Decremental counting	Specifies a value smaller than the current value

Ramco National www.PanasonicSensors.com 1-800-280-6933

9.4.10 Pulse Output Instruction F175 – Linear Interpolation

- The linear interpolation controls positioning with two axes according to the specified data table.

```
R11
─┤ ├─(DF )─[F1  DMV,  H1000,   DT500 ]
        [F1  DMV,  K500,    DT502 ]
        [F1  DMV,  K5000,   DT504 ]
        [F1  DMV,  K300,    DT506 ]
        [F1  DMV,  K5000,   DT508 ]
        [F1  DMV,  K2000,   DT510 ]
        [F175 SPSH,  DT500,  K0   ]
```

Pulses are output from the X axis (CH0) and the Y axis (CH1), so that the composite speed is an initial speed of 500 Hz, the maximum speed is 5000 Hz, and the acceleration/deceleration time is 300 ms. The two axes are controlled so that a linear path is followed to the target position.
When the program runs, the data table and positioning path are as shown below.

Note:
The linear interpolation function can be used in the combination of (ch0 and ch1) or (ch2 and ch3).

●Positioning data table

DT500 DT501	Control code	: H 1000	*1
DT502 DT503	Composite speed (Initial speed)	: 500 Hz	*2
DT504 DT505	Composite speed (Max. speed)	: 5000 Hz	*2
DT506 DT507	Acceleration/ Deceleration speed	: 300 ms	*3
DT508 DT509	Target value (X-axis CH0)	: 5000 pulses	*4
DT510 DT511	Target value (Y-axis CH1)	: 2000 pulses	*4
DT512 DT513	X-axis (CH0) component speed (Initial speed)		*5
DT514 DT515	X-axis (CH0) component speed (Max. speed)		
DT516 DT517	Y-axis (CH1) component speed (Initial speed)		
DT518 DT519	Y-axis (CH1) component speed (Max. speed)		
DT520	X-axis (CH0) frequency range		*6
DT521	Y-axis (CH1) frequency range		
DT522	X-axis (CH0) number of acceleration/deceleration steps		*7
DT523	Y-axis (CH1) number of acceleration/deceleration steps		

Setting area
Designated with user program

Operation result storage area
Parameters for each axis component, calculated due to instruction execution, are stored here.

●Positioning path

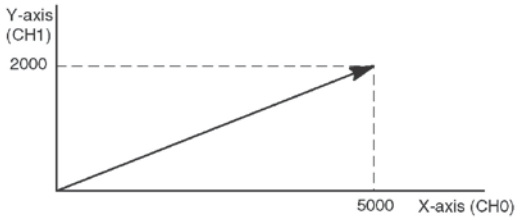

(*1) : Control code <H constant> H □□□□□□□□

S+1 S

0 : Fixed

■Duty (on width)
0 : Duty 1/2 (50%)
1 : Duty 1/4 (25%)

0 : Fixed

■Operation mode and output method
00 : Incremental CW/CCW
02 : Incremental pulse and direction (forward off/reverse on)
03 : Incremental pulse and direction (forward on/reverse off)
10 : Absolute CW/CCW
12 : Absolute pulse and direction (forward off/reverse on)
13 : Absolute pulse and direction (forward on/reverse off)

(*2) : Composite speed (Initial speed, Max. speed) (Hz) <K constant>
1.5 Hz to 100 kHz [K1 to K100000]
However, 1.5 Hz is for an angle of 0 deg or 90 deg only.
Also, specify "K1" when specifying 1.5 Hz.

- If the component speed drops lower than the minimum speed for each frequency range, then the speed will become the corrected component speed, so be careful. (See ※6)
- When simultaneously using a high-speed counter, periodical interrupt or PLC link, do no set to 60 kHz or higher.
- If initial speed is set equal to maximum speed, pulses will be output with no acceleration/deceleration.
  Composite speed (Initial speed): 30 kHz or less
- Specify composite speed to make the component speed of each axis become1.5 Hz or higher.
- However, for the medium-speed channels CH2 and CH3 of the Tr type, it can be set to a maximum of K20000 Hz.

Ramco National www.PanasonicSensors.com 1-800-280-6933

(*3): Acceleration/Deceleration time (ms) <K constant>
K0 to K32767
If this is 0, pulses will be output for the initial speed composite speed) as is, with no acceleration/deceleration

(*4): Target value (Movement amount)
K-8388608 to K8388607
Infinite feeding is not available.
When operating only one axis,
a) In incremental mode, set the target value for the axis which will be not be operated.
b) In absolute mode, set the target value for the axis which will not be operated the same as the current value.
Infinite feeding is not available during the linear interpolation control.

(*5): Component speed (Initial speed and max. speed of each axis)
This is stored as 2 words in real numbers type.

$$\text{X-axis component speed} = \frac{(\text{composite speed}) \times (\text{X-axis movement amount})}{\sqrt{((\text{X-axis movement amount})^2+(\text{Y-axis movement amount})^2)}}$$

$$\text{Y-axis component speed} = \frac{(\text{composite speed}) \times (\text{Y-axis movement amount})}{\sqrt{((\text{X-axis movement amount})^2+(\text{Y-axis movement amount})^2)}}$$

Composite speed (Initial speed): Set to 30kHz or less.

Example) Even if the initial speed is corrected (see ※6), the calculation value will be stored as is in the operation result storage area.

(*6): Frequency range
The system automatically selects the frequency range for each component of each axis.
Range 0: 1.5 Hz to 9.8 kHz
Range 1: 48 Hz to 100 kHz
Range 2: 191 Hz to 100 kHz
a) If maximum speed ≦ 9800 Hz
If initial speed < 1.5 Hz, initial speed is corrected to 1.5 Hz, and range 0 is selected.
If initial speed ≧ 1.5 Hz, range 0 is selected.
b) If 9800 Hz < maximum speed ≦ 100000 Hz,
If initial speed < 48 Hz, initial speed is corrected to 48 Hz, and range 0 is selected.
If 48 Hz ≦ initial speed < 191 Hz, range 1 is selected.
If initial speed ≧ 191 Hz, range 2 is selected.

(*7): Number of acceleration/deceleration steps
The system automatically calculates the number of acceleration/decelaration steps in the range 0 to 60 steps.
- If the oepration result is 0, pulses are output for the initial speed (composite speed) as is, with no acceleration/deceleration.
- The number of acceleration/deceleration steps is found using the formula: acceleration/deceleration time (ms) × component initial speed (Hz)

Example)
With incremental, initial speed 300 Hz, max. speed 5 kHz, acceleration/deceleration time 0.5 s, CH0 target value 1000, CH1 target value 50

$$\text{CH0 componet initial speed} = \frac{300 \times 1000}{\sqrt{(1000^2 + 50^2)}} = 299.626 \text{ Hz}$$

$$\text{CH1 componet initial speed} = \frac{300 \times 50}{\sqrt{(1000^2 + 50^2)}} = 14.981 \text{ Hz}$$

CH0 number of acceleration/deceleration steps
$= 500 \times 10^{-3} \times 299.626 \fallingdotseq 147.8$ ⇨ 60 steps
CH1 number of acceleration/deceleration steps
$= 500 \times 10^{-3} \times 14.981 \fallingdotseq 7.4$ ⇨ 7 steps

Note) Precaution for the specification of composite speed (initial speed)
If each component speed (initial speed) of CH0 and CH1 which is calculated using the following formula is not 1.5 kHz or higher, the path may not be linear.

$$f \geqq \frac{1.5\sqrt{\ (\Delta\chi 2+\Delta y 2)}}{\Delta\chi}$$

$\Delta\chi$: CH of which distance betwen the target value and the current value is short.
Δy : CH of which distance betwen the target value and the current value is long.

Ramco National www.PanasonicSensors.com 1-800-280-6933

Sample program of interpolation control
Wiring example

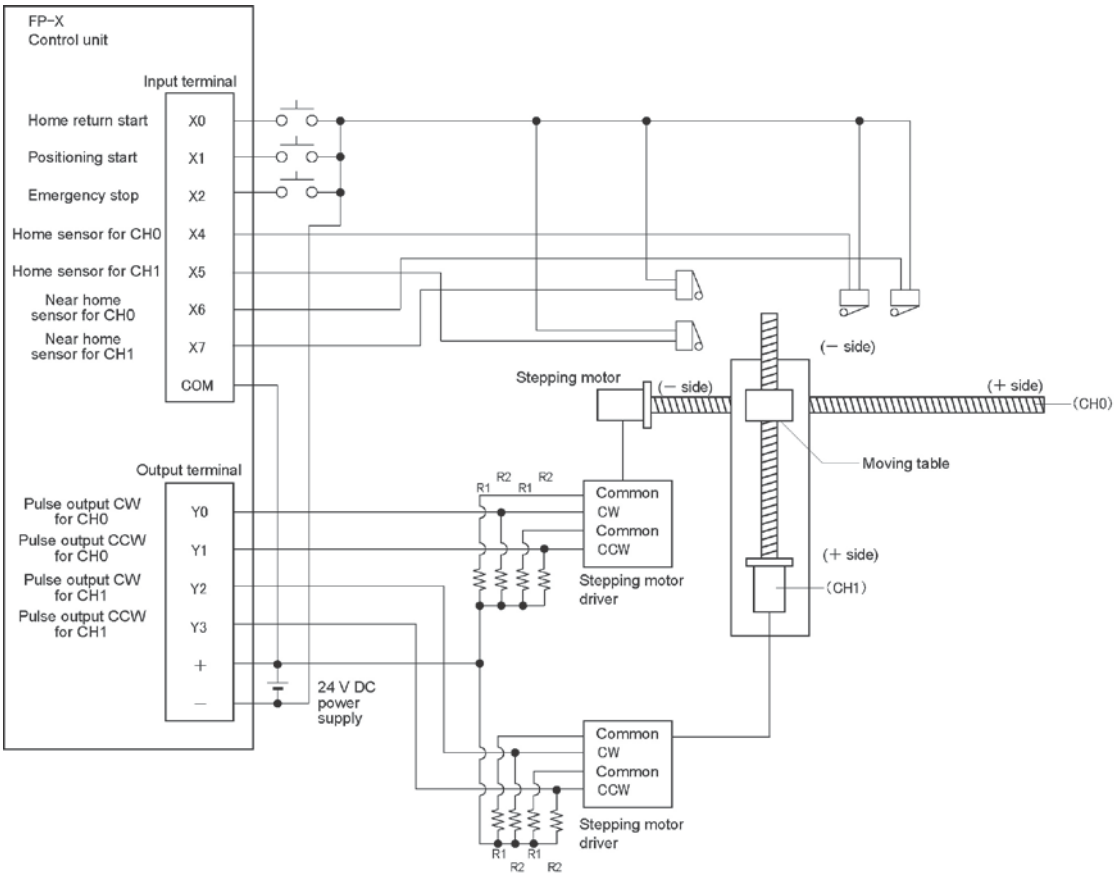

Note) When the stepping motor input is a 5 V optical coupler type, connect a 2 kΩ (1/2 W) resistor with the R1 and a 2 kΩ (1/2 W) to 470 Ω (2 W) resistor with the R2.

Table of I/O allocation

I/O No.	Description	
X0	Home return start signal	
X1	Positioning start	
X2	Emergency stop	
X6	Near home sensor	CH0
X4	Home sensor	
Y0	Pulse output CW	
Y1	Pulse output CCW	
X7	Near home sensor	CH1
X5	Home sensor	
Y2	Pulse output CW	
Y3	Pulse output CCW	

Ramco National www.PanasonicSensors.com 1-800-280-6933

Restrictions on positioning data setting

- Designate settings for the target position and moving amount so they are within the following range. Allowable range: -8,388,608 to +8,388,608
- When using in combination with other positioning instructions like F171, designate so the target value is within the above range, even in those instructions.

Sample program

Continuous interpolation control

- Using the linear interpolation function, perform positioning control that draws trajectory like the one shown below.

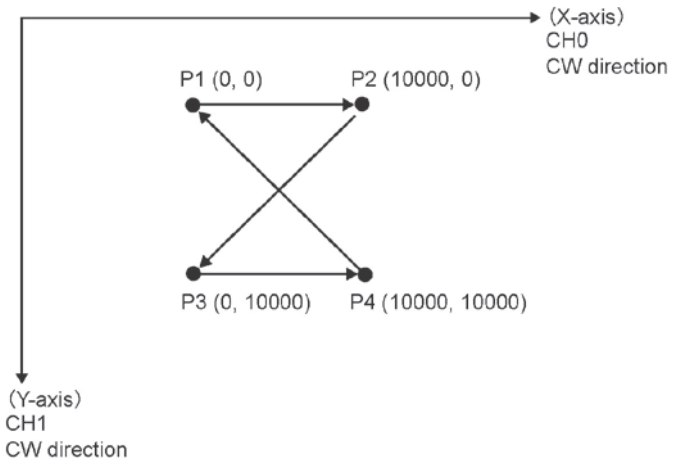

Relay allocation

Relay No.	Description	Relay No.	Description
X1	Positioning start	**R9010**	Always ON
X2	Emergency stop switch	**R911C**	Pulse output flag (CH0)
R20	From P1 to P2 start	**R911D**	Pulse output flag (CH1)
R21	From P2 to P3 start		
R22	From P3 to P4 start		
R23	From P4 to P1 start		
R2F	Positioning done		

Data register allocation

Item	Data register No.	Details	On this program details
User setting area for linear interpolation	DT0 to DT1	Control code	Control code when executing linear interpolation, absolute
	DT2 to DT3	Startup speed	2000 Hz
	DT4 to DT5	Target speed	2000 Hz
	DT6	Acceleration/de-celeration time	0 ms
	DT8 to DT9	Target position (X-axis)	Specify the target position of X-axis when moving from P1 → P2 → P3 → P4 → P1.
	DT10 to DT11	Target position (Y-axis)	Specify the target position of Y-axis when moving from P1 → P2 → P3 → P4 → P1.
Work area	DT12 to DT23	Operation result storage area	Parameters calculated due to instruction execution are stored.

Ramco National www.PanasonicSensors.com 1-800-280-6933

Program

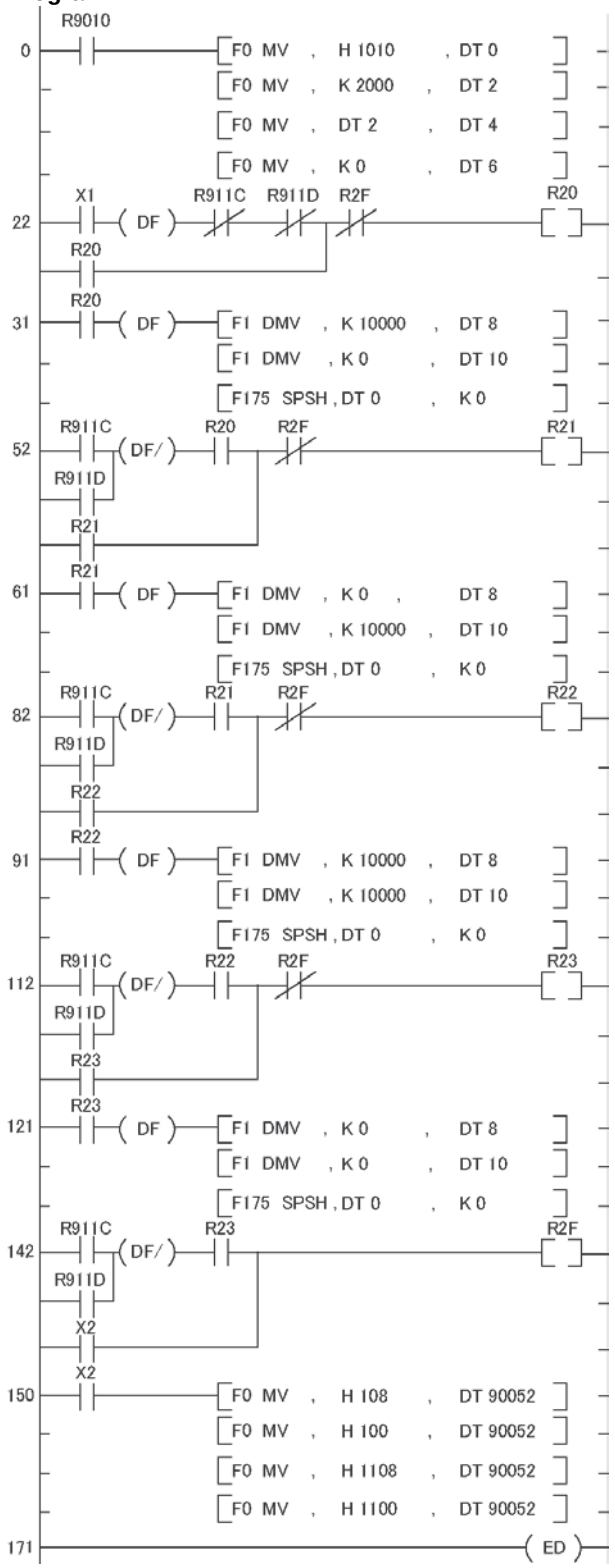

Ramco National www.PanasonicSensors.com 1-800-280-6933

Home return operation (Minus direction)

When X0 turns on, the pulse is output from CCW output Y1 of the specified channel CH0 and CCW output Y3 of the specified channel CH1, and the return to home begins.

In CH0, when X6 turns on, deceleration begins, and when X4 turns on, home return is completed. After the return to home is completed, the elapsed value areas DT90348 and DT90349 are cleared to 0.

In CH1, when X7 turns on, deceleration begins, and when X5 turns on, home return is completed. After the return to home is completed, the elapsed value areas DT90352 and DT90353 are cleared to 0.

When the operations in both CHs is completed, the return to home completes.

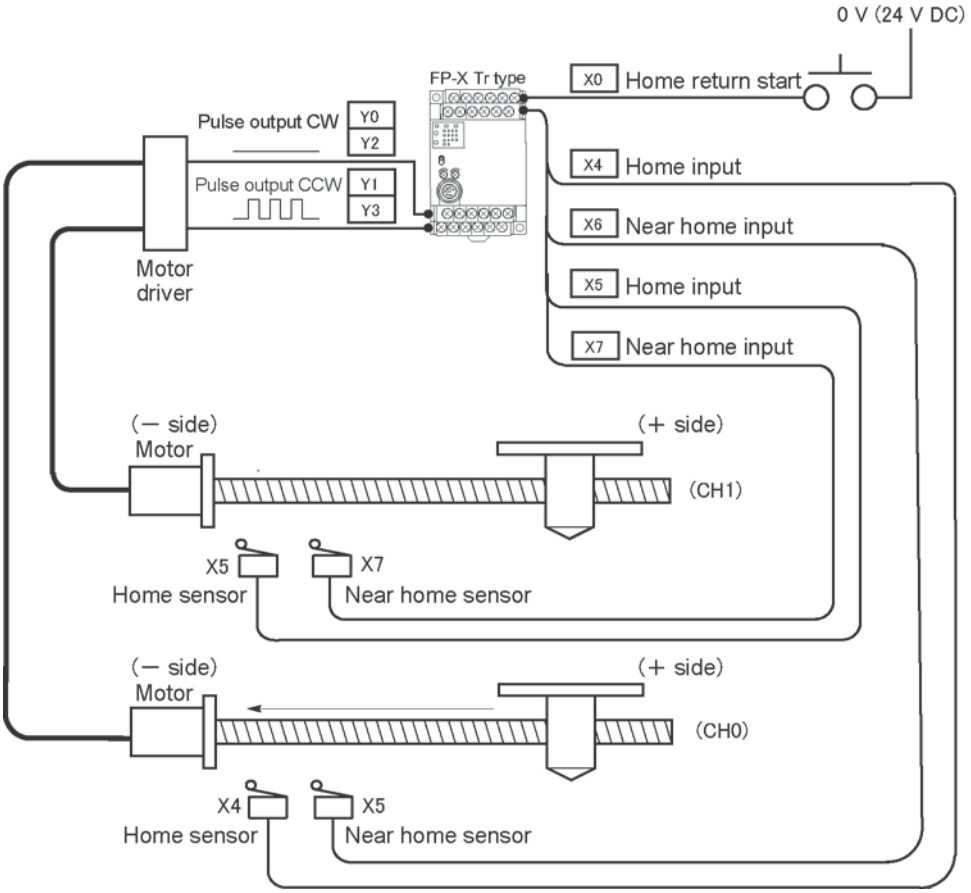

Ramco National www.PanasonicSensors.com 1-800-280-6933

Program

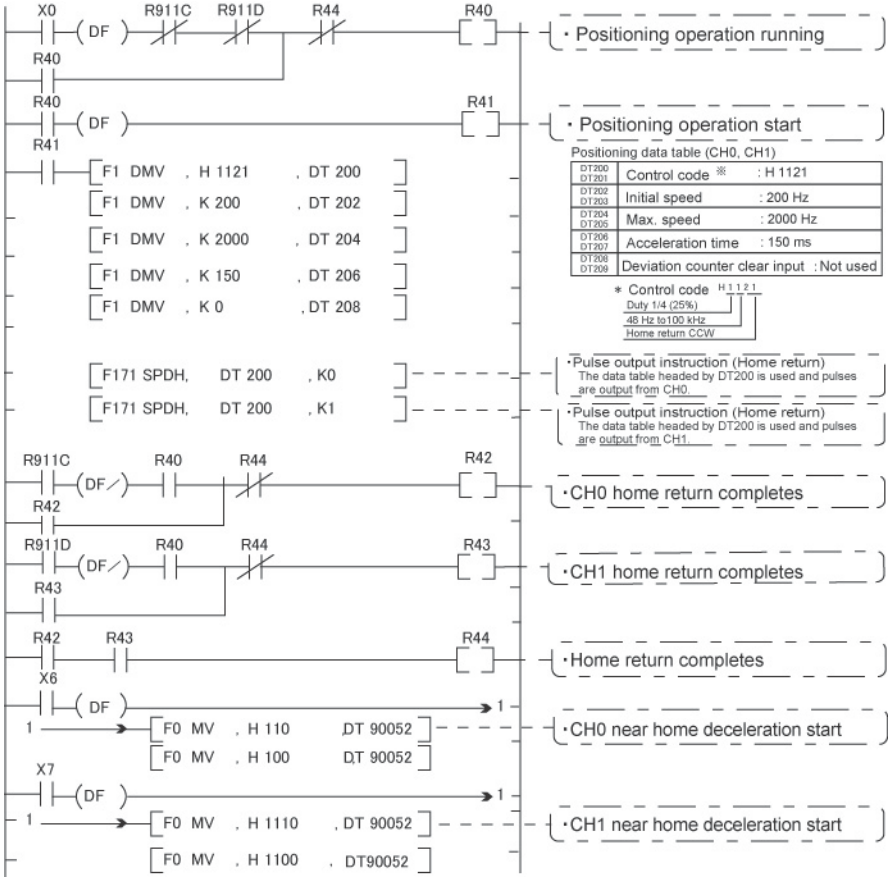

Key Point:

As there is not interpolation function for the home return, the home return should be executed for each channel. After the home return for both channels is completed, the positioning operation running program (R40) turns off.

Pulse output diagram

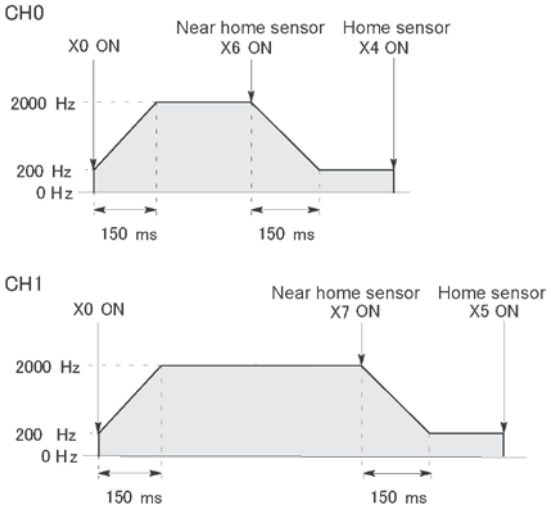

Ramco National www.PanasonicSensors.com 1-800-280-6933

9.5 PWM Output Function (Pulse I/O Cassette)

9.5.1 Overview of PWM Output Function

PWM output function

With the F173 (PWMH) instruction, the pulse width modulation output of the specified duty ratio is obtained.

System register setting

When using the PWM output function, set the channel corresponding to the system register 402 to "PWM output".

Note:

The pulse I/O cassette (AFPX-PLS) cannot be used with the FP-X Tr type.

9.5.2 Instruction to be Used for PWM Output Function

PWM Output Instruction F173

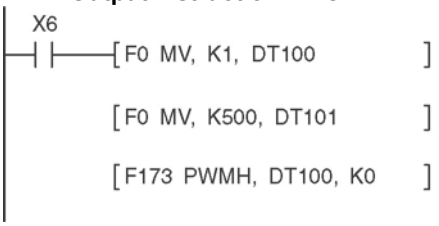

While X6 is in the on state, a pulse with a period of 502.5 ms and duty ratio of 50% is output from Y0 of specified channel "CH0". When the program runs, the data table will be as shown below.

Data table

DT100	Control code *1	: K1
DT101	Duty *2	: 50%

***1: Specify the control code by setting the K constant.**

Resolution of 1000

K	Frequency (Hz)	Period (ms)
K0	1.5	666.67
K1	2.0	502.51
K2	4.1	245.70
K3	6.1	163.93
K4	8.1	122.85
K5	9.8	102.35
K6	19.5	51.20
K7	48.8	20.48
K8	97.7	10.24
K9	201.6	4.96
K10	403.2	2.48
K11	500.0	2.00
K12	694.4	1.44
K13	1.0 k	0.96
K14	1.3 k	0.80
K15	1.6 k	0.64
K16	2.1 k	0.48
K17	3.1 k	0.32
K18	6.3 k	0.16
K19	12.5 k	0.08

Resolution of 100

K	Frequency (Hz)	Period (ms)
K20	15.6 k	0.06
K21	20.8 k	0.05
K22	25.0 k	0.04
K23	31.3 k	0.03
K24	41.7 k	0.02

However, for the medium-speed channel CH2 and CH3 of the Tr type, it is not possible to specify from K21 to k24.

Ramco National www.PanasonicSensors.com 1-800-280-6933

***2: specification of duty (specify using K constant)**
If the control code is K0 to K19, the duty is K0 to K999 (0.0% to 99.9%).

If the control code is K20 to K24, the duty is K0 to K990 (0% to 99%).
Values are specified in units of 1% (K10) (digits behind the decimal point are rounded off).

Note:

- If a value outside the specified range is written to the duty area while the instruction is being executed, a frequency corrected to the maximum value is output. If written when instruction execution is started, an operation error is occurred.

Ramco National www.PanasonicSensors.com 1-800-280-6933

Chapter 10

High-speed counter, Pulse Output and PWM Output functions (For Ry Type)

10.1 Overview of Each Functions

Describes the functions of the relay type (Ry type) FP-X control unit.

10.1.1 Usable Units and Cassettes

1. The pulse input can be counted using the inputs X0 to X7 of the main unit (Single-phase 8 channels, 2-phase 4 channels)
2. The pulse input can be counted (high-speed counter) or the pulse output and PWM output can be carried out using the pulse I/O cassette (AFPX-PLS).
   Single-phase 2-channel or 2-phase 1-channel pulse count can be carried out for one pulse I/O cassette (AFPX-PLS). Also, 1-ch pulse output is available.
   Using the pulse I/O cassette enables the count of the faster pulse than the input of the main unit.

Restrictions on the pulse I/O functions of each control unit

		C14 Ry type	C30 Ry type	C60 Ry type
Input of main unit X0 to X7		A	A	A
Input and output of Pulse I/O cassette (AFPX-PLS)	Cassette mounting part 1	A	A	A
	Cassette mounting part 2	N/A	A	A

A: Available, N/A: Not available

10.1.2 Three Pulse I/O Functions

There are three pulse I/O functions built into the FP-X Ry type

High-speed counter function (Control unit/Pulse I/O cassette)

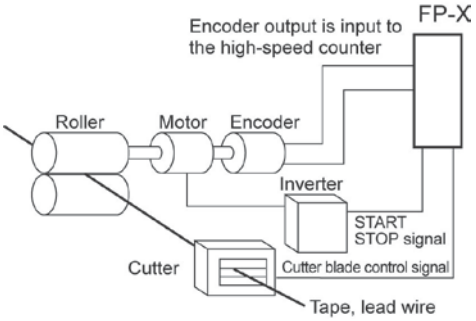

The high-speed counter function counts external inputs such as those from sensors or encoders. When the count reaches the target value, this function turns on/off the desired output.

Pulse output function (Pulse I/O cassette)

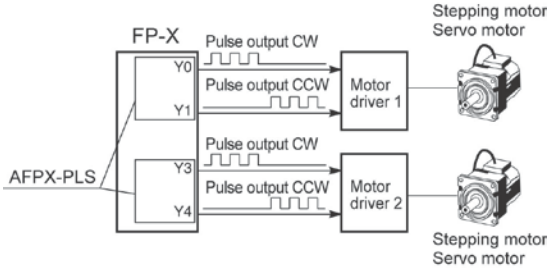

Combined with a commercially available motor driver, the function enables positioning control. With the exclusive instruction, you can perform trapezoidal control, home return, and JOG operation.

Ramco National www.PanasonicSensors.com 1-800-280-6933

PWM output function (Pulse I/O cassette)

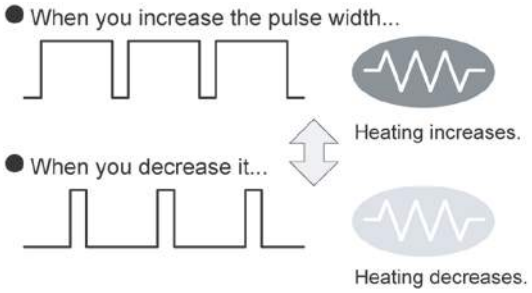

By using the exclusive instruction, the PWM output function enables a pulse output of the desired duty ratio.

10.1.3 Performance of Pulse I/O Function

Number of Channel

		High-speed counter	Pulse output
Built in Control unit		Single-phase 8 channels or 2-phase 4 channels	None
Pulse I/O cassette (AFPX-PLS)	**When using C30/C60** Note1)	Max. single-phase 4 channels and 2-phase 2 channels	Max. 2 channels
	When using C14 Note1)	Single-phase 2 channels or 2-phase 1 channel	1 channel

Note) When one unit is added for C14, and 2 units are added for C30 and C60.

Counting range

- K-2, 147, 483, 648 to K+2, 147, 483, 647 (Coded 32-bit binary)
- The built-in high-speed counter is a ring counter. Consequently, if the counted value exceeds the maximum value, it returns to the minimum value. Similarly, if the counted value drops below the minimum value, it goes back to the maximum value and continues counting from there.

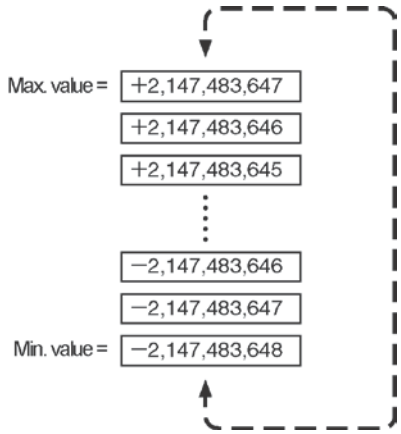

Note:

When the linear interpolation instruction F175 is used, the value for the amount of travel should be set so that it is within the range indicated below.

-8,388,608 to +8,388,607 (Coded 24-bit binary)

Ramco National www.PanasonicSensors.com 1-800-280-6933

10.2 Function Specifications and Restricted Items

10.2.1 Specifications

High-speed counter function

High-speed counter by the input of the main unit

Channel No.		Input contact	Memory area being used			Performance specifications	
			Control flag	Elapsed value area	Target value area	Minimum input pulse width Note1)	Maximum counting speed Note2)
[Single phase] Incremental, Decremental	CH0	X0	R9110	DT90300 DT90301	DT90302 DT90303	50 μs	10 kHz
	CH1	X1	R9111	DT90304 DT90305	DT90306 DT90307		
	CH2	X2	R9112	DT90308 DT90309	DT90310 DT90311		
	CH3	X3	R9113	DT90312 DT90313	DT90314 DT90315		
	CH4	X4	R9114	DT90316 DT90317	DT90318 DT90319		
	CH5	X5	R9115	DT90320 DT90321	DT90322 DT90323		
	CH6	X6	R9116	DT90324 DT90325	DT90326 DT90327		
	CH7	X7	R9117	DT90328 DT90329	DT90330 DT90331		
[2-phase] 2-phase input One input	CH0	X0 X1	R9110	DT90300 DT90301	DT90302 DT90303	100 μs	5 kHz
	CH2	X2 X3	R9112	DT90308 DT90309	DT90310 DT90311		
	CH4	X4 X5	R9114	DT90316 DT90317	DT90318 DT90319		
	CH6	X6 X7	R9116	DT90324 DT90325	DT90326 DT90327		

Related instructions:

F0(MV) :High-speed counter control

F1(DMV) :Read/write of elapsed value of high-speed counter

F166(HC1S) :Target value match on

F167(CH1R) :Target value match off

Note1) **Reference**: For information on minimum input pulse width, <10.3.3 Minimum Input Pulse Width>.

Note2) When using the high-speed counter of the main unit only

Ramco National www.PanasonicSensors.com 1-800-280-6933

High-speed counter when using pulse I/O cassette (AFPX-PLS)

Channel No.		Input contact Note1)	Memory area being used			Performance specifications	
			Control flag	Elapsed value area	Target value area	Minimum input pulse width Note2)	Maximum counting speed
[Single phase] Incremental, Decremental	CH8	X100 (X102)	R9118	DT90332 DT90333	DT90334 DT90335	6.25 μs (100 μs)	Single-phase 2 channels: 80 kHz Single-phase 4 channels: 50 kHz
	CH9	X101 (X102)	R9119	DT90336 DT90337	DT90338 DT90339		
	CHA Note4)	X200 (X202)	R911A	DT90340 DT90341	DT90342 DT90343		
	CHB Note4)	X201 (X202)	R911B	DT90344 DT90345	DT90346 DT90347		
[2-phase] 2-phase input One input Direction distinction	CH8	X100 X101 (X102)	R9118	DT90332 DT90333	DT90334 DT90335	16.7 μs (100 μs)	2-phase 1 channel: 30 kHz 2-phase 2 channels: 25 kHz
	CHA Note4)	X200 X201 (X202)	R911A	DT90340 DT90341	DT90342 DT90343		

Related instructions:

F0(MV) :High-speed counter control
F1(DMV) :Read/write of elapsed value of high-speed counter
F166(HC1S) :Target value match on
F167(CH1R) :Target value match off

Note1) The values in parentheses are for the reset input. The reset input X102 can be set to either CH8 or CH9. The reset input X202 can be set to either CHA or CHB.

Note2) **Reference**: For information on minimum input pulse width, <10.3.3 Minimum Input Pulse Width>.

Note3) When using the AFPX-PLS only

Note4) CHA/CHB can be used when 2 units of AFPX-PLS are installed.

Ramco National www.PanasonicSensors.com 1-800-280-6933

Pulse output function

Pulse output when using pulse I/O cassette (AFPX-PLS)

High-speed counter channel No.		Input/output contact number used					Memory area used		
		CW or pulse output	CCW or direction output	Deviation counter clear output	Home input	Near home input Note3)	Control flag	Elapsed value area	Target value area
Independence	CH0	Y100	Y101	Y102	X102	DT90052 <bit4>	R911C	DT90348 DT90349	DT90350 DT90351
	CH1	Y200	Y201	Y202	X202	DT90052 <bit4>	R911D	DT90352 DT90353	DT90354 DT90355
Interpolation	Linear	Y100 Y200	Y101 Y201	Y102 Y202 Note1)	X102 X202 Note1)	DT90052 <bit4>	R911C R911D	DT90348 DT90349 DT90352 DT90353	DT90350 DT90351 DT90354 DT90355

Max. output frequency Note3)
- Using one ch: Max. 100 kHz
- Using two chs: Max. 80 kHz

Related instructions
F0 (MV) :high-speed counter control
F1 (DMV) :Read/write of elapsed value of high-speed counter
F171 (SPDH) :trapezoidal control/home return
F172 (PLSH) :JOG operation
F174 (SP0H) :Data table control
F175 (SPSH) :Linear interpolation control

Note1) The home return operation of the interpolation axes should be performed for every channel.

Note2) **Reference**: For DT90052, see <10.4.4 Pulse Output Control Instruction (F0) (F1)>.

Note3) When using the AFPX-PLS only

PWM output function

PWM output when using pulse I/O cassette (AFPX-PLS)

High-speed counter channel No.	Output contact No. used	Memory area used	Output frequency (duty)	Related instructions
		Control flag		
CH0	Y100	R911C	-When resolution = 1000, 1.5 Hz to 12.5 kHz (0.0 to 99.9%)	F0(MV) (High-speed counter control) F1(DMV) (Read/write of elapsed value of high-speed counter) F173(PWMH) (PWM output)
CH1	Y200	R911D	-When resolution = 100, 15.6 kHz to 41.7 kHz (0 to 99%)	

Ramco National www.PanasonicSensors.com 1-800-280-6933

10.2.2 Functions Used and Restrictions

High-speed counter built in the control unit

2-phase		Single-phase	
No. of channels	**Max. frequency**	**No. of channels**	**Max. frequency**
0	–	1	10 kHz
0	–	2	10 kHz
0	–	3	10 kHz
0	–	4	10 kHz
0	–	5	10 kHz
0	–	6	10 kHz
0	–	7	10 kHz
0	–	8	10 kHz
1	5 kHz	0	10 kHz
1	5 kHz	1	10 kHz
1	5 kHz	2	10 kHz
1	5 kHz	3	10 kHz
1	5 kHz	4	10 kHz
1	5 kHz	5	10 kHz
1	5 kHz	6	10 kHz
2	5 kHz	0	10 kHz
2	5 kHz	1	10 kHz
2	5 kHz	2	10 kHz
2	5 kHz	3	10 kHz
2	5 kHz	4	10 kHz
3	5 kHz	0	10 kHz
3	5 kHz	1	10 kHz
3	5 kHz	2	10 kHz
4	5 kHz	0	–

Pulse I/O set (AFPX-PLS) high-speed counter

2-phase		Single-phase	
No. of channels	**Max. frequency**	**No. of channels**	**Max. frequency**
0	–	1	80 kHz
0	–	2	80 kHz
0	–	3	50 kHz
0	–	4	50 kHz
1	30 kHz	0	–
1	30 kHz	1	50 kHz
1	30 kHz	2	50 kHz
2	25 kHz	0	–

Conditions: When the duty is 50%, and the match on/off instruction is not used.

Ramco National www.PanasonicSensors.com 1-800-280-6933

Restrictions on I/O allocations

- Various functions listed in the table of specifications cannot be allocated to one I/O at the same time.
- Except for the examples noted below, inputs and outputs that have been allocated to the various functions cannot be allocated as normal inputs and outputs.

Exceptional cases (AFPX-PLS)

Example 1:

If no reset input is used in the high-speed counter function, X102 and X202 can be used as normal inputs.

Example 2:

If no output is used to clear the differential counter in the pulse output function, Y102 and Y202 can be used as normal outputs.

Restrictions on the execution of related instructions (F166 to F175)

- If an instruction related to the high-speed counter “F166 to F175” is executed, the control flag (special internal relay: R9110 to R911D) corresponding to the channel used turns on.
- Please be aware that the control flag “in progress” may change while a scan is being carried out. To prevent multiple read access to this special internal relay, you should generate a copy of it at the beginning of the program.
- When the control flag for a channel turns on, another instruction using that same channel cannot be executed.

10.2.3 Booting Time

The booting time is the time span from the execution of the instruction to the actual pulse output.

Type of instruction	Booting time	
Pulse output instruction F171 (SPDH) Trapezoidal control/home return	CW/CCW is set :	Approx. 200 μs (with 30 steps) Approx. 400 μs (with 60 steps)
	Pulse/direction is set :	Approx. 500 μs (with 30 steps) Note) Approx. 700 μs (with 60 steps) Note)
Pulse output instruction F172 (PLSH) JOG operation	CW/CCW is set : Pulse/direction is set :	Approx. 20 μs Approx. 320 μs Note)
Pulse output instruction F174 (SP0H) Data table control	CW/CCW is set : Pulse/direction is set :	Approx. 30 μs Approx. 330 μs Note)
PWM output instruction F173 (PWMH)	Approx. 30 μs	

Note) If pulse/direction is set, a waiting time (approx. 300 μs) is included from the time that the direction output goes on until the pulse output instruction can be executed.

Ramco National www.PanasonicSensors.com 1-800-280-6933

10.3 High-speed Counter Function

10.3.1 Overview of High-speed Counter Function

- The high-speed counter function counts the input signals, and when the count reaches the target value, turns on and off the desired output.
- To turn on an output when the target value is matched, use the target value match ON instruction F166 (HC1S). To turn off an output, use the target value match OFF instruction F167 (HC1R).
- Preset the output to be turned on and off with the SET/RET instruction.

Setting the system register

In order to use the high-speed counter function, it is necessary to set the system register No. 402 for the input of the main unit, and the system registers No. 400 to 401 for the pulse I/O cassette.

10.3.2 Input Modes and Count

Incremental input mode

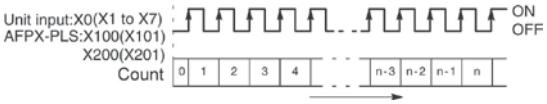

Decremental input mode

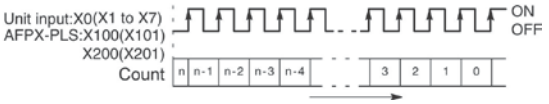

Two-phase input mode

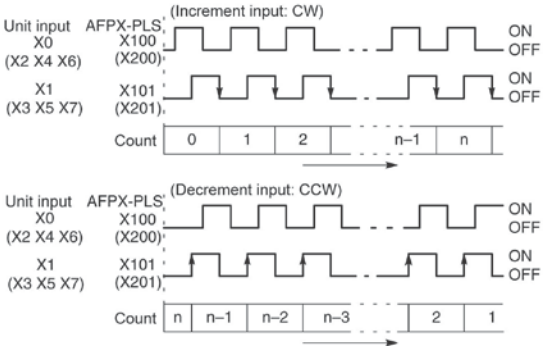

Individual input mode: only for pulse I/O cassette (Incremental/decremental input mode)

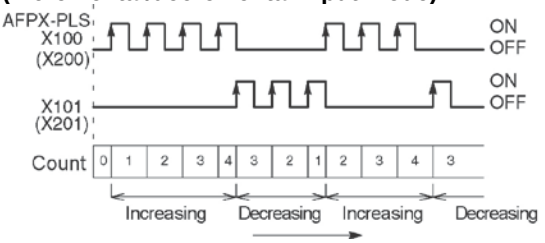

Direction discrimination: only for pulse I/O cassette

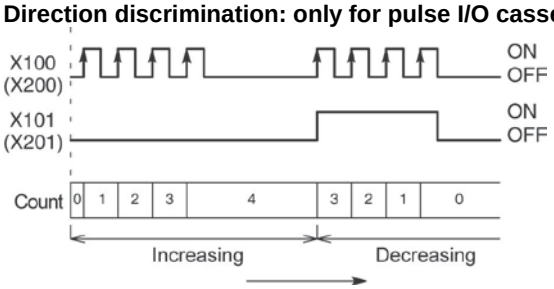

Ramco National www.PanasonicSensors.com 1-800-280-6933

Count for reset input: only for pulse I/O cassette (Incremental input mode)

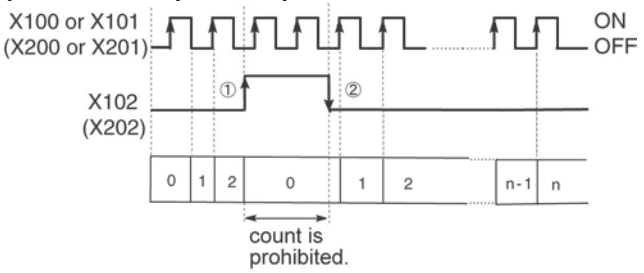

The reset input is executed by the interruption at (1) on (edge) and (2) off (edge).
(1) on (edge) … Count disable, Elapsed value clear
(2) off (edge) … Count enable
DT90052 (bit2): “able/disable” setting of the input can be set by the reset input.

10.3.3 Minimum Input Pulse Width

For the period T (1/frequency), a minimum input pulse width of T/2 (single-phase input) or T/4 (two-phase input) is required.

<Single phase>

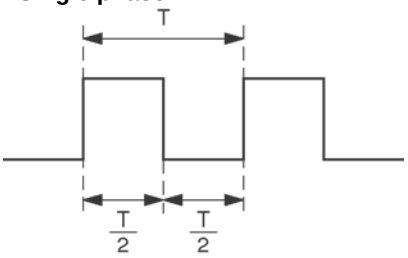

<Two-phase>

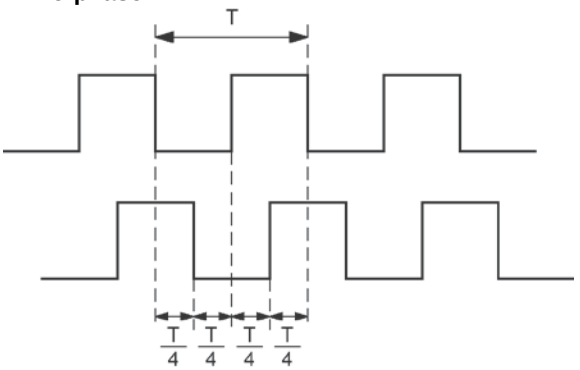

Ramco National www.PanasonicSensors.com 1-800-280-6933

10.3.4 I/O Allocation

- As shown in the table of specifications, the inputs and outputs used will differ depending on the channel number being used.
- The output turned on and off can be specified with instructions F166 (HC1S) and F167 (HC1R) for desired output relays (Yn:n<300).

When using CH8 of the pulse I/O cassette with incremental input and reset input

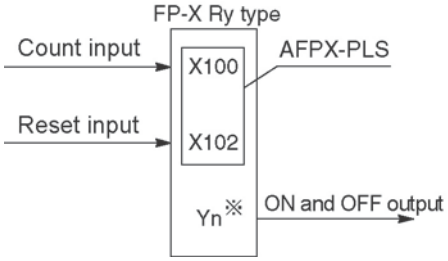

* The output turned on and off when the target value is reached can be specified as desired from the outputs of the main unit or add-on cassette.

When using CH8 of the pulse I/O cassette with two-phase input and reset input

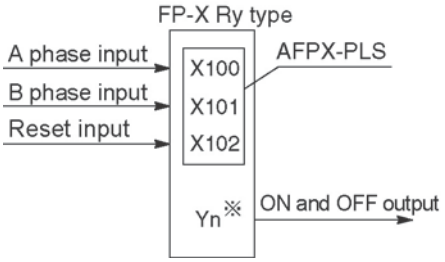

* The output turned on and off when the target value is reached can be specified as desired from the outputs of the main unit or add-on cassette.

Reference: <10.2.1 Table of Specifications>

10.3.5 Instructions used with High-speed Counter Function

High-speed counter control instruction (F0)

- This instruction is used for counter operations such as software reset and count disable.
- Specify this instruction together with the special data register DT90052.
- Once this instruction is executed, the settings will remain until this instruction is executed again.

Operations that can be performed with this instruction

- Counter software reset (bit0)
- Counting operation enable/disable (bit1)
- Hardware reset enable/disable (bit2)
- Clear high-speed counter instructions F166 to F167
- Clear target value match interrupt

Example: Performing a software reset

In case of CH0

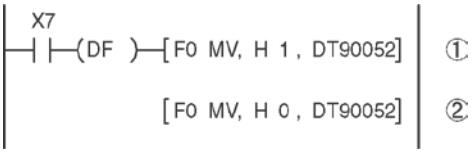

In case of CH1

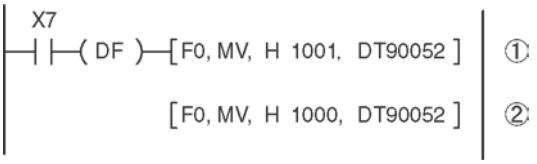

In the above program, the reset is performed in step (1) and 0 is entered just after that in step (2). The count is now ready for operation. If it is only reset, counting will not be performed.

Ramco National www.PanasonicSensors.com 1-800-280-6933

High-speed counter/pulse output control flag area of FP-X Ry type

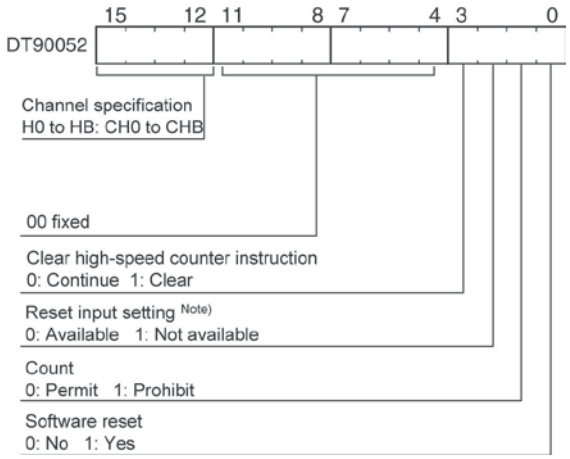

- The area DT90052 for writing channels and control codes is allocated as shown in the left figure.
- Control codes written with an F0 (MV) instruction are stored by channel in special data registers DT90360 to DT90373.

Note) In the reset input setting, the reset input (X102 or X202) allocated in the high-speed counter setting of the system registers are defined to "enable/disable".

High-speed counter control code monitor area

High-speed counter Channel No.	Control code monitor area	
	FP-X Ry type	FP-X Tr type
ch0	DT90360	DT90370
ch1	DT90361	DT90371
ch2	DT90362	DT90372
ch3	DT90363	DT90373
ch4	DT90364	DT90374
ch5	DT90365	DT90375
ch6	DT90366	DT90376
ch7	DT90367	DT90377
ch8	DT90368	-
ch9	DT90369	-
chA	DT90370	-
chB	DT90371	-

Elapsed value write and read instruction (F1)

- This instruction changes or reads the elapsed value of the high-speed counter.
- Specify this instruction together with the special data register DT90300.
- The elapsed value is stored as 32-bit data in the combined area of special data registers DT90300 and DT90301.
- Use this F1 (DMV) instruction to set the elapsed value.

Example 1: Writing the elapsed value

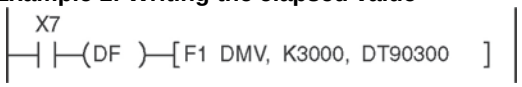

Set the initial value of K3000 in the high-speed counter.

Example 2: Reading the elapsed value

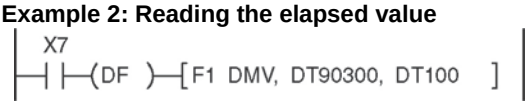

Read the elapsed value of the high-speed counter and copies it to DT100 and DT101.

Ramco National www.PanasonicSensors.com 1-800-280-6933

Target value match ON instruction (F166)

Example 1:

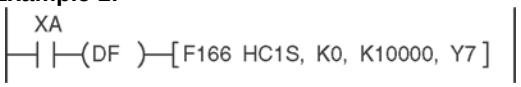

If the elapsed value (DT90300 and DT90301) for channel 0 matches K10000, output Y7 turns on.

Example 2:

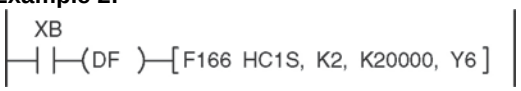

If the elapsed value (DT90308 and DT90309) for channel 2 matches K20000, output Y6 turns on.

Target value match OFF instruction (F167)

Example 1:

If the elapsed value (DT90304 and DT90305) for channel 1 matches K30000, output Y4 turns off.

Example 2:

If the elapsed value (DT90312 and DT90313) for channel 3 matches K40000, output Y5 turns off.

FP-X Ry type – Elapsed value and target value areas of high-speed counter ch0 to chB

High-speed counter Channel No.	Control flag	Elapsed value area	Target value area
ch0	R9110	DT90300 to DT90301	DT90302 to DT90303
ch1	R9111	DT90304 to DT90305	DT90304 to DT90307
ch2	R9112	DT90308 to DT90309	DT90310 to DT90311
ch3	R9113	DT90312 to DT90313	DT90314 to DT90315
ch4	R9114	DT90316 to DT90317	DT90318 to DT90319
ch5	R9115	DT90320 to DT90321	DT90322 to DT90323
ch6	R9116	DT90324 to DT90325	DT90326 to DT90327
ch7	R9117	DT90328 to DT90329	DT90330 to DT90331
ch8	R9118	DT90332 to DT90333	DT90334 to DT90335
ch9	R9119	DT90336 to DT90337	DT90338 to DT90339
chA	R911A	DT90340 to DT90341	DT90342 to DT90343
chB	R911B	DT90344 to DT90345	DT90346 to DT90347

Ramco National www.PanasonicSensors.com 1-800-280-6933

10.3.6 Sample program (Control Unit and Main Unit I/O)

Positioning operations with a single speed inverter

Wiring example

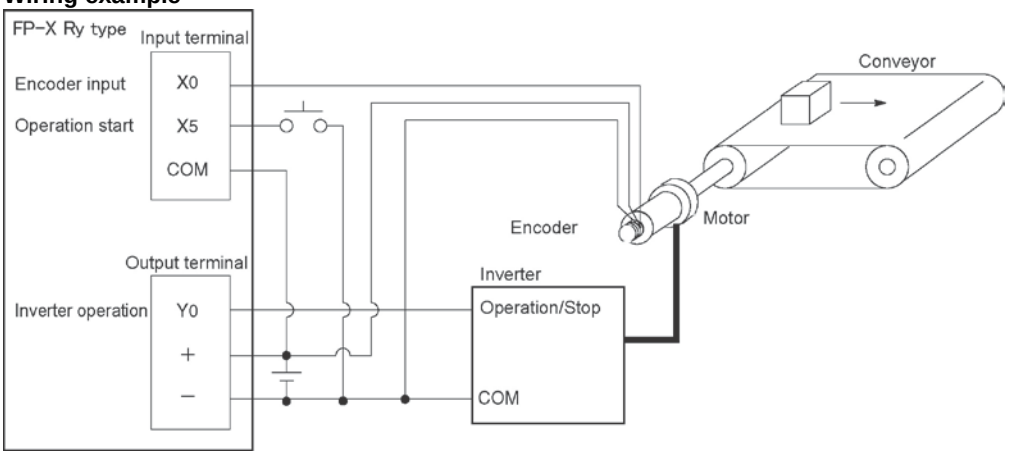

Operation chart

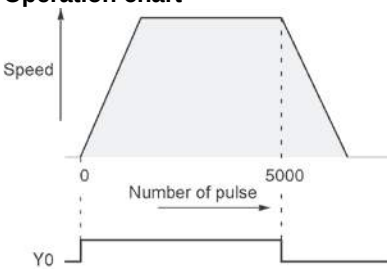

I/O allocation

I/O No.		Description
Main unit I/O	X0	Encoder input
	X5	Operation start signal
	Y0	Inverter operation signal
R100		Positioning operation running
R101		Positioning operation start
R102		Positioning done pulse
R9110		High-speed counter CH0 control flag

Program

When X5 is turned on, Y0 turns on and the conveyor begins moving. When the elapsed value (DT90300 and DT90301) reaches K5000, Y0 turns off and the conveyor stops.

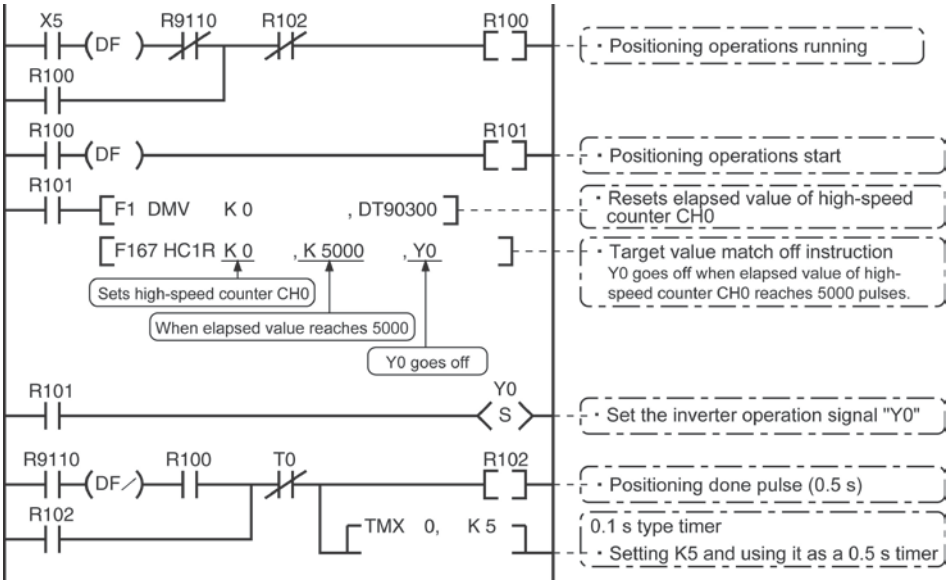

Ramco National www.PanasonicSensors.com 1-800-280-6933

Positioning operations with a double speed inverter

Wiring example

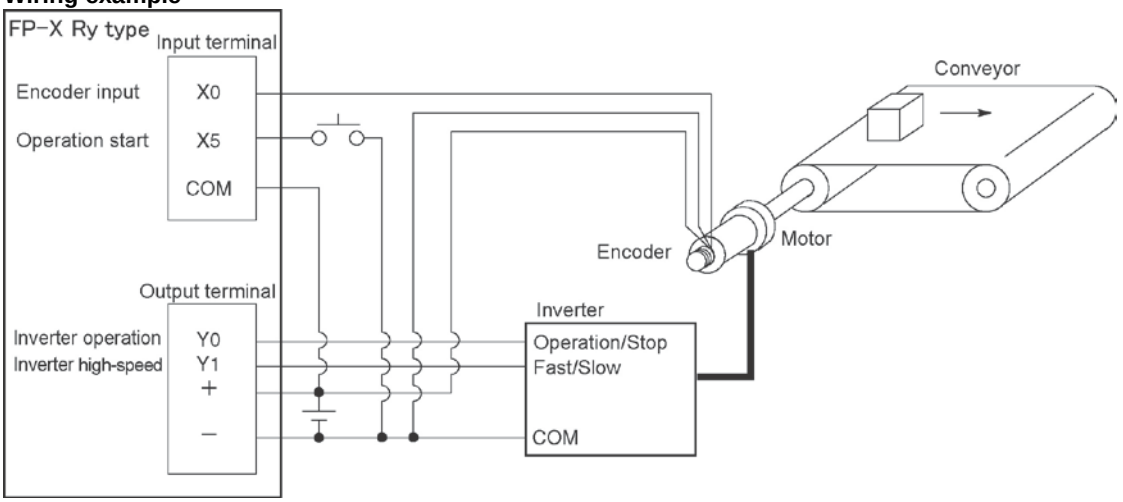

Operation chart

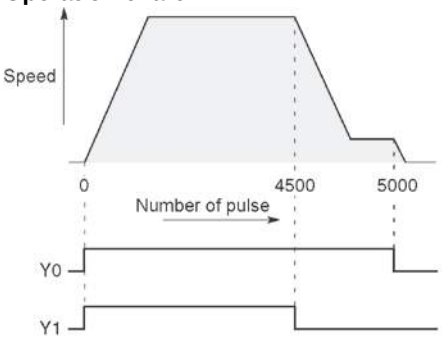

I/O allocation

I/O No.		Description
Main unit I/O	X0	Encoder input
	X5	Operation start signal
	Y0	Inverter operation signal
	Y1	Inverter high-speed signal
R100		Positioning operation running
R101		Positioning operation start
R102		Arrival at deceleration point
R103		Positioning done pulse
R900C		Comparison instruction <flag>
R9110		High-speed counter CH0 control flag

Ramco National www.PanasonicSensors.com 1-800-280-6933

Program

When X5 is turned on, Y0 and Y1 turn on and the conveyor begins moving. When the elapsed value (DT90300 and DT90301) reaches K4500, Y1 turns off and the conveyor begins decelerating. When the elapsed value reaches K5000, Y0 turns off and the conveyor stops.

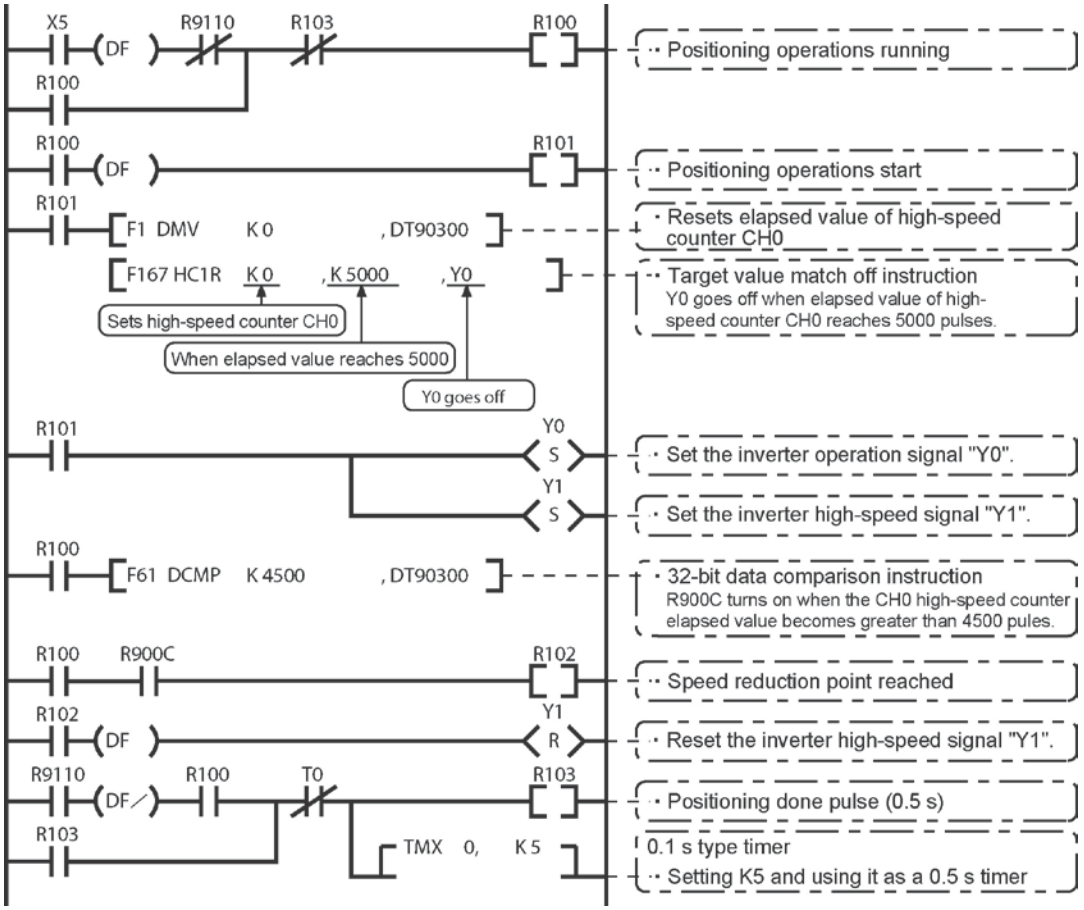

Ramco National www.PanasonicSensors.com 1-800-280-6933

10.3.7 Sample program (Pulse I/O Cassette)

Positioning operations with a single speed inverter

Wiring example

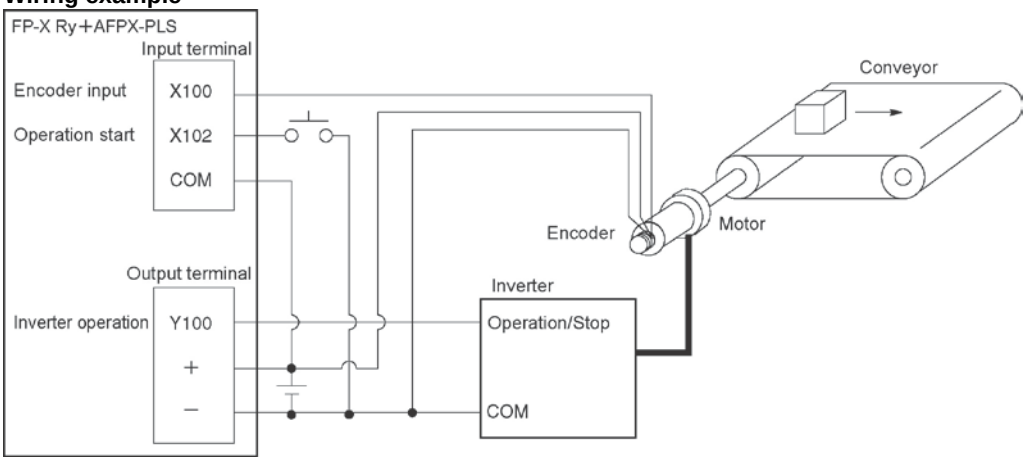

Operation chart

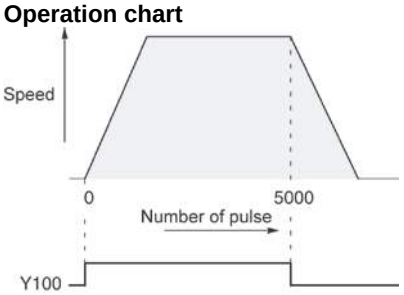

I/O allocation

I/O No.		Description
Main unit I/O	X100	Encoder input
	X102	Operation start signal
	Y100	Inverter operation signal
R100		Positioning operation running
R101		Positioning operation start
R102		Positioning done pulse
R9118		High-speed counter CH8 control flag

Program

When X102 is turned on, Y100 turns on and the conveyor begins moving. When the elapsed value (DT90332 and DT90333) reaches K5000, Y100 turns off and the conveyor stops.

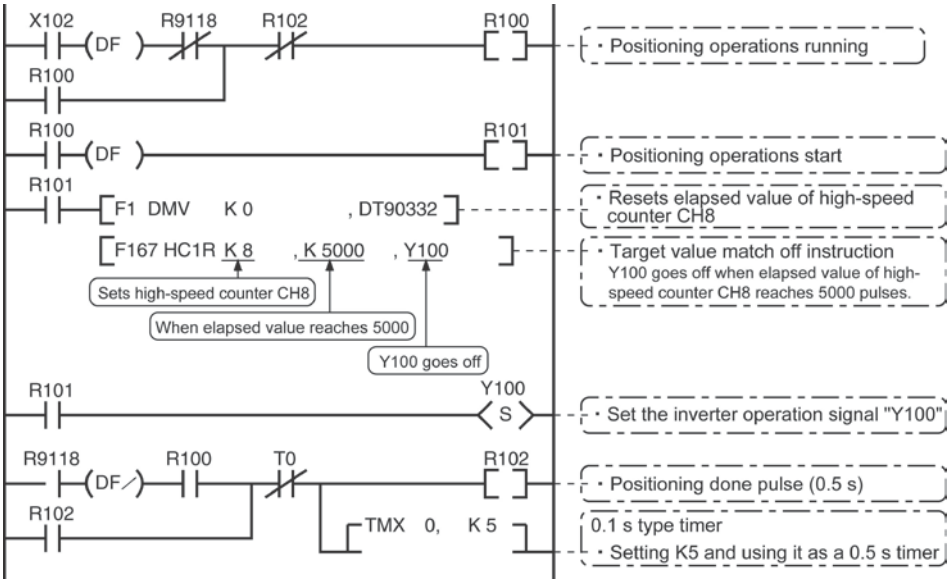

Ramco National www.PanasonicSensors.com 1-800-280-6933

Positioning operations with a double speed inverter

Wiring example

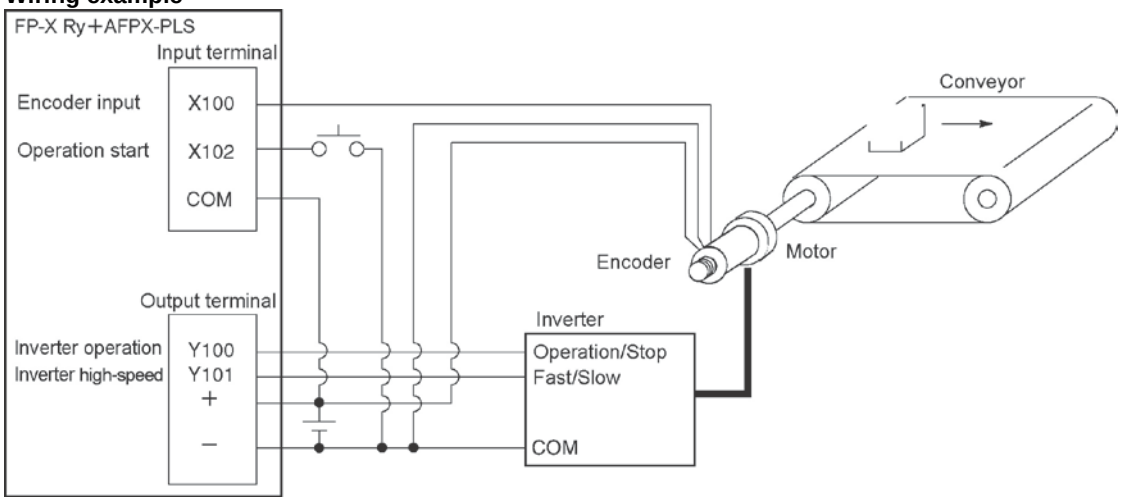

Operation chart

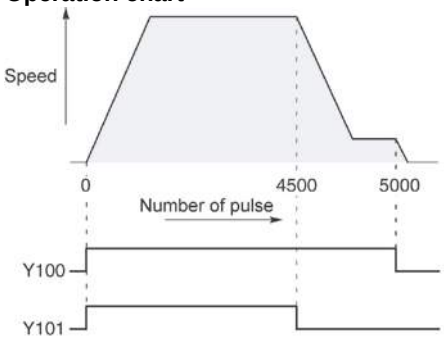

I/O allocation

I/O No.		Description
Main unit I/O	X100	Encoder input
	X102	Operation start signal
	Y100	Inverter operation signal
	Y101	Inverter high-speed signal
R100		Positioning operation running
R101		Positioning operation start
R102		Arrival at deceleration point
R103		Positioning done pulse
R900C		Comparison instruction <flag>
R9118		High-speed counter CH8 control flag

Ramco National www.PanasonicSensors.com 1-800-280-6933

Program

When X102 is turned on, Y100 and Y101 turn on and the conveyor begins moving. When the elapsed value (DT90332 and DT90333) reaches K4500, Y101 turns off and the conveyor begins decelerating. When the elapsed value reaches K5000, Y100 turns off and the conveyor stops.

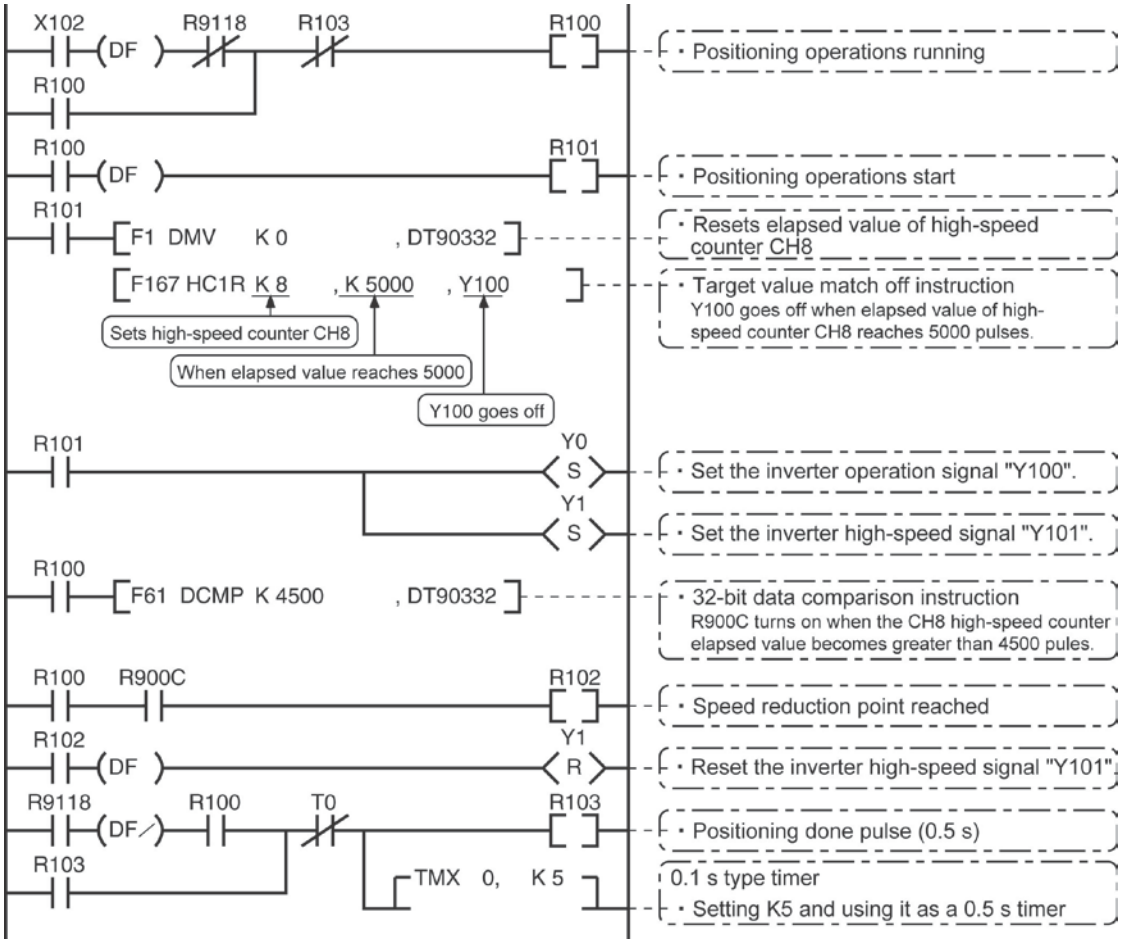

Ramco National www.PanasonicSensors.com 1-800-280-6933

10.4 Pulse Output Function (Pulse I/O Cassette)

10.4.1 Overview of Pulse Output Function

Instructions used and controls

Together with a commercially available pulse-string input type motor driver, the pulse output function can be used for positioning control.

Type of control	Exclusive instru-ction	Description	Usable cassette
Trapezoidal control	F171 (SPDH)	Provides trapezoidal (table-shaped) control for automatically obtaining pulse outputs by specifying the initial speed, maximum speed, acceleration/deceleration time and target value.	AFPX-PLS
Home return		Enables automatic home return operation.	
JOG operation	F172 (PLSH)	Causes pulses to be output as long as the execution condition is on. A target value can also be set, so that pulse output stops at the point when the target value is matched.	
Data table control	F174 (SP0H)	Enables positioning control in accordance with the data table.	
Linear interpolation	F175 (SPSH)	Enables pulses to be output using linear interpolation control, by specifying the composite speed, the acceleration/deceleration time, and the target value.	Only when using 2 units of AFPX-PLS

Note:

- With the Ry type, the pulse I/O cassette (AFPX-PLS) is necessary to use the pulse I/O function.

Setting the system register

When using the pulse output function, set the channels corresponding to system registers 400 and 401 to “Use output Y0 to 2 as pulse output” or “Use output Y0 as PWM output”.

Ramco National www.PanasonicSensors.com 1-800-280-6933

10.4.2 Types of Pulse Output Method and Operation Modes

Clockwise/counter-clockwise output method

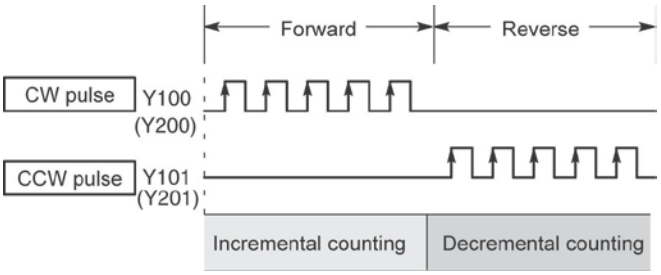

Control is carried out using two pulses: a forward rotation pulse and a reverse rotation pulse.

Pulse/direction output method (forward: OFF/reverse: ON)

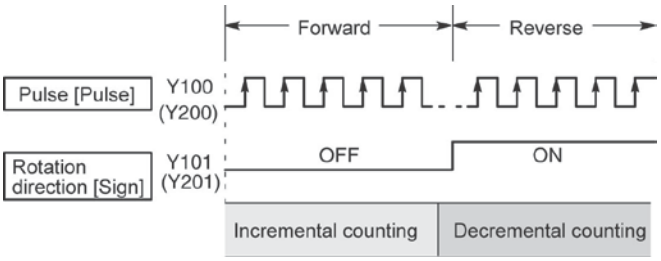

Control is carried out using one pulse output to specify the speed and another to specify the direction of rotation with on/off signals. In this mode, forward rotation is carried out when the rotation direction signal is OFF.

Pulse/direction output method (forward: ON/reverse: OFF)

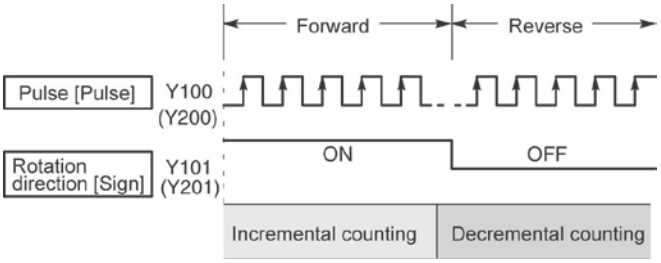

Control is carried out using one pulse output to specify the speed and another to specify the direction of rotation with on/off signals. In this mode, forward rotation is carried out when the rotation direction signal is ON.

Note:

The output signals are the numbers on the pulse I/O cassette.

When executing the pulse output, only pulses are output. The output memory Y100, Y200 and Y201is not output.

Ramco National www.PanasonicSensors.com 1-800-280-6933

Operation mode

Incremental <Relative value control>

Outputs the pulses set with the target value.

Selected Mode / Target value	CW/CCW	Pulse and direction forward OFF/ reverse ON	Pulse and direction forward ON/ reverse OFF	HSC counting Method
Positive	**Pulse output from CW**	**Pulse output when direction output is OFF**	**Pulse output when direction output is ON**	**Incremental**
Negative	**Pulse output from CCW**	**Pulse output when direction output is ON**	**Pulse output when direction output is OFF**	**Decremental**

Example:

When the current position (value of elapsed value area) is 5000, the pulse of 1000 is output from CW by executing the pulse output instruction with the target value +1000, and the current position will be 6000.

Absolute <Absolute value control>

Outputs a number of pulses equal to the difference between the set target value and the current value.

Selected Mode / Target value	CW/CCW	Pulse and direction forward OFF/ reverse ON	Pulse and direction forward ON/ reverse OFF	HSC counting method
Target value greater than current value	**Pulse output from CW**	**Pulse output when direction output is OFF**	**Pulse output when direction output is ON**	**Incremental**
Target value less than current value	**Pulse output from CCW**	**Pulse output when direction output is ON**	**Pulse output when direction output is OFF**	**Decremental**

Example:

When the current position (value of elapsed value area) is 5000, the pulse of 4000 is output from CCW by executing the pulse output instruction with the target value +1000, and the current position will be 1000.

Home return

- When executing the F171 (SPDH) instruction, the pulse is continuously output until the home input (X102 or X202) is enabled.
- To decelerate the movement when near the home position, designate a near home input and set bit 4 of special data register DT90052 to off → on → off.
- The deviation counter clear output can be output when home return has been completed.

JOG operation

- Pulses are output from the specified channel while the trigger for F172 (PLSH) instruction is in the ON state. Also, the pulse output can be stopped when the specified target value is matched.
- The direction output and output frequency are specified by F172 (PLSH) instruction.

Ramco National www.PanasonicSensors.com 1-800-280-6933

Precautions on programming

Address	Flag conditions	The uses of the flag in the program
R911C Control flag (CH0)	Turns on during execution of pulse output instructions and then maintains that state during pulse output from CH0. This flag is the same for instructions F166 to F175.	Use this to prohibit the simultaneous execution of other high-speed counter instructions and pulse output instructions, and to verify completion of an action.
R911D Control flag (CH1)	Turns on during execution of pulse output instructions and then maintains that state during pulse output from CH0. This flag is the same for instructions F166 to F175.	Use this to prohibit the simultaneous execution of other high-speed counter instructions and pulse output instructions, and to verify completion of an action.

Note:

- The above flags vary during scanning.
  Example: If the above flags are used for more than one time as input conditions, there may be the different states in the same scan. Replace with internal relays at the beginning of the program as a measure.

Ramco National www.PanasonicSensors.com 1-800-280-6933

10.4.3 I/O Allocation

Double pulse input driver
(CW pulse input and CCW pulse input method)

- Two output contacts are used as a pulse output for “CW, CCW”.
- The I/O allocation of pulse output terminal and home input is determined by the channel used.
- Set the control code for F171 (SPDH) instruction to “CW/CCW”.

<When using CH0>

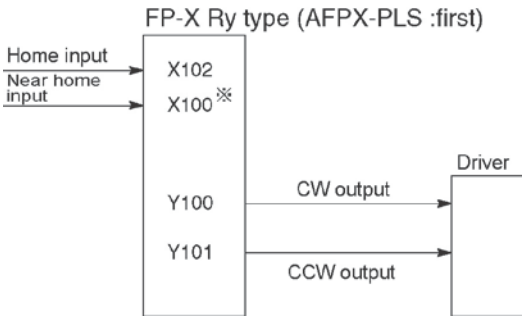

* Input such as X100 or X101 on the pulse I/O cassette can be specified for the near home input.

<When using CH1>

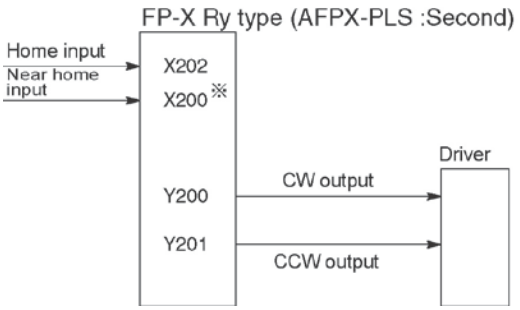

* Input such as X200 or X201 on the pulse I/O cassette can be specified for the near home input.

Note) If there is no input remained on the pulse I/O cassette, the input of the main unit can be used.

Single pulse input driver
(pulse input and directional switching input method)

- One output point is used as a pulse output and the other output is used as a direction output.
- The I/O allocation of pulse output terminal, direction output terminal, and home input is determined by the channel used.
- Near home input is substituted by allocating the desired contact and turning on and off the <bit4> of special data register DT90052.
- Up to two driver systems can be connected.

<When using CH0>

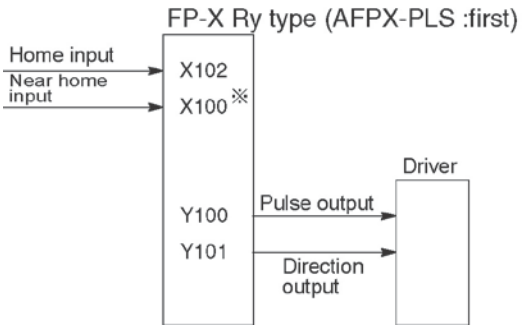

* Input such as X100 or X101 on the pulse I/O cassette can be specified for the near home input.

<When using CH1>

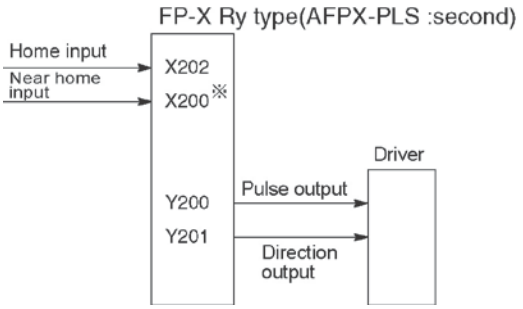

* Input such as X200 or X201 on the pulse I/O cassette can be specified for the near home input.

Reference: <10.2.1 Table of Specifications>

Ramco National www.PanasonicSensors.com 1-800-280-6933

10.4.4 Pulse output control instructions (F0) (F1)

Pulse output control instruction (F0)

- This instruction is used for resetting the built-in high-speed counter, stopping the pulse output, and setting and resetting the near home input.
- Specify this F0 (MV) instruction together with special data register DT90052.
- Once this instruction is executed, the settings will remain until this instruction is executed again.

Example 1:
Enable the near home input during home return operations and begin deceleration.
In case of CH0

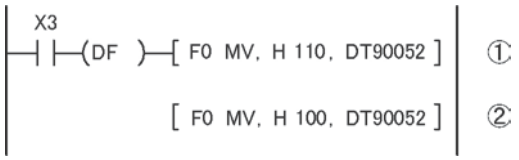

In case of CH1

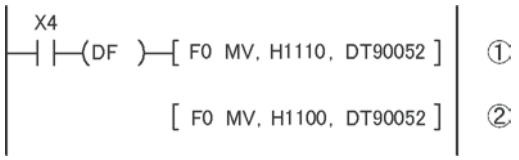

In these programs, the near home input is enabled in step (1) and 0 is entered just after that in step (2) to perform the preset operations.

Example 2:
Performing a forced stop of the pulse output.
In case of CH0

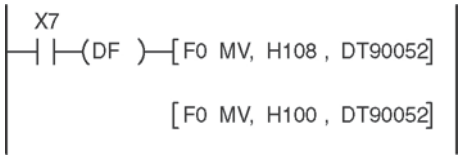

In case of CH1

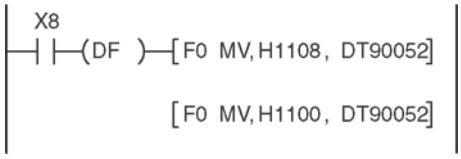

The output counting value of the elapsed value area may be different from the input counting value of the motor side if the forced stop is executed by these programs.

Ramco National www.PanasonicSensors.com 1-800-280-6933

Key Point: High-speed counter/pulse output control flag area of FP-X Ry type

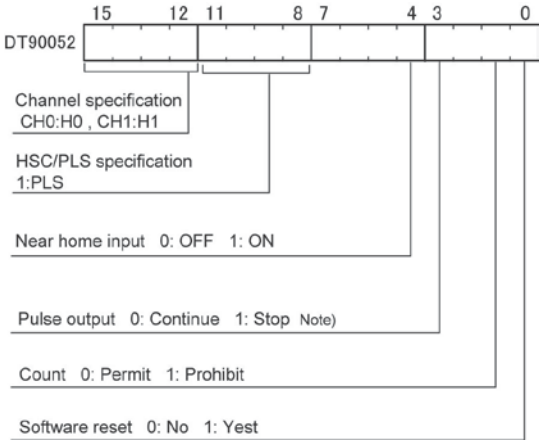

- The area DT90052 for writing channels and control codes is allocated as shown in the left figure.
- Control codes written with an F0 (MV) instruction are stored by channel in special data register DT90372 and DT90373.

Note) The output counting value of the elapsed value area may be different from the input counting value of the motor side if the pulse output is stopped by the "Continue/stop of pulse output". After the pulse output stops, execute the home return.

Pulse output control code monitor area

High-speed counter Channel No.	Control code monitor area	
	FP-X Ry type	FP-X Tr type
ch0	DT90372	DT90380
ch1	DT90373	DT90381
ch2	-	DT90382
ch3	-	DT90383

Reference: <10.2.1 Table of specifications> for information on the special data register.

Elapsed value write and read instruction (F1)

- This instruction is used to read the pulse number counted by the pulse output control.
- Specify this F1 (DMV) instruction together with the special data register DT90348.
- The elapsed value is stored as 32-bit data in the combined area of special data register DT90348 and DT90349.
- Use only this F1 (DMV) instruction to set the elapsed value.

Example 1:

Writing the elapsed value

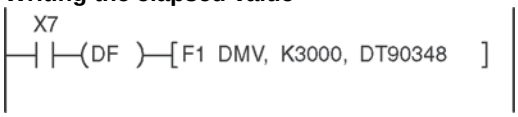

Set the initial value of K3000 in the pulse output CH0.

Reading the elapsed value

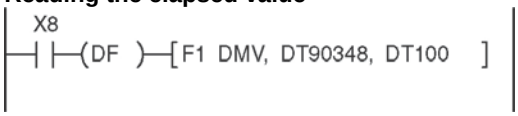

Reads the elapsed value of the pulse output CH0 to DT100 and DT101.

FP-X Ry type - Elapsed value and target value areas of pulse output ch0 to ch1

Pulse output Channel No.	Control flag	Elapsed value area	Target value area
ch0	R911C	DT90348 to DT90349	DT90350 to DT90351
ch1	R911D	DT90352 to DT90353	DT90354 to DT90355

Ramco National www.PanasonicSensors.com 1-800-280-6933

10.4.5 Wiring for Pulse Output Sample Program (F171 to F174)

Wiring example

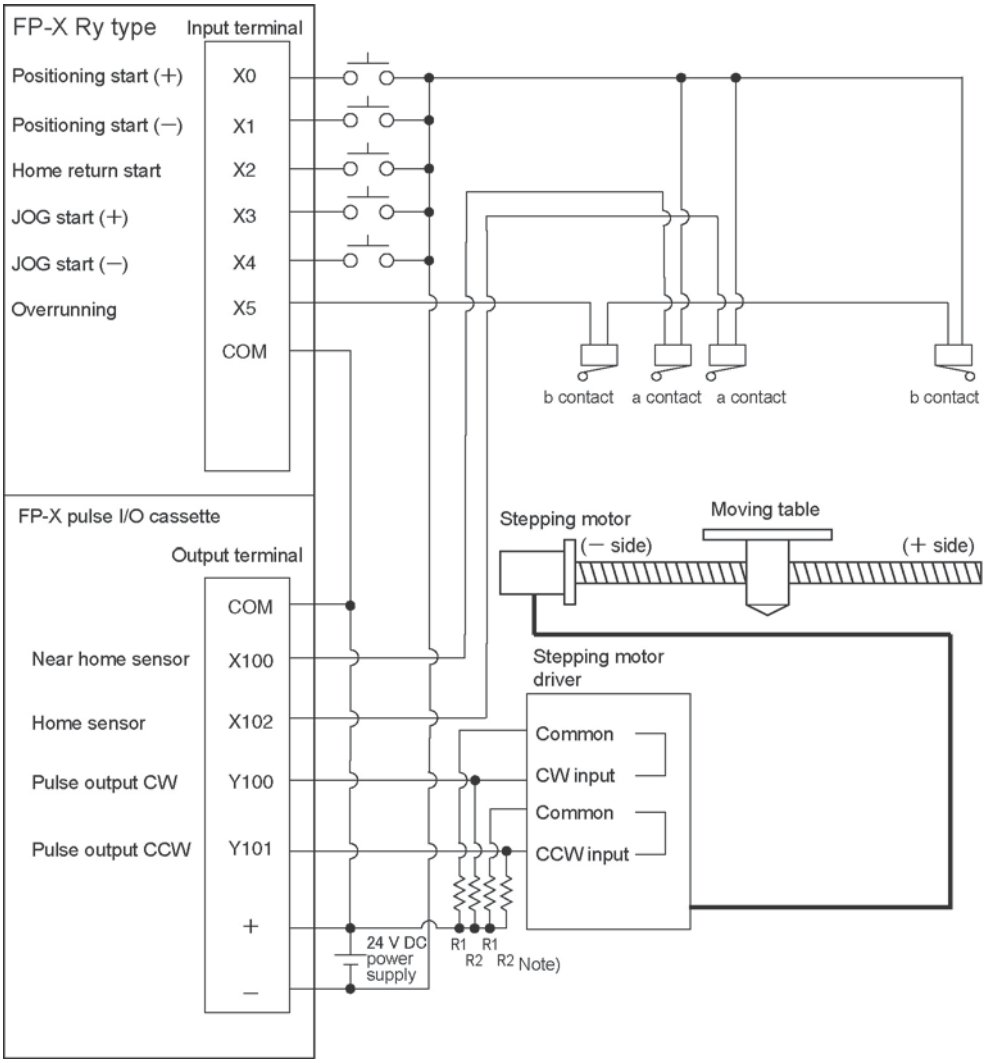

Note) When the stepping motor input is a 5 V optical coupler type, connect a 2 kΩ (1/2 W) resistor with the R1 and a 2 kΩ (1/2 W) to 470 Ω (2 W) resistor with the R2.

Table of I/O allocation

I/O No.	Description	I/O No.	Description
X0	Positioning start signal (+)	**X102**	Home sensor input
X1	Positioning start signal (-)	**Y100**	Pulse output CW
X2	Home return start signal	**Y101**	Pulse output CCW
X3	JOG start signal (+)	**R10**	Positioning in progress
X4	JOG start signal (-)	**R11**	Positioning operation start
X5	Overrunning signal	**R12**	Positioning done pulse
X100	Near home sensor input	**R911C**	High-speed counter control flag for CH0

Ramco National www.PanasonicSensors.com 1-800-280-6933

10.4.6 Positioning Control Instruction F171 - Trapezoidal

- This instruction automatically performs trapezoidal control according to the specified data table.

```
X0
─┤ ├─(DF )─[F1  DMV,  H1100,   DT100  ]
        [F1  DMV,  K500,    DT102  ]
        [F1  DMV,  K5000,   DT104  ]
        [F1  DMV,  K300,    DT106  ]
        [F1  DMV,  K10000,  DT108  ]
        [F1  DMV,  K0,      DT110  ]
        [F171  SPDH,  DT100,  K0   ]
```

Pulses are generated from output Y100 at an initial speed of 500 Hz, a maximum speed of 5000 Hz, an acceleration/deceleration time of 300 ms, and a movement amount of 10000 pulses.

When this program runs, the positioning data table and the pulse output diagram will be as shown below.

●Positioning data table

DT100 DT101	Control code	*1	: H 1100
DT102 DT103	Initial speed	*2	: 500 Hz
DT104 DT105	Max. speed	*2	: 5000 Hz
DT106 DT107	Acceleration/ deceleration time	*3	: 300 ms
DT108 DT109	Target value	*4	: 10000 pulse
DT110 DT111	Pulse stop		: K0

●Pulse output diagram

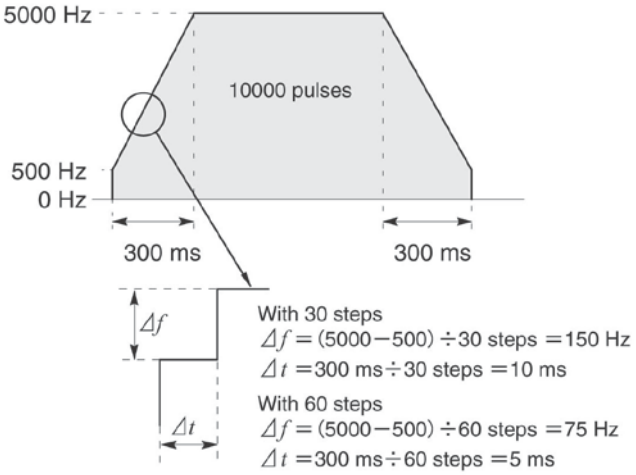

●Regarding the specification of acceleration/deceleration time

・For specifying acceleration/deceleration time, No. of steps and initial speed, set the value to be calculated by the formula below. Specify acceleration/deceleration time in the 30 ms unit with 30 steps, and in the 60 ms unit with 60 steps. *5

Acceleration/deceleration time
t [ms]≧(No. of steps × 1000)/Initial speed f0 [Hz]

Ramco National www.PanasonicSensors.com 1-800-280-6933

(*1) : Control code <H constant> H □□□□□□□□

0 : Fixed

■Number of acceleration/deceleration steps
0 : 30 steps
1 : 60 steps

■Duty (on width)
0 : Duty 1/2 (50%)
1 : Duty 1/4 (25%)

■Frequency range
0 : 1.5 Hz to 9.8 kHz
1 : 48 Hz to 100 kHz
2 : 191 Hz to 100 kHz

■Operation mode and output method

00 : Incremental	CW/CCW	
02 : Incremental	pulse and direction	(forward off / reverse on)
03 : Incremental	pulse and direction	(forward on/ reverse off)
10 : Absolute	CW/CCW	
12 : Absolute	pulse and direction	(forward off / reverse on)
13 : Absolute	pulse and direction	(forward on/ reverse off)

(*2) : Speed (Frequency) (Hz) <K constant>

Frequency range

0 : 1.5 Hz to 9.8 kHz [K1 to K9800 (unit : Hz)]
(Max. error near 9.8 kHZ approx. −0.9 kHz)
* Set "K1" to specify 1.5 Hz.

1 : 48 Hz to 100 kHz [K48 to K100000 (unit : Hz)]
(Max. error near 100 kHz approx. −3 kHz)

2 : 191 Hz to 100 kHz [K191 to K100000 (unit : Hz)]
(Max. error near 100 kHz approx. −0.8 kHz)

Initial speed: Set 30 kHz or less.

(*3) : Aceleration/deceleration time (ms) <K constant>
With 30 steps: K30 to K32760 (Specify by 30 steps) *5
With 60 steps: K60 to K32760 (Specify by 60 steps) *5

(*4) : Target value <K constant>
K−2147483648 to K2147483647

(*5) : When the time is not specified in 30 ms units nor 60 ms units, it will be automatically corrected to the multiple value (larger value) of 30 ms or 60 ms.

Ramco National www.PanasonicSensors.com 1-800-280-6933

Sample program

Incremental Position Control Operation: Plus Direction

When X0 turns on, the pulse is output from CW output Y100 of the specified channel CH0.

Note) In that case, the memory Y100 does not turn on/off according to the pulse output, and also the monitoring is not possible.

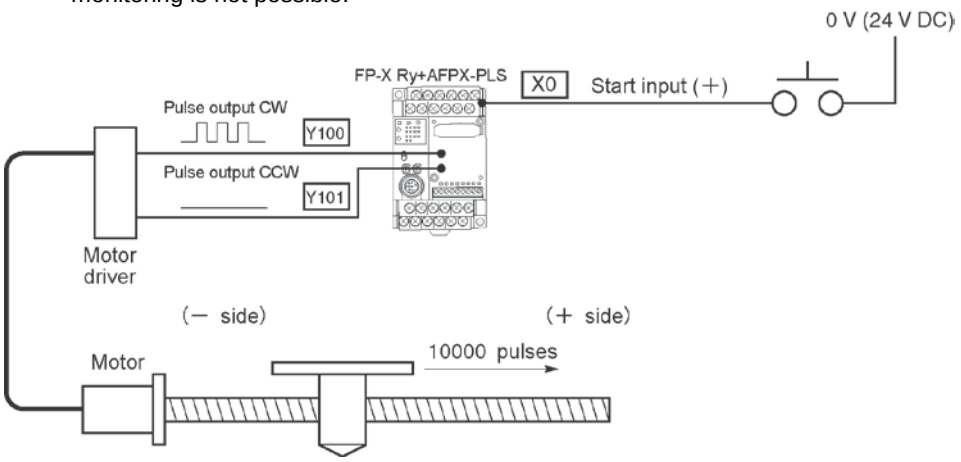

Program

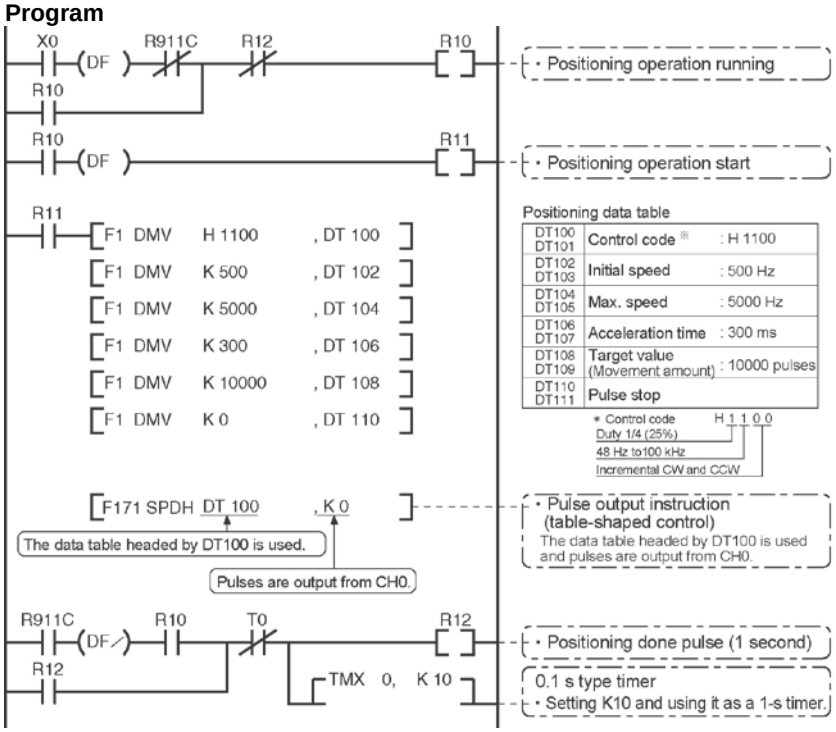

Pulse output diagram

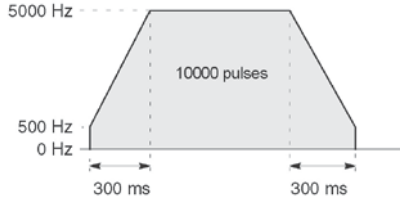

Ramco National www.PanasonicSensors.com 1-800-280-6933

Incremental Position Control Operation: Minus Direction

When X1 turns on, the pulse is output from CCW output Y101 of the specified channel CH0.
Note) In that case, the memory Y101 does not turn on/off according to the pulse output.

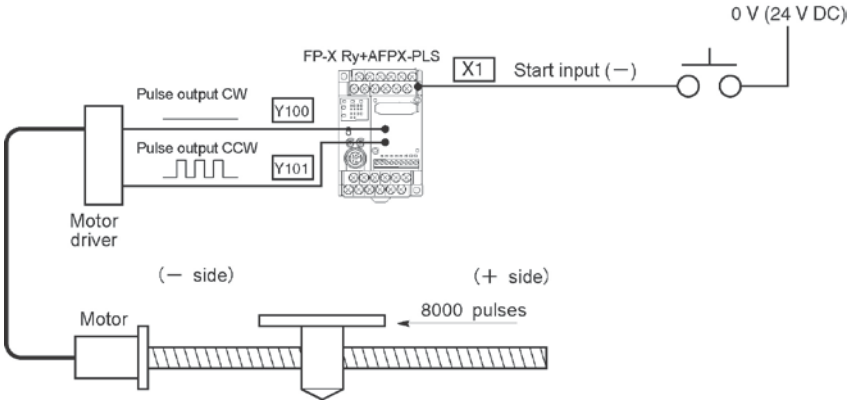

Program

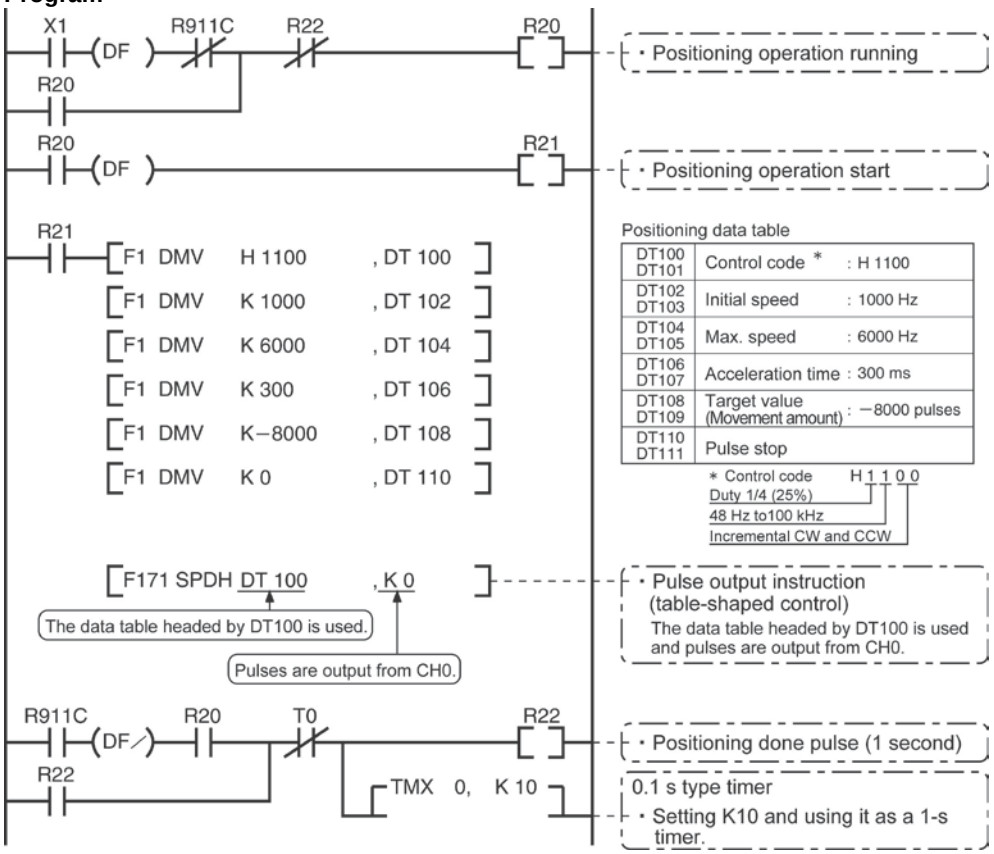

Pulse output diagram

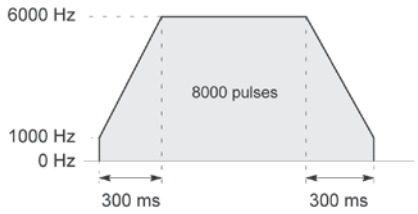

Ramco National www.PanasonicSensors.com 1-800-280-6933

Absolute position control operation

When X1 is turned on, pulses are output from CW output Y100 or CCW output Y101 of the specified channel CH0. If the current value at that point is larger than 22000, the pulses are output from Y101, and if the value is smaller than 22000, the pulses are output from Y100.

Note) In that case, the memory Y100 or Y101 does not turn on/off according to the pulse output, and also the monitoring is not possible.

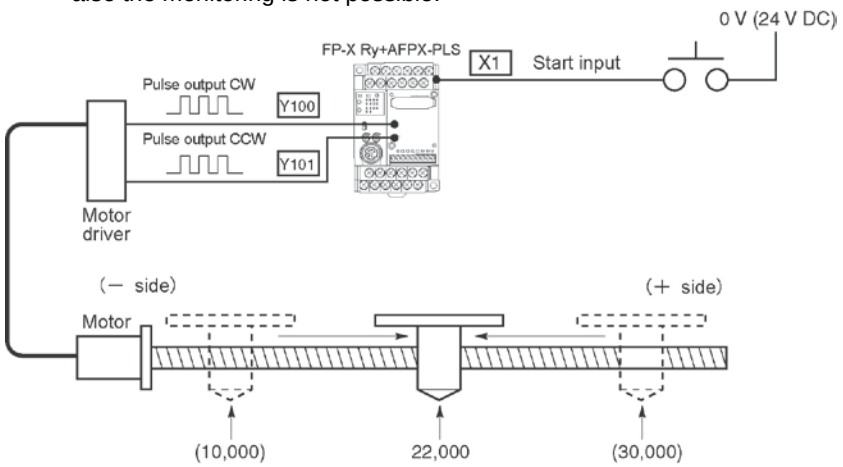

Regardless of the current value, its movement is towards position "22,000."

Program

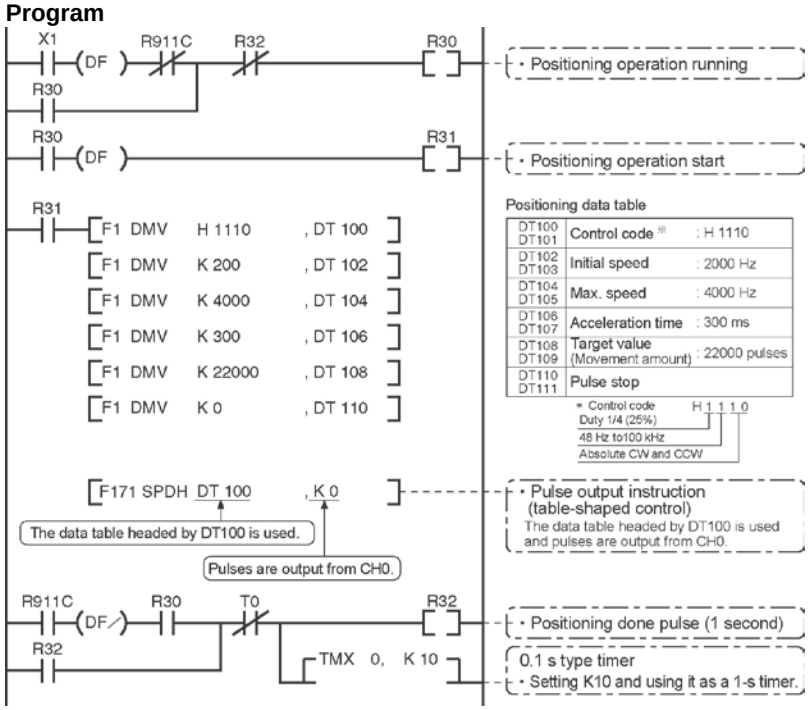

Pulse output diagram

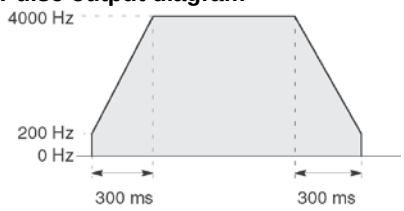

Ramco National www.PanasonicSensors.com 1-800-280-6933

10.4.7 Positioning Control Instruction F171 – Home Return (Common to Transistor type)

- This function performs home return according to the specified data table. The elapsed value area CH0 (DT90348, DT90349) and CH1 (DT90352, DT90353) is cleared to zero after the completion of home return.

```
X2
─┤ ├─(DF )─[F1 DMV, H1125,  DT200 ]
        [F1 DMV, K200,   DT202 ]
        [F1 DMV, K2000,  DT204 ]
        [F1 DMV, K150,   DT206 ]
        [F1 DMV, K10,    DT208 ]
        [F171 SPDH, DT200, K0  ]
```

Pulses are output from Y101 and a return to the home position is carried out at an initial speed of 200 Hz, a maximum speed of 2000 Hz, and an acceleration/deceleration time of 150 ms.

When this program runs, the positioning data table and the pulse output diagram will be as shown below.

●Positioning data table

DT200 DT201	Control code	*1	: H 1125
DT202 DT203	Initial speed	*2	: 200 Hz
DT204 DT205	Max. speed	*2	: 2000 Hz
DT206 DT207	Acceleration/ deceleration time	*3	: 150 ms
DT208 DT209	Deviation counter clear signal output time	*4	: 10 ms

●Pulse output diagram
(when home position proximity input is not used)

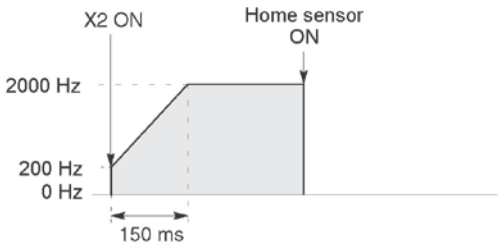

●Pulse output
(when home position proximity input is used)

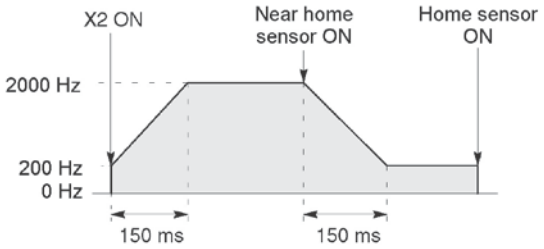

●Regarding the specification of acceleration/deceleration

- For specifying acceleration/deceleration time, No. of steps and initial speed, set the value to be calculated by the formula below. Specify acceleration/deceleration time in the 30 ms unit with 30 steps, and in the 60 ms unit with 60 steps. *5

Acceleration/deceleration time
t [ms] ≧ (No. of steps × 1000)/Initial speed f0 [Hz]

Ramco National www.PanasonicSensors.com 1-800-280-6933

(*1) : Control code <H constant> H □□□□□□□□

0 : Fixed

■Number of acceleration/deceleration steps
0 : 30 steps
1 : 60 steps

■Duty (on width)
0 : Duty 1/2 (50%)
1 : Duty 1/4 (25%)

■Frequency range
0 : 1.5 Hz to 9.8 kHz
1 : 48 Hz to 100 kHz
2 : 191 Hz to 100 kHz

■Optional mode and output type
20 : Type I home return CW
21 : Type I home return CCW
22 : Type I home return Direction output OFF
23 : Type I home return Direction output ON
24 : Type I home return CW and deviation counter clear
25 : Type I home return CCW and deviation counter clear
26 : Type I home return Direction output OFF and deviation counter clear
27 : Type I home return Direction output ON and deviation counter clear
30 : Type II home return CW
31 : Type II home return CCW
32 : Type II home return Direction output OFF
33 : Type II home return Direction output ON
34 : Type II home return CW and deviation counter clear
35 : Type II home return CCW and deviation counter clear
36 : Type II home return Direction output OFF and deviation counter clear
37 : Type II home return Direction output ON and deviation counter clear

(*2) : Speed (Frequency) (Hz) <K constant>

Frequency range

0 : 1.5 Hz to 9.8 kHz [K1 to K9800 (unit : Hz)]
(Max. error near 9.8 kHZ approx. −0.9 kHz)
∗ Set "K1" to specify 1.5 Hz.

1 : 48 Hz to 100 kHz [K48 to K100000 (unit : Hz)]
(Max. error near 100 kHZ approx. −3 kHz)
∗Duty 1/4 is recommended for this range.

2 : 191 Hz to 100 kHz [K191 to K100000 (unit : Hz)]
(Max. error near 100 kHZ approx. −0.8 kHz)
∗Duty 1/4 is recommended for this range.

Initial speed: Set 30 kHz or less.

(*3) : Acceleration/deceleration time (ms) <K constant>

With 30 steps: K30 to K32760 (Specify in 30 steps) *5
With 60 steps: K60 to K32760 (Specify in 60 steps) *5

(*4) : Deviation counter clear signal (ms) <K constant>

Output time of deviation counter clear signal is specified.
0.5 ms to 100 ms [K0 to K100] Set value and error (0.5 ms or less)
∗Specify "K0" when not using or when specifying 0.5 ms.
Deviation counter clear signal is allocated in Y102 for CH0 and in Y202 for CH1.

(*5) : When the time is not specified in 30 ms units nor 60 ms units, it will be automatically corrected to the multiple value (larger value) of 30 ms or 60 ms.

Ramco National www.PanasonicSensors.com 1-800-280-6933

Home return operation modes

There are two operation modes for a home return with the FP-X: Type I and Type II.

Type I home return

The home input is effective regardless of whether or not here is a near home input, whether deceleration is taking place, or whether deceleration has been completed.

・Without near home input

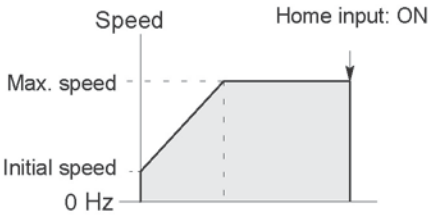

・With near home input

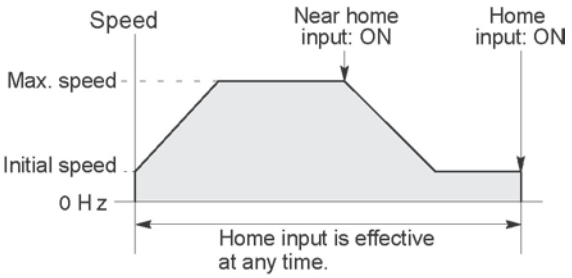

・Home input ON during deceleration

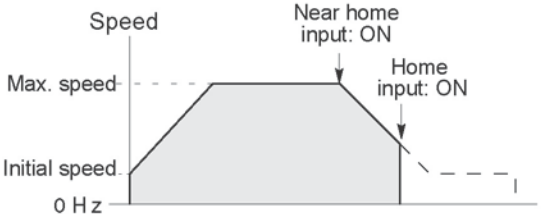

Type II home return

In this mode, the home input is effective only after deceleration (started by near home input) has been completed.

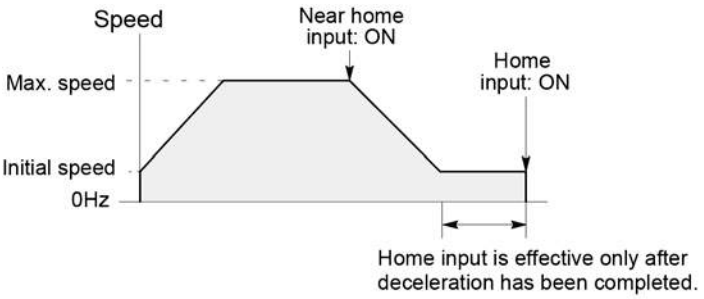

Reference:

The pulse output control instruction (F0) is used for the near home input.
<10.4.4 Pulse output control instructions (F0) (F1)>.

Ramco National www.PanasonicSensors.com 1-800-280-6933

Sample program

Home return operation using CH0: Minus direction

When X2 turns on, a pulse is output from CCW output Y101 of the specified channel CH0 and the return to home begins. When X100 turns on, deceleration begins, and when X102 turns on, home return is completed. After the return to home is completed, the elapsed value areas DT90348 and DT90349 are cleared to 0.

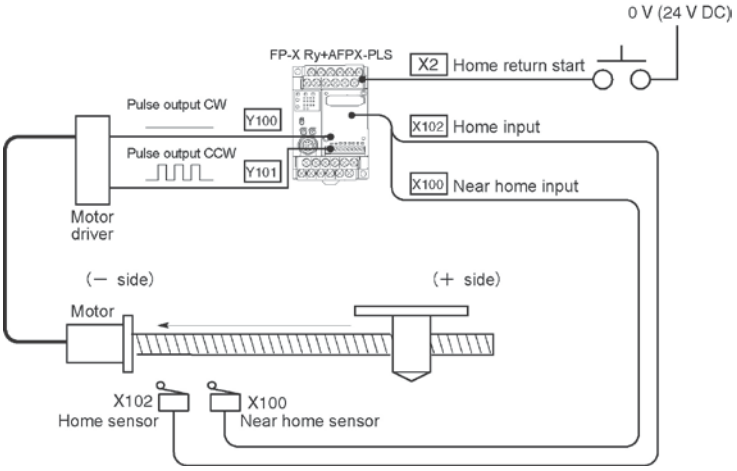

Program

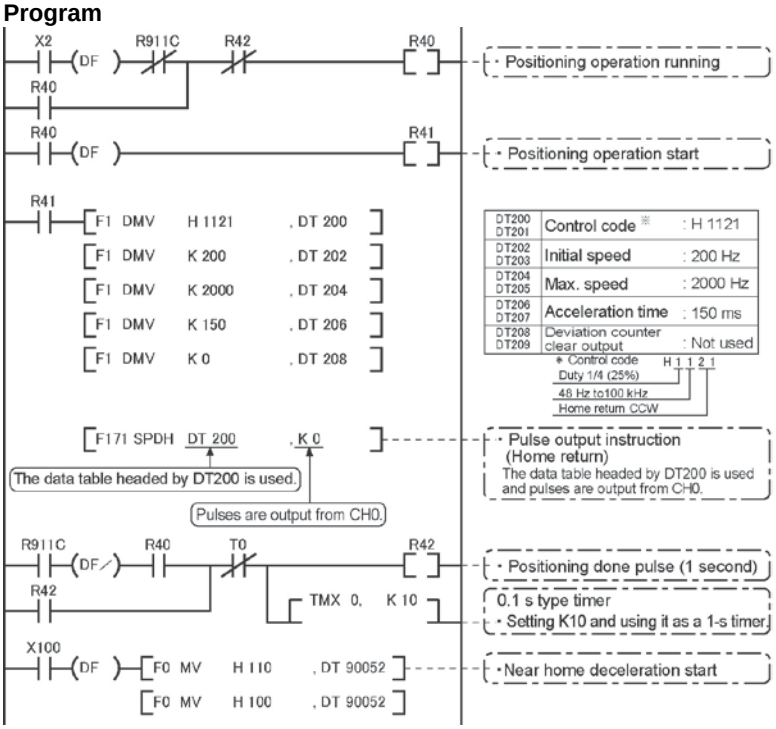

Pulse output diagram

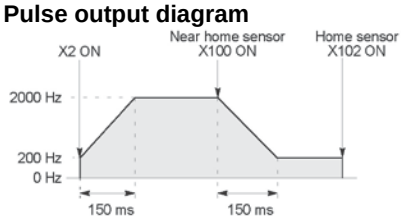

Ramco National www.PanasonicSensors.com 1-800-280-6933

Sample program

Home return operation using CH1: Plus direction

When X3 turns on, a pulse is output from CW output Y200 of the specified channel CH1 and the return to home begins. When X200 turns on, deceleration begins, and when X202 turns on, home return is completed. After the return to home is completed, the elapsed value areas DT90352 and DT90353 are cleared to 0.

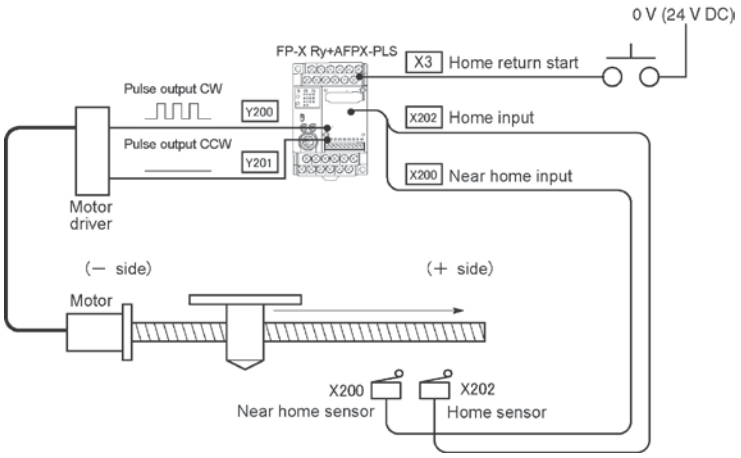

Program

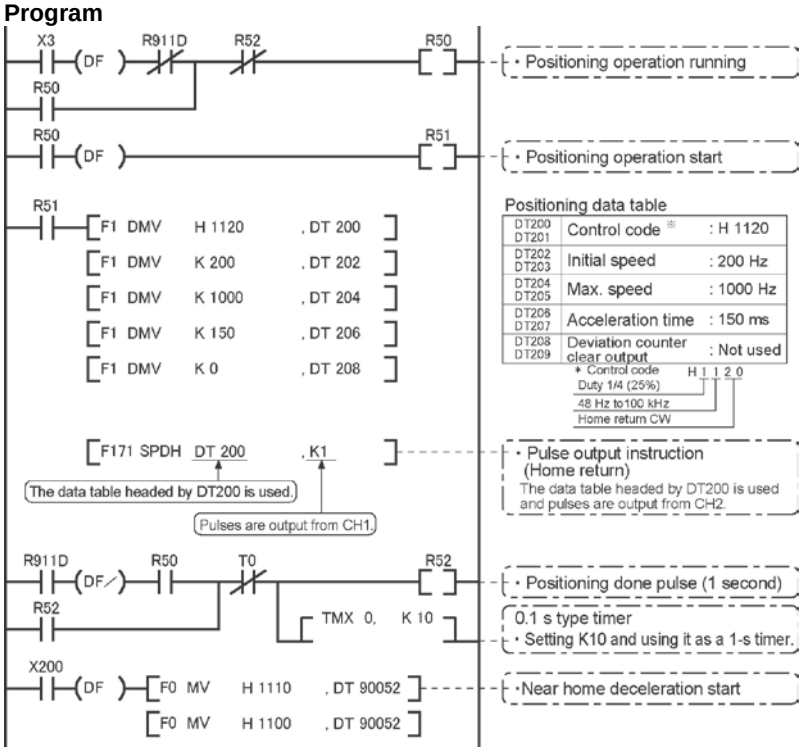

Pulse output diagram

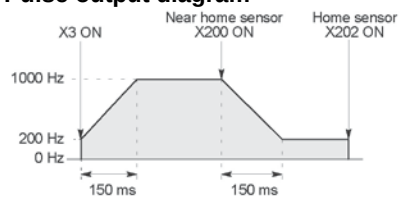

Ramco National www.PanasonicSensors.com 1-800-280-6933

10.4.8 Pulse Output Instruction F172 – JOG operation

- This instruction is used for JOG operation by obtaining a pulse from the desired output when the execution condition (trigger) turns on.

```
X3
─┤ ├──[F1 DMV , H1110, DT300    ]
      [F1 DMV , K300,  DT302    ]
      [F172 PLSH, DT300, K0     ]
```

The pulse of 300 Hz is output from Y100 during X3 is turned on.

When this program runs, the data table and the pulse output diagram will be as shown below.

●Data table

DT300 DT301	Control code *1	: H 1110
DT302 DT303	Frequency *2	: 300 Hz

●Pulse output diagram

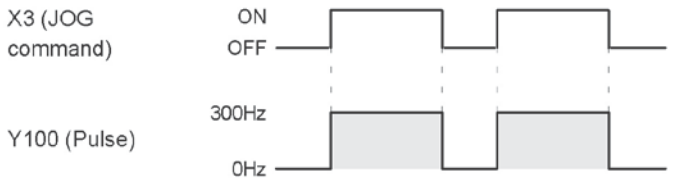

(*1) : Control code <H constant> H □□□□□□□□

0 : Fixed

■Target value setting
0 : Mode with no target value
1 : Target value match stop mode

■Duty (on width)
0 : Duty 1/2 (50%)
1 : Duty 1/4 (25%)

■Frequency range
0 : 1.5 Hz to 9.8 kHz
1 : 48 Hz to 100 kHz
2 : 191 Hz to 100 kHz

■Output method

00 : No counting	CW
01 : No counting	CCW
10 : Incremental counting	CW
12 : Incremental counting	Direction output OFF
13 : Incremental counting	Direction output ON
21 : Decremental counting	CCW
22 : Decremental counting	Direction output OFF
23 : Decremental counting	Direction output ON

Ramco National www.PanasonicSensors.com 1-800-280-6933

(*2) : Frequency (Hz) <K constant>

Frequency range

0 : 1.5 Hz to 9.8 kHz [K1 to K9800 (unit : Hz)]
(Max. error near 9.8 kHz approx. -0.9 kHz)
* Set "K1" to specify 1.5 Hz.

1 : 48 Hz to 100 kHz [K48 to K100000 (unit : Hz)]
(Max. error near 100 kHz approx. -3 kHz)

2 : 191 Hz to 100 kHz [K191 to K100000 (unit : Hz)]
(Max. error near 100 kHz approx. -0.8 kHz)

In case of count mode, set the frequency to 30 kHz or less for executing instructions at the first time.

(*3) : Target value (Absolute value)

This is used when setting the target value match stop mode. (Absolute only)
Designate the target value setting in the range indicated below.
If an out of range value is designated, the number of pulses output will be different than the designated value. The target value setting is ignored in the no count mode.

Output method	Range of target values which can be designated
Incremental counting	Designate a value larger than the current value.
Decremental counting	Designate a value smaller than the current value.

Key Point:

The FP-X supports two operation modes for JOG operation, one in which no target value is specified, and one in which feed stops when the target value is reached.

Normal jogging operation feed (no target value specified)

Pulses are output in accordance with the conditions set in the data table, as long as execution condition is on.

●Data table

DT300 DT301	Control code ※1	: H 1110
DT302 DT303	Frequency ※2	: 300 Hz

●Pulse output diagram

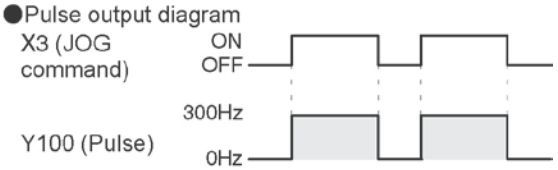

Output stops when target value is reached

A target value at which pulse output stops can be specified for jogging operation. As shown below, this mode is selected in the control code, and the target value (an absolute value) is specified in the data table.

●Data table

DT300 DT301	Control code ※1	: H 11110
DT302 DT303	Frequency ※2	: 300 Hz
DT304 DT305	Target value ※3	: K 1000

●Pulse output diagram

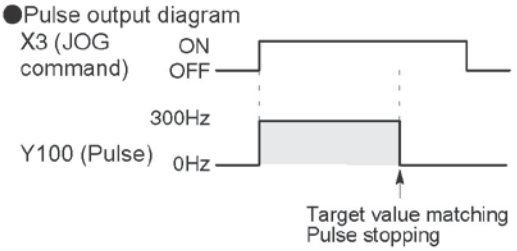

Ramco National www.PanasonicSensors.com 1-800-280-6933

Sample program

JOG operation : Plus direction

While X3 is in the ON state, a pulse is output from the CW output Y100 of the specified channel CH0.

Program

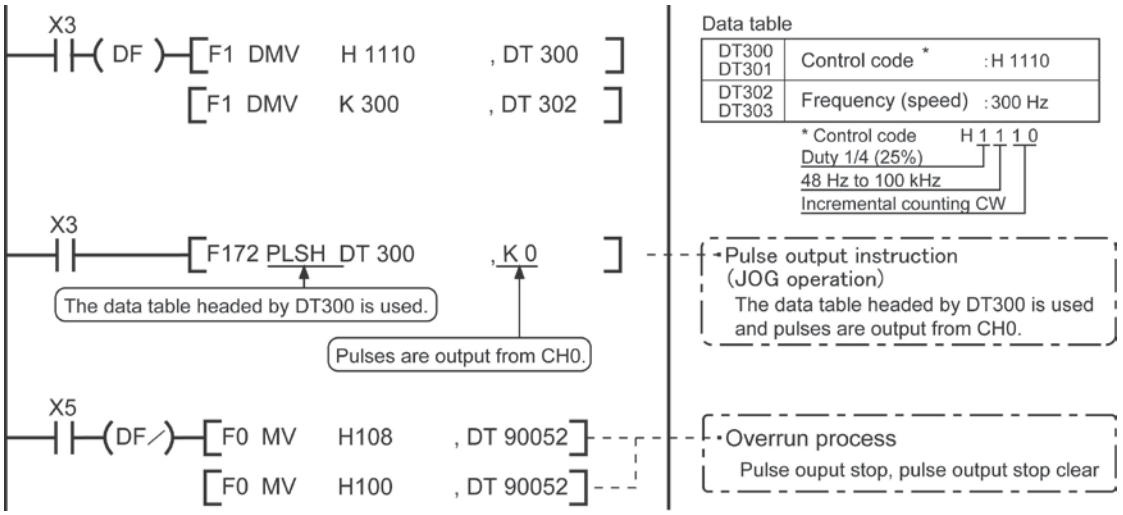

Pulse output diagram

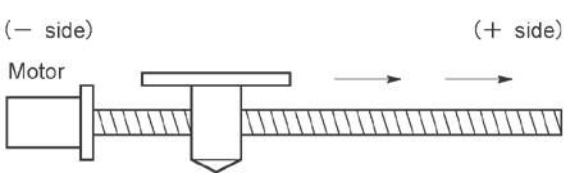

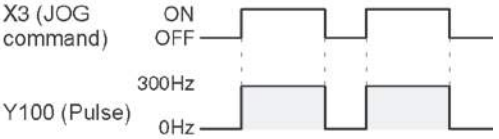

Ramco National www.PanasonicSensors.com 1-800-280-6933

JOG operation : Minus direction

While X4 is in the ON state, a pulse is output from the CCW output Y101 of the specified channel CH0.

Program

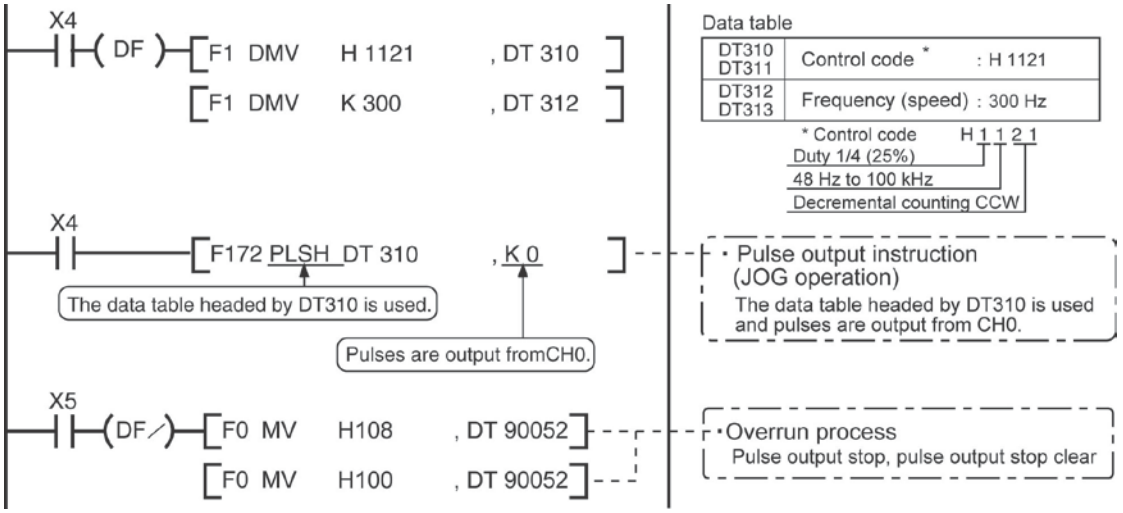

Pulse output diagram

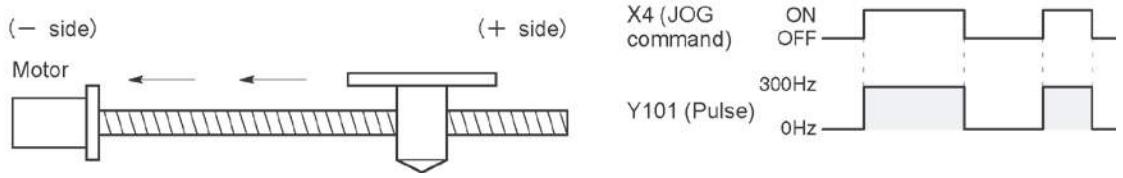

Reference:

The pulse output control instruction (F0) is used for the pulse output stop.

<10.4.4 Pulse output control instruction (F0) (F1)>

Ramco National www.PanasonicSensors.com 1-800-280-6933

10.4.9 Positioning Control Instruction F174 – Data Table Control

• Positioning is performed according to the specified data table.

```
R9010
 ├┤[F1 DMV , H 1200, DT400]   Control code "H1200"
   [F1 DMV , K 1000, DT402]   Frequency 1: 1000 Hz
   [F1 DMV , K 1000, DT404]   Targe value 1: 1000 pulses
   [F1 DMV , K 2500, DT406]   Frequency 2: 2500 Hz
   [F1 DMV , K 2000, DT408]   Target value 2: 2000 pulses
   [F1 DMV , K 5000, DT410]   Frequency 3: 5000 Hz
   [F1 DMV , K 5000, DT412]   Target value 3: 5000 pulses
   [F1 DMV , K 1000, DT414]   Frequency 4: 1000 Hz
   [F1 DMV , K 2000, DT416]   Target value 4: 2000 pulses
   [F1 DMV , K    0, DT418]   Pulse output stop
R10
 ├┤(DF)[F174 SP0H,DT400,K0]   Pulse output start
```

When the execution condition R10 goes on, pulses are output from Y100 of the pulse I/O cassette at a frequency of 1000 Hz, and positioning begins. At the point when 1000 pulses have been counted, the frequency switches to 2500 Hz. Positioning is then carried out sequentially in accordance with the values of the data table, until it stops at the data table containing the pulse output stop value (K0).
When the program runs, the data table and pulse output diagram are as shown below.

●Positioning data table

DT400 DT401	Control code	*1	:H 1200
DT402 DT403	Frequency 1	*2	:1000 Hz
DT404 DT405	Target value 1	*3	:1000 pulses
DT406 DT407	Frequency 2		:2500 Hz
DT408 DT409	Target value 2		:2000 pulses
DT410 DT411	Frequency 3		:5000 Hz
DT412 DT413	Target value 3		:5000 pulses
DT414 DT415	Frequency 4		:1000 Hz
DT416 DT417	Target value 4		:2000 pulses
DT418 DT419	Pulse output stop setting		:K 0

●Pulse output diagram

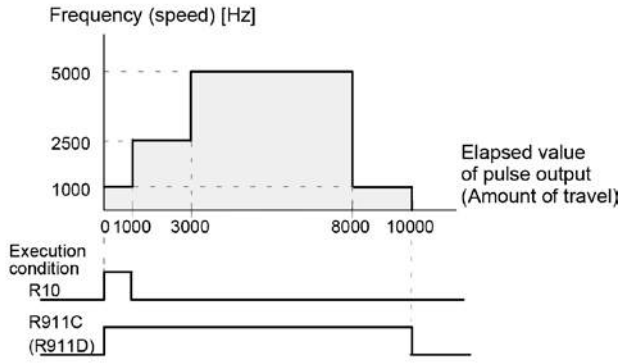

Note) When the execution condition R10 of the F174 (SP0H) instruction goes on, the high-speed counter control flag R911C (R911D) goes on. When the elapsed value reaches 10000 and pulse output stops, R911C (R911D) goes off.

Ramco National www.PanasonicSensors.com 1-800-280-6933

(*1) : Control code <H constant>

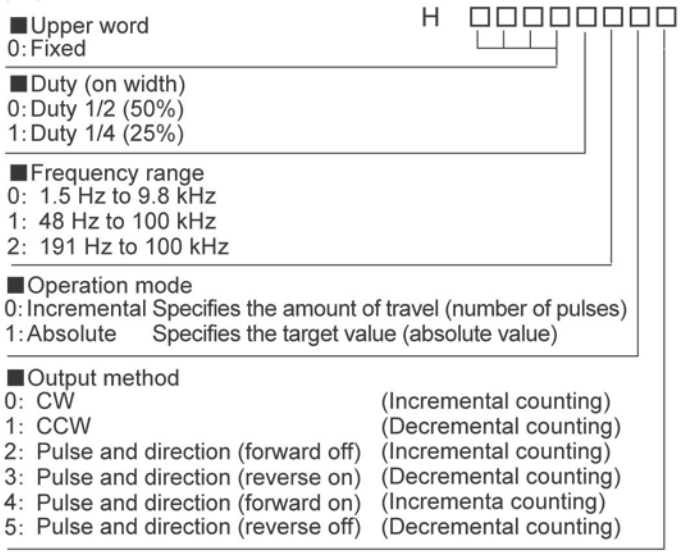

(*2) : Freqency (Hz) <K constant>

Frequency range

0 : 1.5 Hz to 9.8 kHz [K1 to K9800 (unit : Hz)]
(Max. error near 9.8 kHz approx. -0.9 kHz)
* Set "K1" to specify 1.5 Hz.

1 : 48 Hz to 100 kHz [K48 to K100000 (unit : Hz)]
(Max. error near 100 kHz approx. -3 kHz)

2 : 191 Hz to 100 kHz [K48 to K100000 (unit : Hz)]
(Max. error near 100 kHz approx. -0.8 kHz)

Set the frequency 1 which is initial speed to 30 kHz or less.

(*3) : Target value (K−2147483648 to K2147483647

The value of the 32-bit data specified for the target value should be within the range indicated in the table below.

Specification of control code		Range of allowable target values
Operation mode	Output method	
Incremental	Incremental counting	Specifies a positive value.
	Decremental counting	Specifies a negative value.
Absolute	Incremental counting	Specifies a value larger than the current value
	Decremental counting	Specifies a value smaller than the current value

Ramco National www.PanasonicSensors.com 1-800-280-6933

10.4.10 Pulse Output Instruction F175 – Linear Interpolation

- The linear interpolation controls positioning with two axes according to the specified data table.

```
R11
─┤ ├─(DF )─[F1 DMV, H1000,  DT500 ]
        [F1 DMV, K500,   DT502 ]
        [F1 DMV, K5000,  DT504 ]
        [F1 DMV, K300,   DT506 ]
        [F1 DMV, K5000,  DT508 ]
        [F1 DMV, K2000,  DT510 ]
        [F175 SPSH, DT500, K0  ]
```

Pulses are output from the X axis (CH0) and the Y axis (CH1), so that the composite speed is an initial speed of 500 Hz, the maximum speed is 5000 Hz, and the acceleration/deceleration time is 300 ms. The two axes are controlled so that a linear path is followed to the target position.
When the program runs, the data table and positioning path are as shown below.

Note:
The linear interpolation function can be used only when 2 units of the AFPX-PLS are being used.

●Positioning data table

DT500 DT501	Control code	: H 1000	*1	Setting area Designated with user program
DT502 DT503	Composite speed (Initial speed)	: 500 Hz	*2	
DT504 DT505	Composite speed (Max. speed)	: 5000 Hz	*2	
DT506 DT507	Acceleration/ Deceleration speed	: 300 ms	*3	
DT508 DT509	Target value (X-axis CH0)	: 5000 pulses	*4	
DT510 DT511	Target value (Y-axis CH1)	: 2000 pulses	*4	
DT512 DT513	X-axis (CH0) component speed (Initial speed)		*5	Operation result storage area Parameters for each axis component, calculated due to instruction execution, are stored here.
DT514 DT515	X-axis (CH0) component speed (Max. speed)			
DT516 DT517	Y-axis (CH1) component speed (Initial speed)			
DT518 DT519	Y-axis (CH1) component speed (Max. speed)			
DT520	X-axis (CH0) frequency range		*6	
DT521	Y-axis (CH1) frequency range			
DT522	X-axis (CH0) number of acceleration/deceleration steps		*7	
DT523	Y-axis (CH1) number of acceleration/deceleration steps			

●Positioning path

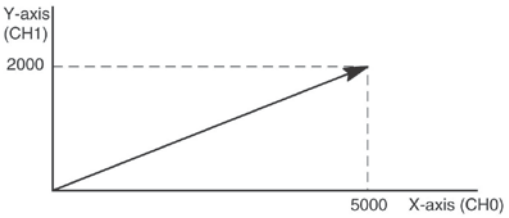

(*1): Control code <H constant>

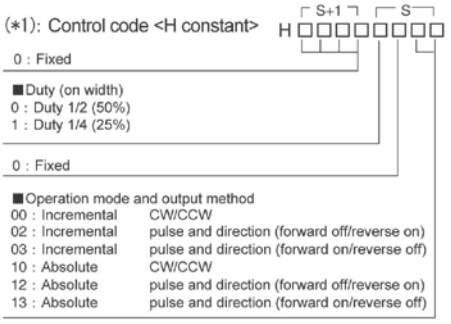

(*2): Composite speed (Initial speed, Max. speed) (Hz) <K constant>
1.5 Hz to 100 kHz [K1 to K100000]

However, 1.5 Hz is for an angle of 0 deg or 90 deg only.
Also, specify "K1" when specifying 1.5 Hz.

- If the component speed drops lower than the minimum speed for each frequency range, then the speed will become the corrected component speed, so be careful. (See ※6)
- When simultaneously using a high-speed counter, periodical interrupt or PLC link, do no set to 60 kHz or higher.
- If initial speed is set equal to maximum speed, pulses will be output with no acceleration/deceleration.
  Composite speed (Initial speed): 30 kHz or less
- Specify composite speed to make the component speed of each axis become1.5 Hz or higher.

Ramco National www.PanasonicSensors.com 1-800-280-6933

(*3): Acceleration/Deceleration time (ms) <K constant>
K0 to K32767
If this is 0, pulses will be output for the initial speed composite speed) as is, with no acceleration/deceleration

(*4): Target value (Movement amount)
K-8388608 to K8388607
Infinite feeding is not available.
When operating only one axis,
a) In incremental mode, set the target value for the axis which will be not be operated.
b) In absolute mode, set the target value for the axis which will not be operated the same as the current value.
Infinite feeding is not available during the linear interpolation control.

(*5): Component speed (Initial speed and max. speed of each axis)
This is stored as 2 words in real numbers type.

$$\text{X-axis component speed} = \frac{(\text{composite speed}) \times (\text{X-axis movement amount})}{\sqrt{((\text{X-axis movement amount})^2+(\text{Y-axis movement amount})^2)}}$$

$$\text{Y-axis component speed} = \frac{(\text{composite speed}) \times (\text{Y-axis movement amount})}{\sqrt{((\text{X-axis movement amount})^2+(\text{Y-axis movement amount})^2)}}$$

Composite speed (Initial speed): Set to 30kHz or less.

Example) Even if the initial speed is corrected (see ※6), the calculation value will be stored as is in the operation result storage area.

(*6): Frequency range
The system automatically selects the frequency range for each component of each axis.
Range 0: 1.5 Hz to 9.8 kHz
Range 1: 48 Hz to 100 kHz
Range 2: 191 Hz to 100 kHz
a) If maximum speed ≦ 9800 Hz
If initial speed < 1.5 Hz, initial speed is corrected to 1.5 Hz, and range 0 is selected.
If initial speed ≧ 1.5 Hz, range 0 is selected.
b) If 9800 Hz < maximum speed ≦ 100000 Hz,
If initial speed < 48 Hz, initial speed is corrected to 48 Hz, and range 0 is selected.
If 48 Hz ≦ initial speed < 191 Hz, range 1 is selected.
If initial speed ≧ 191 Hz, range 2 is selected.

(*7): Number of acceleration/deceleration steps
The system automatically calculates the number of acceleration/decelaration steps in the range 0 to 60 steps.
- If the oepration result is 0, pulses are output for the initial speed (composite speed) as is, with no acceleration/deceleration.
- The number of acceleration/deceleration steps is found using the formula: acceleration/deceleration time (ms) × component initial speed (Hz)

Example)
With incremental, initial speed 300 Hz, max. speed 5 kHz, acceleration/deceleration time 0.5 s, CH0 target value 1000, CH1 target value 50

$$\text{CH0 componet initial speed} = \frac{300 \times 1000}{\sqrt{(1000^2 + 50^2)}} = 299.626 \text{ Hz}$$

$$\text{CH1 componet initial speed} = \frac{300 \times 50}{\sqrt{(1000^2 + 50^2)}} = 14.981 \text{ Hz}$$

CH0 number of acceleration/deceleration steps
$= 500 \times 10^{-3} \times 299.626 \fallingdotseq 147.8$ ⇨ 60 steps
CH1 number of acceleration/deceleration steps
$= 500 \times 10^{-3} \times 14.981 \fallingdotseq 7.4$ ⇨ 7 steps

Note) Precaution for the specification of composite speed (initial speed)
If each component speed (initial speed) of CH0 and CH1 which is calculated using the following formula is not 1.5 kHz or higher, the path may not be linear.

$$f \geqq \frac{1.5\sqrt{\ (\Delta\chi 2+\Delta y 2)}}{\Delta\chi}$$

$\Delta\chi$: CH of which distance betwen the target value and the current value is short.
Δy : CH of which distance betwen the target value and the current value is long.

Ramco National www.PanasonicSensors.com 1-800-280-6933

Sample program of interpolation control
Wiring example

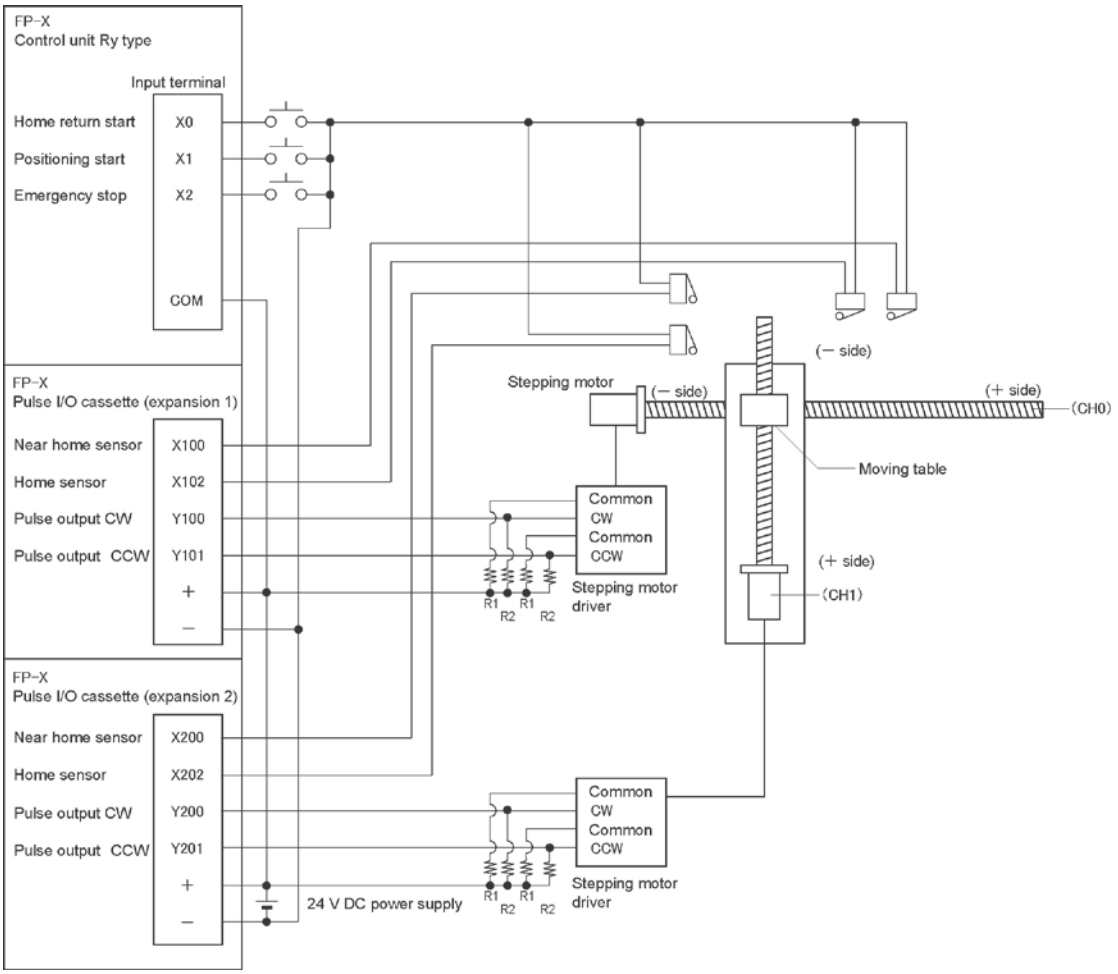

Note) When the stepping motor input is a 5 V optical coupler type, connect a 2 kΩ (1/2 W) resistor with the R1 and a 2 kΩ (1/2 W) to 470 Ω (2 W) resistor with the R2.

Table of I/O allocation

I/O No.	Description	
X0	Home return start signal	
X1	Positioning start	
X2	Emergency stop	
X100	Near home sensor	CH0
X102	Home sensor	
Y100	Pulse output CW	
Y101	Pulse output CCW	
X200	Near home sensor	CH1
X202	Home sensor	
Y200	Pulse output CW	
Y201	Pulse output CCW	

Ramco National www.PanasonicSensors.com 1-800-280-6933

Restrictions on positioning data setting

- Designate settings for the target position and moving amount so they are within the following range. Allowable range: -8,388,608 to +8,388,608
- When using in combination with other positioning instructions like F171, designate so the target value is within the above range, even in those instructions.

Sample program

Continuous interpolation control

- Using the linear interpolation function, perform positioning control that draws trajectory like the one shown below.

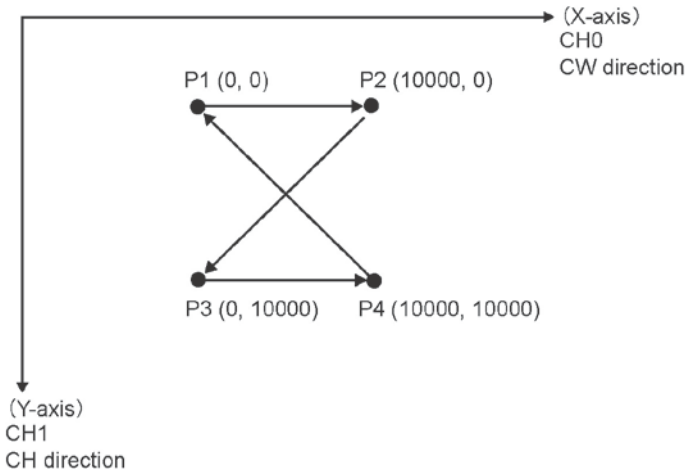

Relay allocation

Relay No.	Description	Relay No.	Description
X1	Positioning start	**R9010**	Always ON
X2	Emergency stop switch	**R911C**	Pulse output flag (CH0)
R20	From P1 to P2 start	**R911D**	Pulse output flag (CH1)
R21	From P2 to P3 start		
R22	From P3 to P4 start		
R23	From P4 to P1 start		
R2F	Positioning done		

Data register allocation

Item	Data register No.	Details	On this program details
User setting area for linear interpolation	DT0 to DT1	Control code	Control code when executing linear interpolation, absolute
	DT2 to DT3	Startup speed	2000 Hz
	DT4 to DT5	Target speed	2000 Hz
	DT6	Acceleration/de-celeration time	0 ms
	DT8 to DT9	Target position (X-axis)	Specify the target position of X-axis when moving from P1 → P2 → P3 → P4 → P1.
	DT10 to DT11	Target position (Y-axis)	Specify the target position of Y-axis when moving from P1 → P2 → P3 → P4 → P1.
Work area	DT12 to DT23	Operation result storage area	Parameters calculated due to instruction execution are stored.

Ramco National www.PanasonicSensors.com 1-800-280-6933

Program

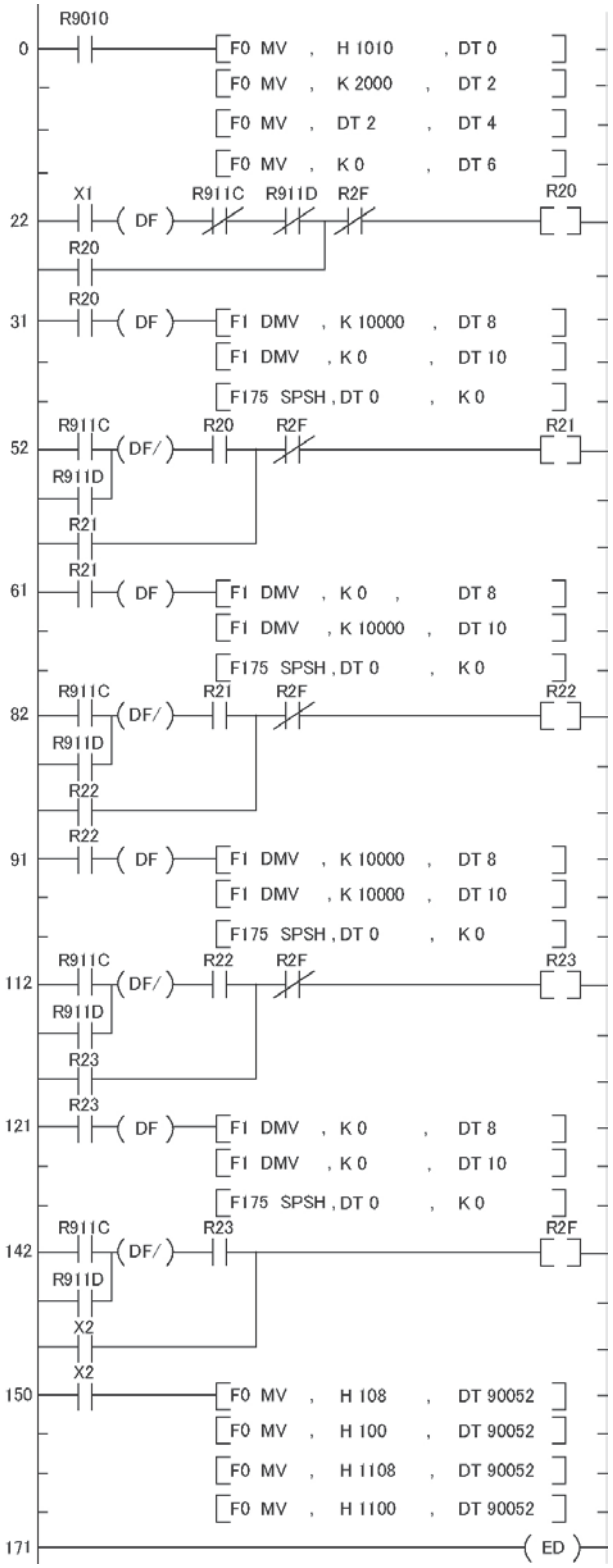

Ramco National www.PanasonicSensors.com 1-800-280-6933

Home return operation (Minus direction)

When X0 turns on, the pulse is output from CCW output Y101 of the specified channel CH0 and CCW output Y201 of the specified channel CH1, and the return to home begins.

In CH0, when X100 turns on, deceleration begins, and when X102 turns on, home return is completed. After the return to home is completed, the elapsed value areas DT90348 and DT90349 are cleared to 0.

In CH1, when X200 turns on, deceleration begins, and when X202 turns on, home return is completed. After the return to home is completed, the elapsed value areas DT90352 and DT90353 are cleared to 0.

When the operations in both CHs is completed, the return to home completes.

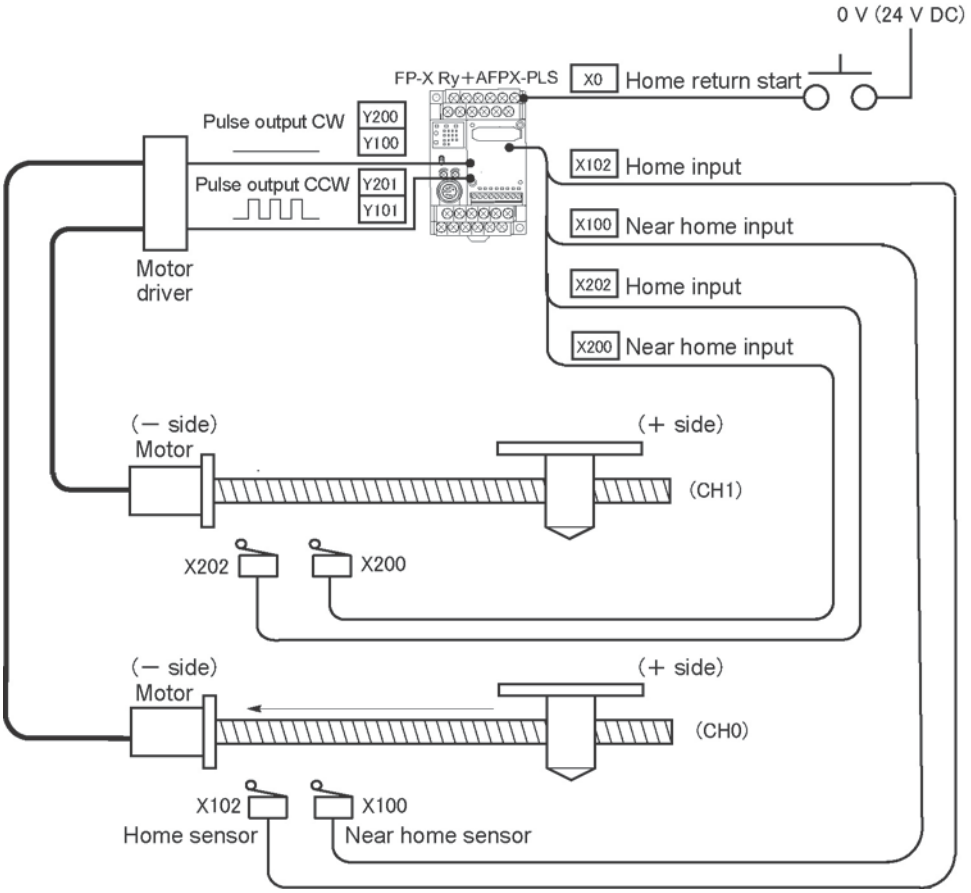

Ramco National www.PanasonicSensors.com 1-800-280-6933

Program

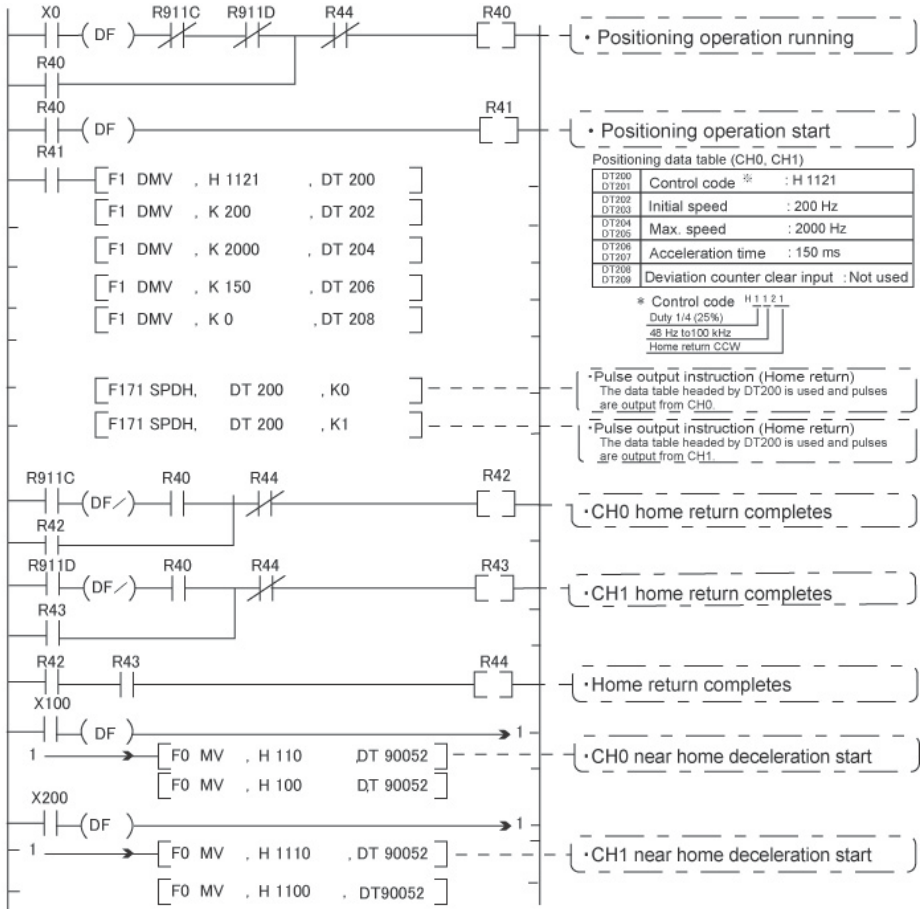

Key Point:

As there is not interpolation function for the home return, the home return should be executed for each channel. After the home return for both channels is completed, the positioning operation running program (R40) turns off.

Pulse output diagram

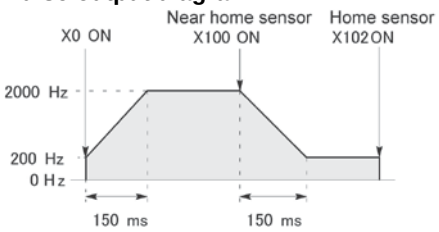

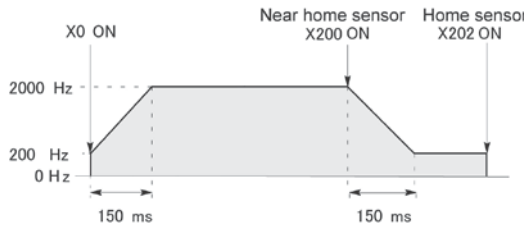

Ramco National www.PanasonicSensors.com 1-800-280-6933

10.5 PWM Output Function (Pulse I/O Cassette)

10.5.1 Overview of PWM Output Function

PWM output function

With the F173 (PWMH) instruction, the pulse width modulation output of the specified duty ratio is obtained.

System register setting

When using the PWM output function, set the channel CH0 and CH1 with system registers 400 and 401 to “Use output Y0 (Y3) as PWM output”.

Note:

With the FP-X Ry type, the pulse I/O cassette (AFPX-PLS) is necessary to use the pulse output function.

10.5.2 Instruction to be Used for PWM Output Function

PWM Output Instruction F173

While X6 is in the on state, a pulse with a period of 502.5 ms and duty ratio of 50% is output from Y100 of specified channel "CH0". When the program runs, the data table will be as shown below.

Data table

DT100	Control code *1	: K1
DT101	Duty *2	: 50%

***1: Specify the control code by setting the K constant.**

Resolution of 1000

K	Frequency (Hz)	Period (ms)
K0	1.5	666.67
K1	2.0	502.51
K2	4.1	245.70
K3	6.1	163.93
K4	8.1	122.85
K5	9.8	102.35
K6	19.5	51.20
K7	48.8	20.48
K8	97.7	10.24
K9	201.6	4.96
K10	403.2	2.48
K11	500.0	2.00
K12	694.4	1.44
K13	1.0 k	0.96
K14	1.3 k	0.80
K15	1.6 k	0.64
K16	2.1 k	0.48
K17	3.1 k	0.32
K18	6.3 k	0.16
K19	12.5 k	0.08

Resolution of 100

K	Frequency (Hz)	Period (ms)
K20	15.6 k	0.06
K21	20.8 k	0.05
K22	25.0 k	0.04
K23	31.3 k	0.03
K24	41.7 k	0.02

Ramco National www.PanasonicSensors.com 1-800-280-6933

***2: specification of duty (specify using K constant)**
If the control code is K0 to K19, the duty is K0 to K999 (0.0% to 99.9%).

If the control code is K20 to K24, the duty is K0 to K990 (0% to 99%).
Values are specified in units of 1% (K10) (digits behind the decimal point are rounded off).

Note:

- If a value outside the specified range is written to the duty area while the instruction is being executed, a frequency corrected to the maximum value is output. If written when instruction execution is started, an operation error is occurred.

Ramco National www.PanasonicSensors.com 1-800-280-6933

Chapter 11

Security Functions

11.1 Type of Security Functions

There are mainly three functions as the security function of the FP-X.
It is possible to rewrite data during any of these functions is being used.

1: Password protect function
It is used to restrict the access to the programs in the FP-X from the programming tool by setting a password. Writing and reading ladder programs or system registers will be unperformable by setting a password and setting to the protect mode.
There are two types of passwords as below.

- **4-digit password: 4 characters of 16 characters that are "0" to "9" and "A" to "F" can be used.**
- **8-digit password: A maximum of 8 English one byte characters (case-sensitive) and symbols can be used.**

2: Upload protection
Ladder programs or system registers cannot be uploaded from the FP-X by setting that the program is not uploaded. As transferring programs to the master memory cassette as well as the programming tool will be unperformable, it ensures higher security.

3: Password protect function and upload protection for FP memory loader
Those functions are available only when using the FP-X V2.5 or later, FP memory loader V2.0 or later and FPWIN GR V2.8 or later and when setting a 8-digit password.

Reference: <11.4 Setting Function for FP Memory Loader>

The state of the security can be checked at two displays of the programming tool FPWIN GR.
1. Select [Online Edit Mode] under the [Online] on the menu bar, or press the [CTRL] and [F2] keys at the same time, to switch to the [Online] screen.
2. Select "Security information" or "Set PLC Password" under "Tool" on the menu bar.

The following displays will be shown.

Security information dialog box

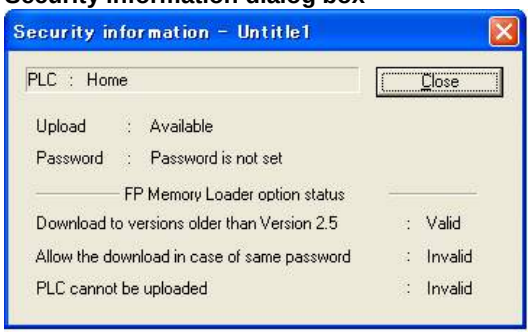

Set PLC Password dialog box

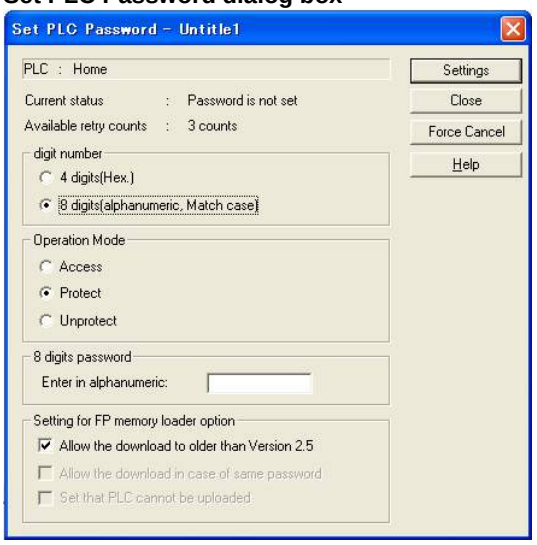

Ramco National www.PanasonicSensors.com 1-800-280-6933

11.2 Password Protect Function

This function is used to prohibit reading and writing programs and system registers by setting a password on the FP-X.
There are two ways to set a password as below.

1. Sets using the programming tool.
2. Sets using an instruction (SYS1 instruction).

Note: Precautions on the password setting

Do not forget your password. If you forget your password, you cannot read programs. (Even if you ask us for your password, we cannot crack it.)

11.2.1 Password Setting

Setting using FPWIN GR

1. Select [Online Edit Mode] under the [Online] on the menu bar, or press the [CTRL] and [F2] keys at the same time, to switch to the [Online] screen.
2. Select or “Set PLC Password” under “Tool” on the menu bar. The following display will be shown.

Security information dialog box

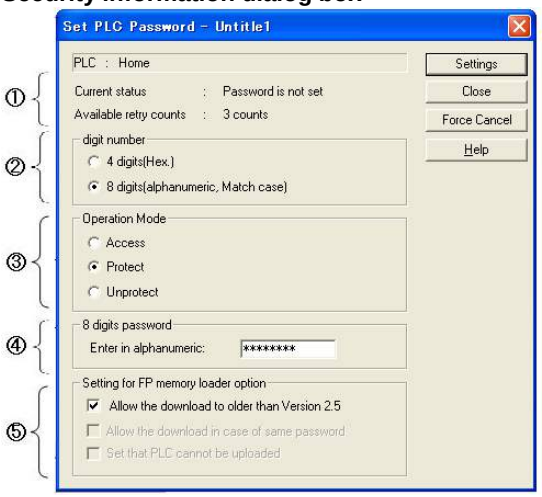

① Indicates the current status of the password setting.
② Specify the type of the password to be used.
③ Specify an operation mode.
Access: Accesses programs by inputting a password.
Protect: Sets a password.
Unprotect: Releases the password setting.
④ Input a password.
⑤ Optional setting for FP memory loader
Use the FP-X V2.5 or later and FPWIN GR V2.8 or later, and set it to download to the FP memory loader (Ver2.0 or later).

Confirmation the contents of the password setting
Confirm the settings indicated in the dialog box.

Current status
Indicates the current status of the password setting. There are following five statuses.

1. Password is not set	: Password is not set.
2. 4 digits Protect	: Password is 4-digit password, and access is prohibited.
3. 4 digits Available to access	: Password is 4-digit password, and access is allowed. (The status that inputting the password completes and that can access programs.)
4. 8 digits Protect	: Password is 8-digit password, and access is prohibited.
5. 8 digits Available to access	: Password is 8-digit password, and access is allowed. (The status that inputting the password completes and that can access programs.)

Ramco National www.PanasonicSensors.com 1-800-280-6933

Available retry counts

This is the number of times that you can input the password in succession. Every time incorrect password is input, the number will decrease (up to 3 times).

If you fail to input the correct password for 3 times in succession, you cannot access the program.

Turn the power supply of the FP-X off and then on again to try to input the password again.

Note:

If the power supply of the PLC is turned on/off with the setting that the access is allowed, the setting will be that the PLC is protected again.

Setting the Password protect function

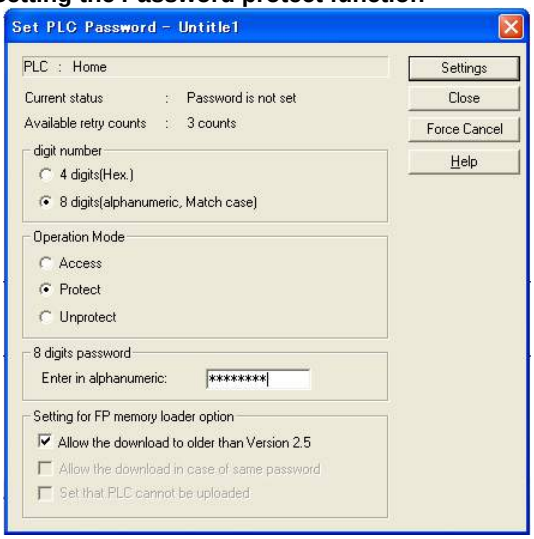

As the dialog box is shown, select as below.

Digit number:
Select “4 digits” or “8 digits”.

Operation Mode:
Select “Protect”.

4 digits (or 8 digits) password:
Input a password to be set.

Click “Settings”.

Input the password for confirmation again, and click [OK].

The setting has completed.

Ramco National www.PanasonicSensors.com 1-800-280-6933

Setting to allow the access to the program by inputting a password

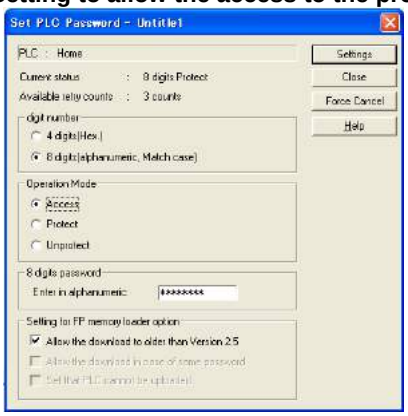

As the dialog box is shown, select as below.

Digit number:
Select “4 digits” or “8 digits”.

Operation Mode:
Select “Access”.

4 digits (or 8 digits) password:
Input a password to be set.

Click “Settings”.

The setting has completed.

Note:
If the power supply of the PLC is turned on/off with the setting that the access is allowed, the setting will be that the PLC is protected again.

How to cancel the password setting

Following two methods are available to cancel the password setting.

	Description	Program
Unprotect	Cancels the registered password to be specified.	All programs are retained.
Force cancel	Erases all programs and security information to cancel the setting forcibly.	All programs are deleted. (The upload protection setting is also deleted.)

Releasing the protection of PLC (Programs are retained.)

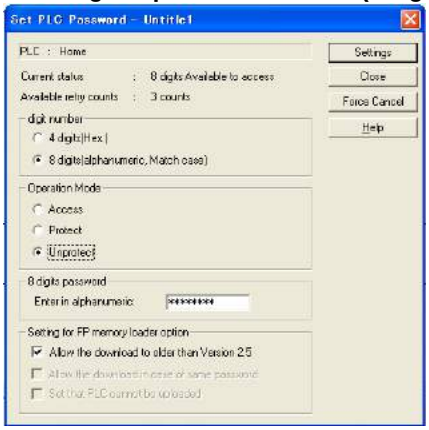

As the dialog box is shown, select as below.

Digit number:
Select “4 digits” or “8 digits”.

Operation Mode:
Select “Unprotect”.

4 digits (or 8 digits) password:
Input a password to be set.

Click “Settings”.

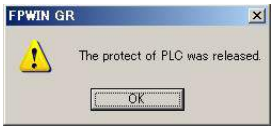

Click [OK].

Note) The protection cannot be released if the access is not allowed.

Ramco National www.PanasonicSensors.com 1-800-280-6933

Executing the force cancel (Programs and security information are all deleted.)

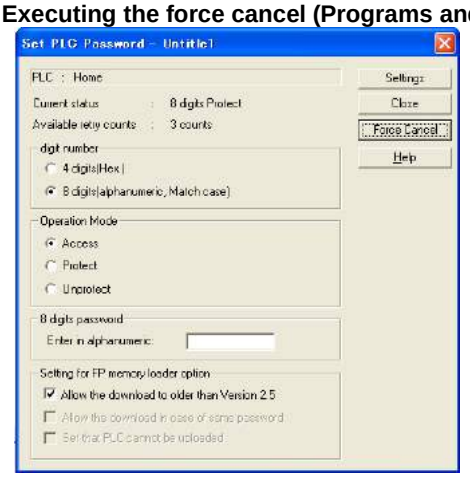

Click [Force cancel].

Click [Yes].

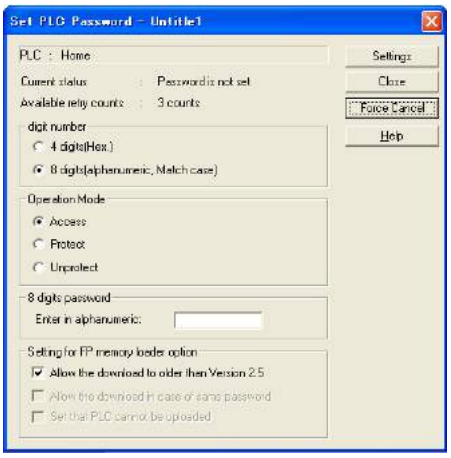

If the current status is “Password is not set”, this procedure has completed.
All programs and security information were deleted.

About the password data of the master memory cassette (AFPX-MRTC)

The data on the password setting can be transferred to the master memory cassette together with the programs from the FP-X.

The password information stored in the master memory cassette will be automatically transferred to another control unit when it is installed, and the control unit will be protected.

The procedure of the transfer to the master memory is as below.

1. Turn off the power supply of the PLC, and set the RUN/PROG mode switch to the PROG mode. Install the master memory cassette to transfer the program on the control unit.
2. 2. Turn on the power supply of the PLC, and transfer the program to the master memory cassette using “Internal memory => Master memory” in the programming tool.

Reference:

For the information on the transmission to the master memory cassette,
<12.2.2 Master Memory Function>

Ramco National www.PanasonicSensors.com 1-800-280-6933

11.3 Upload Protection

This function is to prohibit reading programs and system registers by setting to disable program uploading on the FP-X.
If the FP-X is set to prohibit program uploading, note that the ladder programs and system registers will be disabled to be uploaded after that.
However, editing the files that are controlled with a PC can be carried out online using the programming tool. Note that the programs will be broken if the programs are not absolutely matched.
When using this function, store ladder programs as files without fail.

Unperformable operations on the FP-X set to prohibit uploading
1. Uploading ladder programs and system registers to PCs
2. Transferring programs to the master memory cassette and FP memory loader
The setting for this function can be cancelled using the programming tool, however, all ladder programs, system registers and password information will be deleted when the setting is cancelled.

Note: When cancelling this setting forcibly:
All programs and security information will be deleted when the upload protection setting is cancelled.
We cannot restore the deleted programs even if you ask us.
We cannot read the data of the control units that are set to prohibit uploading.

Keeping your programs is your responsibility.

Interaction with the password protect function
The password setting can be specified for the FP-X that this function is set at the same time.
Also, this function can be specified for the FP-X that a password is set.

11.3.1 Upload Protection Setting

Following two methods are available to set the upload protection.

1. Set in the control unit using the programming tool.
2. Specify the information on the upload protection in the master memory cassette, and set in the control unit.

Setting using FPWIN GR
1. Select [Online Edit Mode] under the [Online] on the menu bar, or press the [CTRL] and [F2] keys at the same time, to switch to the [Online] screen.
2. Select or “Upload settings” under “Tool” on the menu bar. The following display will be shown.

Select “Set that PLC cannot be uploaded”.

Click “Execute”.

Ramco National www.PanasonicSensors.com 1-800-280-6933

Specifying the information on upload protection in the master memory cassette

Programs cannot be transferred from the FP-X prohibited uploading to the master memory cassette.

The upload protection can be set to the master memory cassette from the FP-X that is not prohibited uploading using the “Internal memory to Master memory” function of the programming tool.
At that time, if there is the information on the password protect, it will be transferred simultaneously.
If the master memory cassette that is prohibited uploading is installed on another FP-X, the information on the settings will be transferred to the FP-X automatically, therefore, that FP-X will be prohibited uploading as well.

Reference: For the information on the transmission to the master memory cassette,
<12.2.2 Master Memory Function>

Cancelling the upload protection using the programming tool
Setting using FPWIN GR

1. Select [Online Edit Mode] under the [Online] on the menu bar, or press the [CTRL] and [F2] keys at the same time, to switch to the [Online] screen.
2. Select “Upload settings” under “Tool” on the menu bar.

The following displays will be shown.

Upload settings dialog box

Select “Release the upload-protection by compulsion”.
Click “Execute”.

Set PLC Password dialog box

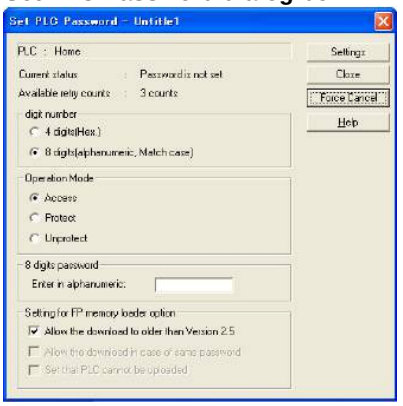

Click “Force Cancel”.

Note:

1. If the setting for the upload protection is cancelled, **all ladder programs, system registers and password information will be deleted.**
2. If “Force Cancel” is executed in the setting for PLC password, the setting for the upload protection will be also cancelled.

Note: When cancelling this setting forcibly:

All programs and security information will be deleted when the upload protection setting is cancelled.
We cannot restore the deleted programs even if you ask us.
We cannot read the data of the control units that are set to prohibit uploading.

Keeping your programs is your responsibility.

Ramco National www.PanasonicSensors.com 1-800-280-6933

11.4 Setting Function for FP Memory Loader

The following three functions of the FP memory loader (AFP8670/AFP8671) can be set through the FP-X.

The setting will be effective when it is transferred to another FP-X after the upload to the FP memory loader from the set FP-X.

Setting conditions
- **FP-X V2.5 or later**
- **FP memory loader V2.0 or later**
- **FPWIN GR V2.8 or later**
- **8-digit password is set.**

11.4.1 Download Protection Setting to Previous Versions (Allow the download to older than Version 2.5)

This is a function to disable the download from the FP-X V2.5 or later to the FP-X older than V2.5 for enhanced security.
When setting the download to be enabled, the download can be performed regardless of the version of FP-X, however, the limited distribution and upload protection settings cannot be used.

11.4.2 Limited Distribution Function (Allow the download in case of same password)

When downloading a program from the memory loader, the program can be downloaded only when the program stored in the memory loader matches the password set for the PLC with this function enabled.

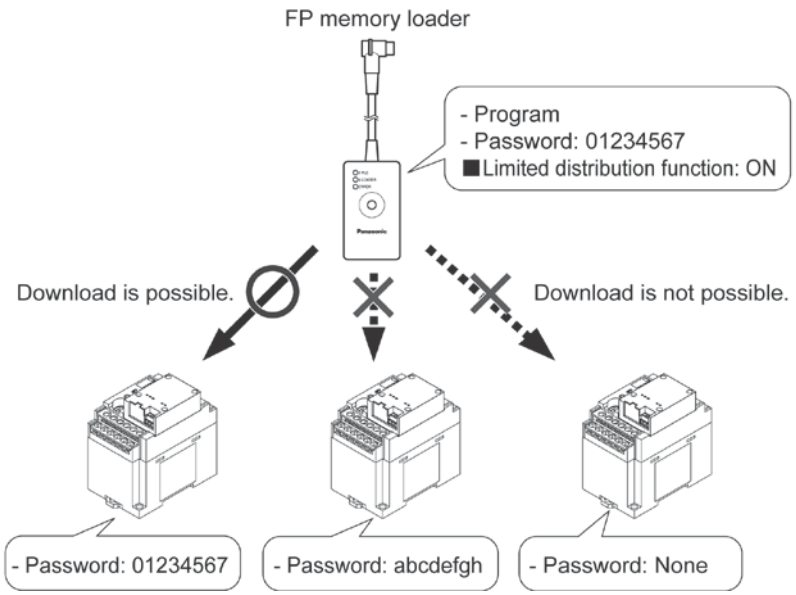

Note: This function cannot be used when the setting to disable the download to the FP-X older than V2.5 has not been made.

Ramco National www.PanasonicSensors.com 1-800-280-6933

11.4.3 Upload Protection Setting Function (Set that PLC cannot be uploaded)

If this function is valid, the PLC will be in the upload protection state by downloading a program to the PLC from the FP memory loader.

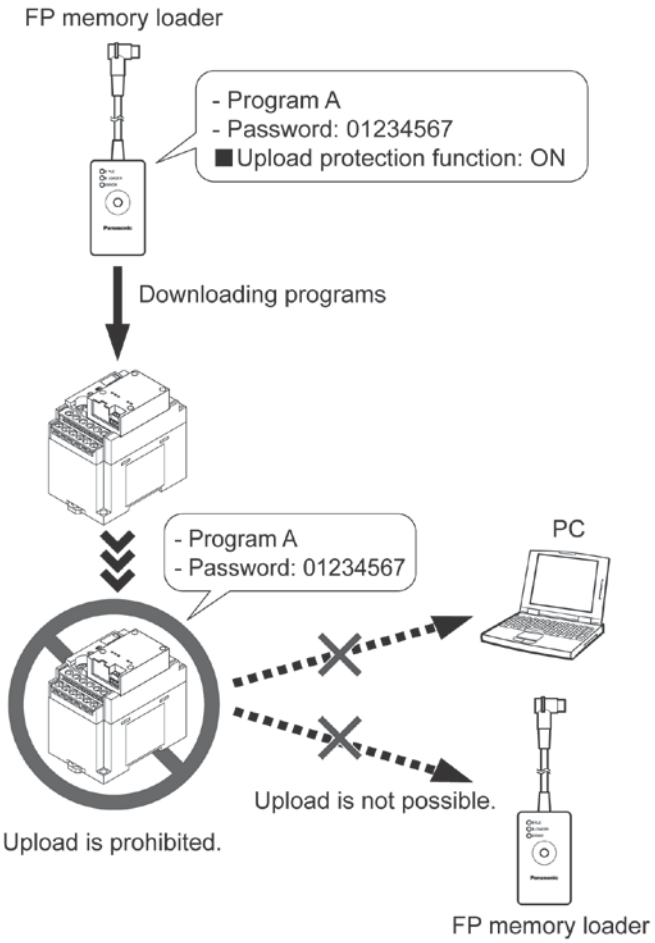

Note: This function cannot be used when the setting to disable the download to the FP-X older than V2.5 has not been made.

Ramco National www.PanasonicSensors.com 1-800-280-6933

11.4.4 Version Check List

Version check list

State of target PLC to be written Program in FP memory loader		PLC version to be written	Password Not set	4 digits Protected	8 digits Protected	8 digits Protected Note4)
FP-X All versions	- No password or - 4-digit or 8-digit password	V2.40 or older	○ Note1)	○	×	×
		V2.50 or later	○	○	○	○ Note1)
FP-X Ver2.50 or later	- 8-digit password and - Download prohibition to old ver.	V2.40 or older	×	×	×	×
		V2.50 or later	○ Note1)	○ Note1)	○ Note1)	○
	- 8-digit password and - Download protection to old ver. and - Download permission only for models with same password.	V2.40 or older	×	×	×	×
		V2.50 or later	×	×	● Note1)	●
	- 8-digit password and - Download protection to old ver. and - Upload protection	V2.40 or older	×	×	×	×
		V2.50 or later	○ Note1)	○ Note1)	○ Note1)	○ Note2)
	- 8-digit password and - Download protection to old ver. and - Download permission only for models with same password and - Upload protection	V2.40 or older	×	×	×	×
		V2.50 or later	× Note5)	× Note5)	● Note1)	●

○ : Download possible ● : Download possible only for models with same password

× : Download impossible -: No target model

Note1) Program downloading is not possible for FP memory loader Ver.1.*.

Note2) Upload protection cannot be set for FP memory loader Ver.1.*.

Note3) When downloading programs with 8-digit password, FP memory loader Ver.1.* will not enter protection state after downloading finishes. To enter protection state, turn off the power and then turn it on again.

Note4) The state that the setting has been made not to disable downloading to the old version on the FP-X Ver.2.50 or later .

Note5) When transferring data from FP memory loader to PLC, program data cannot be transferred by Ver. 2 or later, however, only the "Upload protection" setting is effective.

Status of PLC that program has been downloaded

downloading a program to the PLC from the FP memory loader, the password that has been already set on the unit may be changed. Note the followings.

Status of FP memory loader	Password setting for PLC after download
No password setting	The password will be cleared.
4-digit password setting	The password will be overwritten with a new 4-digit password.
8-digit password setting	The password will be overwritten with a new 8-digit password.
8-digit password setting Limited distribution setting: Off	The password will be overwritten with a new 8-digit password.
8-digit password setting Limited distribution setting: On	The password will not change. (The program itself will not be downloaded.)

Ramco National www.PanasonicSensors.com 1-800-280-6933

11.4.5 Setting using FPWIN GR

1. Select [Online Edit Mode] under the [Online] on the menu bar, or press the [CTRL] and [F2] keys at the same time, to switch to the [Online] screen.
2. Select or “Set PLC Password” under “Tool” on the menu bar. The following display will be shown.

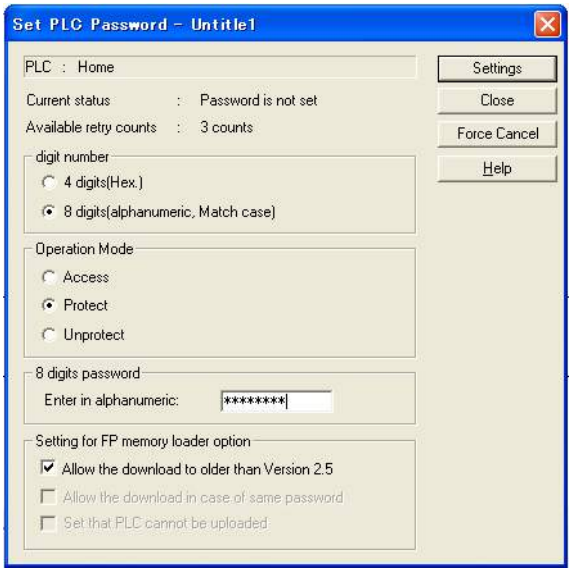

1. Select "8 digits" for "Digit number".

2. Uncheck "Allow the download to older than Version 2.5" in "Setting for FP memory loader option".

3. Check the functions to be used of "Options for FP memory loader".

- Limited distribution function
→”Allow the download in case of same password”

- Enable the upload protection setting.
→ ”Set that PLC cannot be uploaded”

4. After setting the above check box, input a 8-digit password, and then click "Setting". The setting has completed.

Note) This function is available only when the version of FP-X is Ver2.5 or later and a 8-digit password has been set.

Ramco National www.PanasonicSensors.com 1-800-280-6933

11.5 Table of Security Settings/Cancel

When setting the security on FP-X control unit

When the master memory cassette is not installed on the FP-X control unit

		Status of security			
		Security not set	**Upload protection**	**4-digit password**	**8-digit password**
Sets/ Cancels	Upload protection	A		A	A
	4-digit password	A	A		N/A
	8-digit password	A	A	N/A	

When the master memory cassette is installed on the FP-X control unit

		Status of security			
		Security not set	**Upload protection**	**4-digit password**	**8-digit password**
Sets/ Cancels	Upload protection	N/A		N/A	N/A
	4-digit password	N/A	N/A		N/A
	8-digit password	N/A	N/A	N/A	

A: Available, N/A: Not available

Ramco National www.PanasonicSensors.com 1-800-280-6933

Chapter 12

Other Functions

12.1 Transfer Function between Memories

Flow of program information

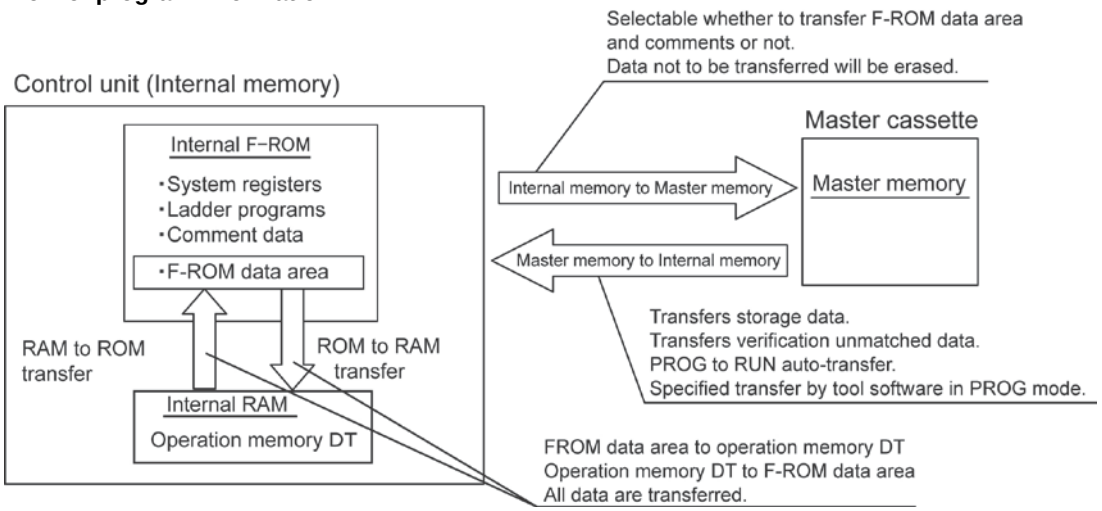

RAM to ROM transfer function

All points of the contents of the DT in the internal RAM are transferred to the internal F-ROM data area. This function is used to transfer large volumes of the default data to be used on the DT. The necessary data is read from the internal F-ROM area to be used for ladder programs. This function is only available by using the programming tool software in the PROG mode. In this case, data can be transferred in both cases when the master memory cassette is installed, and it is not installed.

ROM to RAM transfer function

All points of the contents of the F-ROM data area stored in the internal ROM are read to the operation memory DT. This function is only available by using the programming tool software in the PROG mode. In this case, data can be transferred in both cases when the master memory cassette is installed, and it is not installed.

Internal memory to Master memory transfer function

The program information (such as ladder programs, system registers, F-ROM data, comments and passwords) stored in the internal ROM is transferred to the master memory. The upload disabled information is specified using the programming tool software.
It is selectable to transfer the F-ROM data area and comments with the programming software or not.
When transferring the F-ROM data area, specify the block number that starts transferring and the number of blocks. This function is only available by using the programming tool software in the PROG mode.
When data is transferred to the master memory, the data not to be transferred will be erased.

Master memory to Internal memory transfer function

The information stored in the master memory is transferred to the internal ROM when the PROG mode is changed to the RUN mode, when the power supply is turned on in the RUN mode, or when the transfer instruction is executed by then programming tool software in the PROG. mode.
Nonexistent data is not transferred.
Once the data is transferred, afterwards, the information in the internal memory and the master memory are compared, and the matched information is not transferred.

Key Point: Selectable using FPWIN GR

(Select from [Tool] of the menu in the PROG mode or online monitor mode.)

Reference: <FPWIN GR Operation Guide Book ARCT1F332E>

Ramco National www.PanasonicSensors.com 1-800-280-6933

12.2 Function of Master Memory Cassette

The clock/calendar to set year, month, day, day of week and time, and **the master memory** is equipped in the master memory cassette.

The following 2 methods can be selected with the switch at the back.

1. Clock/calendar only (default setting)
2. Clock/calendar + Master memory

Note:
It cannot be used as master memory when it has been specified to be used as clock/calendar only.

Install the optional battery in the control unit to use the clock/calendar.
The clock/calendar does not work without the battery.

12.2.1 Clock/Calendar Function

The clock/calendar function can be used if the backup battery is attached in the FP-X and the FP-X master memory cassette (AFPX-MRTC) is installed.
Note that this function cannot be used without the backup battery.

Reference: <5.9 Installation and Setting of Backup Battery>

Specifications

Item		Specifications
Clock/calendar	Setting items	Year, month, day hour (24-hour display), minute, second and day of week
	Accuracy	At 0 °C: less than 104 seconds per month At 25 °C: less than 51 seconds per month At 55 °C: less than 155 seconds per month

Area of clock/calendar
With the clock/calendar function, data indicating the hour, minute, second, day, year and other information stored in the special data registers DT90053 to DT90057 can be read using the transmission instruction and used in sequence programs.

A: Available, N/A: Available

Special data register No.	Higher bytes	Lower bytes	Read	Write
DT90053	Hour data H00 to H23	Minute data H00 to H59	A	N/A
DT90054	Minute data H00 to H59	Second data H00 to H59	A	A
DT90055	Day data H01 to H31	Hour data H00 to H23	A	A
DT90056	Year data H00 to H99	Month data H01 to H12	A	A
DT90057	-	Day-of-the-week data H00 to H06	A	A

Ramco National www.PanasonicSensors.com 1-800-280-6933

Setting of clock/calendar

There are two ways to set the clock/calendar, as described below.

Setting using FPWIN GR

1. Select [Online Edit Mode] under the [Online] on the menu bar, or press the [CTRL] and [F2] keys at the same time, to switch to the [Online] screen.
2. Select “Set PLC Date and Time” under “Tool” on the menu bar.

Set PLC Date and Time dialog box

The above steps display the “Set PLC Date and Time dialog box” shown at the left. Input the date and time, and click on the “OK” button.

Setting and changing using program

1. The values written to the special data registers DT90054 to DT90057, which are allocated as the clock/calendar setting area, are sent..
2. A value of H8000 is written to DT90058.

Note) The value can be sent using the differential instruction “DF”, or by changing H8000 to H0000. Do not always write H8000.

Example showing the date and time being written

Set the time to 12:00:00 on the 5th day when the X0 turns on.

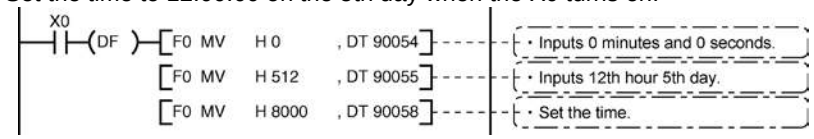

Note:

No values have been set in the default settings, so the programming tool or another means must be used to specify the values.

Example showing the clock/calendar being used

Sample program for fixed schedule and automatic start

In the example shown here, the clock/calendar function is used to output (Y0) signal for one second, at 8:30 a.m. every day.

Here, the “Hour/minute” data stored in the special data register DT90053 is used to output the signal at the appointed time.

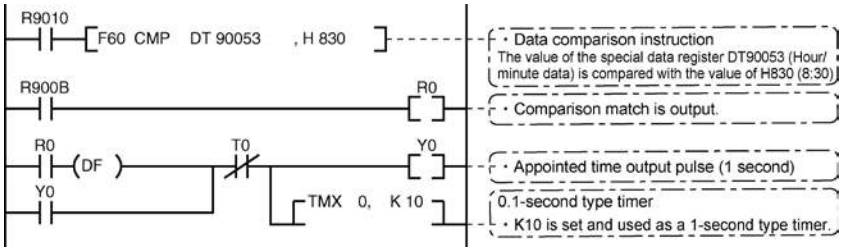

The hour data is stored in the upper 8 bits of DT90053 and the minute data in the lower 8 bits, in the BCD format. This hour and minute data is compared with the appointed time (BCD), and the R900B (=flag) special internal relay is used to detect whether or not it matches the appointed time.

30-second compensation

The compensation for 30 seconds is performed in the DT90058.

Ramco National www.PanasonicSensors.com 1-800-280-6933

12.2.2 Master Memory Function

Overview

This function enables to transfer the data in the control unit (internal memory) such as programs to the master memory cassette, and to copy them into another control unit (internal memory) by installing the master memory cassette on it.

• Following data can be transferred to the master memory cassette.

1. Ladder programs
2. System registers
3. Comments
4. F-ROM data area
5. Security information (Password or uploading disabled information)
When there is no security information, no security information exists.

Change the switch on the back of the master memory cassette

The changeover switch is located at the back of the FP-X master memory cassette (AFPX-MRTC).
The default setting is “Clock/calendar only”.

Transfer from the master memory to the control unit

There are two ways to transfer data.

1. Operation using the FPWIN GR
Transferring is available in the PROG mode only.
2. Automatic transfer: when the PROG mode was changed to the RUN mode
When the power supply turns on (when started in the RUN mode)

Transferring using the FPWIN GR

1. Select [Online Edit Mode] under the [Online] on the menu bar, or press the [CTRL] and [F2] keys at the same time, to switch to the [Online] screen.
2. Select “Internal memory => Master memory” under “Tool” on the menu bar.

Internal memory ⇔ Master memory dialog box

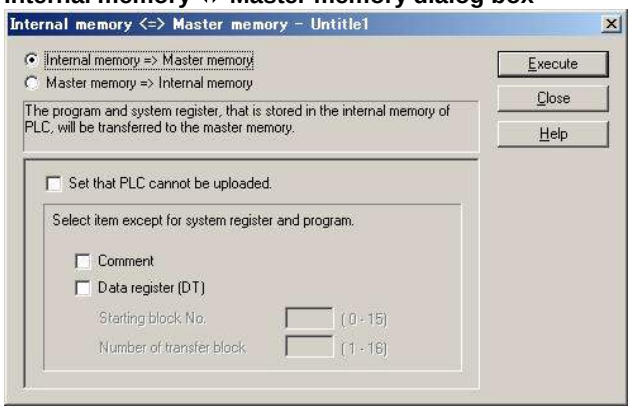

Select either “Internal memory => Master memory” or “Master memory => Internal memory”.

Transferring is available in the PROG mode only.

Ramco National www.PanasonicSensors.com 1-800-280-6933

Select the data to be simultaneously transferred with programs and registers

Following three data can be transferred at the same time.
(Internal memory: Memory in the control unit)

	Internal memory to Master memory	Master memory to Internal memory
Upload protection	Sets a master memory cassette to the upload protection setting. The control unit that data is transferred with this master memory cassette mounted will be also set to the upload protection setting.	(Cannot be selected)
Comments Note2)	Transfers comments to the master memory cassette.	Transfers comments to the control unit.
F-ROM data area Note2) Note3)	Transfers the data in the F-ROM data area of the control unit (internal ROM) to the master memory cassette. Specify the starting block No. and No. of blocks to be transferred.	Transfers data registers to the F-ROM data area in the control unit (internal ROM). Specify the starting block No. and No. of blocks to be transferred.
Precautions	The data in the master memory is all deleted. So the devices not to be transferred will be deleted.	Once the data is transferred, afterwards, the information in the internal memory and the master memory are compared, and the matched information is not transferred.

Note1) When a password has been specified, data is transferred automatically.
Note2) If there is no data, transferring cannot be performed.
Note3) Reads using the F12 (ICRD) instruction and writes using the P13 (ICWT) instruction.
(It is possible to write data in the F-ROM data area using the RAM => ROM transfer function of the FPWIN GR.)
The storage area is composed of 16 blocks (1 block = 2048 words) that are from the blocks No. 0 to No. 15.

Reference: For the details on the F12 (ICRD) and P13 (ICWT) instructions,
<Programming Manual ARCT1F353>

12.2.3 Relation between Security Setting and Transmission

	Status of FP-X (master memory cassette is installed)		
	Security not specified	**Uploading disabled**	**4-digit and 8-digit passwords**
Transmission from the internal memory to master memory	A	N/A	A
Transmission from the master memory to internal memory	A	A	A

A: Available, N/A: Available

Ramco National www.PanasonicSensors.com 1-800-280-6933

12.2.4 Handling of Master Memories Created with Different Models

			PLC that created master memory					
			Ry type			Tr type		
			C14	C30	C60	C14	C30	C60
Installed PLC	Ry type	C14	A	△	△	E25	E25	E25
		C30	A	A	A	E25	E25	E25
		C60	A	A	A	E25	E25	E25
	Tr type	C14	E25	E25	E25	A	△	△
		C30	E25	E25	E25	A	A	A
		C60	E25	E25	E25	A	A	A

A: Can be installed and operated.
△: Can be installed depending on the program capacity.
E25: Master memory model unmatch error

Note1) If the E25 occurs, the mode will not be the RUN.
Also, the transfer operation from the master memory to the internal memory of the controller will not be executed.
The transfer operation from the internal memory of the controller to the master memory can be executed even if the E25 occurs.
Note2) If the version of the Ry type is older than Ver2.0, the E26 (User's ROM error) is detected not the E25.
Note3) Use the tool software to execute the program conversion between different models.

Ramco National www.PanasonicSensors.com 1-800-280-6933

12.3 P13 (ICWT) Instruction

Data registers of 32765 words can be stored and used in the built-in ROM (F-ROM data area) of the FP-X control unit using the P13 (ICWT) instruction.

However, note the followings for the use:

1. Restrictions on the number of writing
Writing can be performed within 10000 times. If writing continues for more than that, the correct operation cannot be guaranteed.

2. The power supply turns off when the P13 (ICWT) instruction is being executed.
If the power supply turns off during this instruction is being executed, the hold type area may not be kept. (Also, when the power is shut off during rewriting in the RUN mode, the same event may occur.)

Ramco National www.PanasonicSensors.com 1-800-280-6933

12.4 Analog Potentiometer

12.4.1 Overview of Analog Potentiometer

The FP-X is equipped with two analog potentiometers (four for C60 only) as a standard feature. Turning the potentiometers changes the values of the special data registers DT90040 to DT90044 within a range of K0 to K1000.
Using this function makes it possible to change the internal set values in the PLC without using the programming tool, so this can be used, for example, with analog clocks, to change the set value externally by turning the potentiometer.

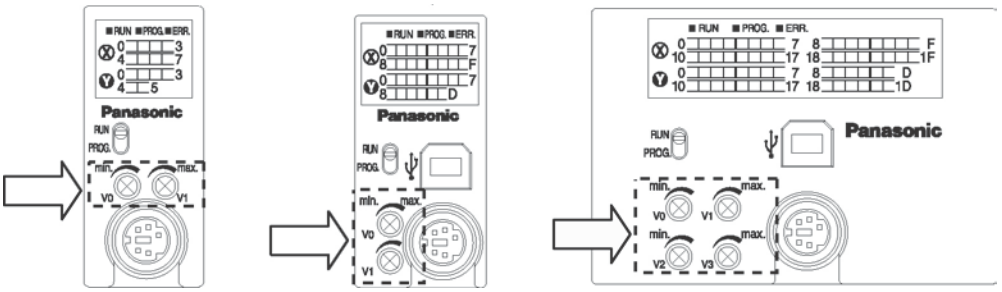

Applicable special data register

Symbol	Potentiometer No.	Special data register	Range of values	Control unit
V0	Volume 0	DT90040	K0 to K1000	C14/C30
V1	Volume 1	DT90041		
V2	Volume 2	DT90042		C60
V3	Volume 3	DT90043		

12.4.2 Example Showing How to Use Analog Potentiometer

The FP-X is provided with special data registers, in which the values in the registers change in response to the analog potentiometers being moved. If the values of these registers are sent to the clock setting value area, a clock can be created that allows the time to be set using the potentiometer.

Example: Writing of the clock setting value
The value of the special data register (DT90040) that corresponds to the analog potentiometer V0 is sent to the setting value area (SV0) of TMX0 to set the time for the clock.

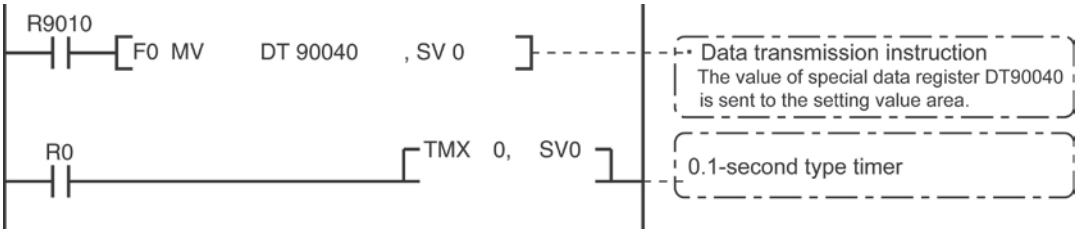

Ramco National www.PanasonicSensors.com 1-800-280-6933

12.5 Sampling Trace Function

12.5.1 Overview

The FP-X control unit Ver2.0 and later versions support the sampling trace function.
Using this function enables to take samplings and record (accumulate) the state of arbitrary data of 16 bits + 3 data registered in the PLC at an arbitrary timing, and to examine the changes in the bit and data in details after stopping sampling at an arbitrary timing.

The sampling trace function is used in the time chart monitor function under the online menu of the FPWIN-GR.

The instructions, functions, special relays and special registers related to the sampling trace function are as below.
F155(SMPL) sampling instruction
F156(STRG) sampling stop trigger instruction
Time charge monitor of FPWIN GR

R902C	: Sample point flag	OFF=Sampling by instruction ON=Sampling at regular time intervals
R902D	: Sampling trace end flag	When sampling trace starts=0 stops=1
R902E	: Sampling trigger flag	Turns on when sampling stop trigger is on.
R902F	: Sampling enable flag	Turns on when sampling operation starts.
DT90028	: Interval of sampling trace	k0=For sampling by instruction k1 to k3000 (10ms to 30 seconds) For sampling at regular time intervals

12.5.2 Details of Sampling Trace Function

No. of data collectable at one sampling: 16 bits +3 data
Sampling capacity (No. of samples accumulable) : C14=300 samples
: C30/C60=1000 samples
Types of sampling timing (When an instruction is executed, or at regular time intervals)
1: Sampling at regular time intervals From 10 ms
2: Sampling by F155(SMPL) instruction

Sampling for every scan can be executed by the instruction.
Also, more than one samplings can be executed in one scan.
Timing for the execution of the F155(SMPL) instruction can be set by the ladder sequence.

Note: It is not possible to activate the sampling at regular time intervals and the sampling by the F155(SMPL) instruction simultaneously.

How to stop sampling
Methods of the stop trigger (request): Following two methods are available.

1. Deactivate request by the tool software
2. Deactivate request by the F156(STRG) instruction

If the stop trigger activates, the PLC will continue to take samplings for the specified No. of delay, and then stop the sampling operation. Once the sampling operation stops, the data will be automatically retrieved by the tool software and will be indicated in a time chart.
It is possible to adjust whether to see before or after the trigger point by the setting of the No. of delay.

Ramco National www.PanasonicSensors.com 1-800-280-6933

Operation image of sampling trace

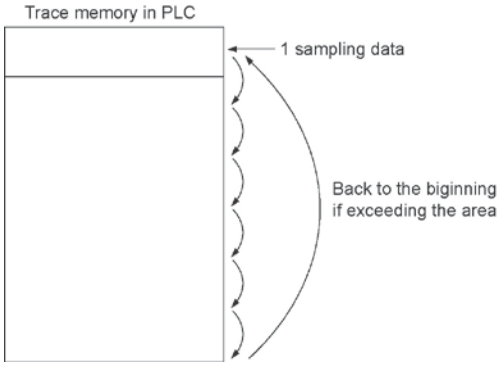

12.5.3 How to Use Sampling Trace

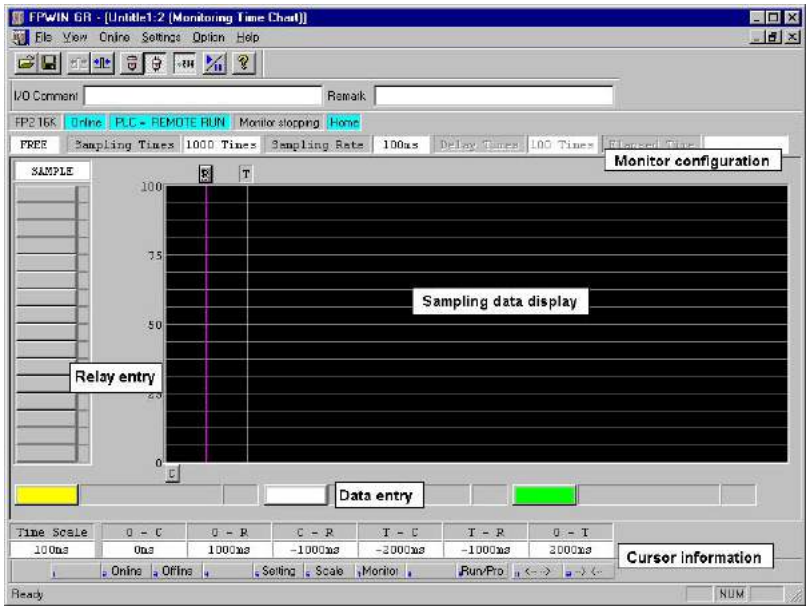

1. Sampling at regular time intervals

(1) Register the bit/word device to be monitored by the time chart monitor function of FPWIN-GR.

(2) Specify the sampling configurations.

Set the mode of the sampling configurations to “Trace”.

Set the sampling rate (time).

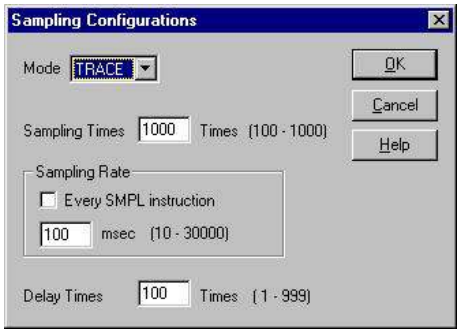

Ramco National www.PanasonicSensors.com 1-800-280-6933

(3) Start monitoring. Start with the button.

2. Sampling by instruction

(1) Register the bit/word device to be monitored by the time chart monitor function of FPWIN-GR.

(2) Specify the sampling configurations.

Set the mode of the sampling configurations to “Trace”.

Set the sampling rate (time) to 0.

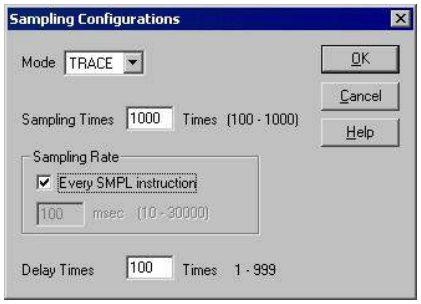

3. Read data by trigger

(1) Stop sampling by stopping monitoring the trace that has been started in the above procedure 1 or 2 on the time chart display of FPWIN-GR. The data will be indicated in the time chart.

Stop monitoring. (Stop with the button, stop by the “Trigger Break” in the menu, or stop by the F156 instruction.)

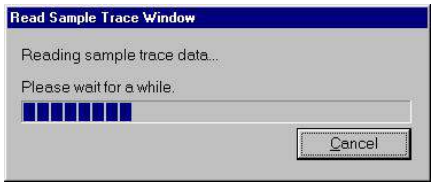

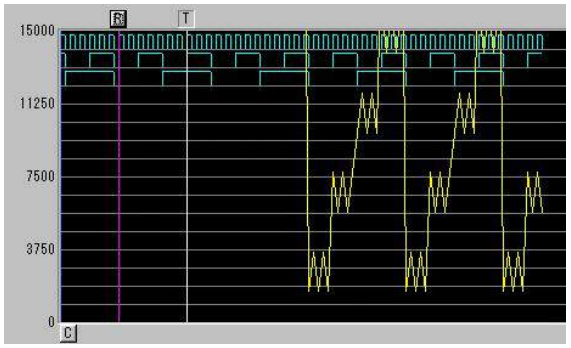

Reference: <FPWIN GR Help>

Ramco National www.PanasonicSensors.com 1-800-280-6933

12.6 Time Constant Processing

The input time constants for 32 points of the CPU input X0 to X1F can be set by the system registers 430 to 437. If this setting is specified, an operation like the equivalent circuit below will be performed. By the setting, the noises or chattering of input will be removed.

CXn = Input signal of Xn contact
Xn = Image memory of input Xn

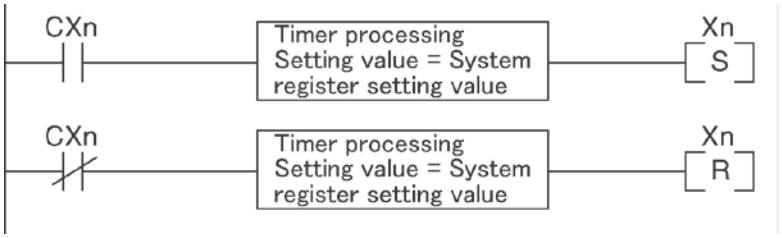

Note:

- The input signal of X contact is retrieved at the timing of the normal I/O update.
- If the partial update instruction is executed for the input in the time constant processing, the time constant processing will be invalid, and the input status at the time will be read out and set.
- The time constant processing can be performed for the input other than X0 to X1F (add-on cassettes or expansion units) by the F182 (FILTR) instruction.
- The time constant processing is invalid when the high-speed counter, pulse catch or interrupt has been specified.

Ramco National www.PanasonicSensors.com 1-800-280-6933

Chapter 13

Self-Diagnostic and Troubleshooting

13.1 Self-Diagnostic function

13.1.1 LED Display for Status Condition

Status indicator LEDs on control unit

- The control unit has a self-diagnostic function which identifies errors and stops operation if necessary.
- When an error occurs, the status of the status indicator LEDs on the control unit vary, as shown in the table above.

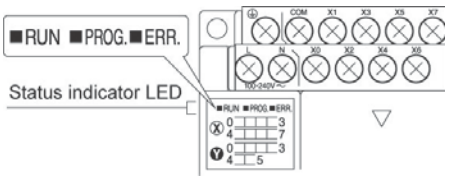

	LED status			Description	Operation status
	RUN	PROG.	ERROR/ ALARM		
Normal condition	Light (on)	Off	Off	Normal operation	Operation
	Off	Light (on)	Off	PROG. mode LED does not flash even if the forcing output is performed in program mode.	Stop
	Flashes	Flashes	Off	Forcing input/output in Run mode Flashes RUN and PROG. LED alternately.	Operation
Abnormal condition	Light (on)	Off	Flashes	When a self-diagnostic error occurs	Operation
	Off	Light (on)	Flashes	When a self-diagnostic error occurs	Stop
	Light (on) or off	Light (on) or off	Light (on)	System watchdog timer has been activated	Stop

Status indicator LEDs on expansion FP0 adapter

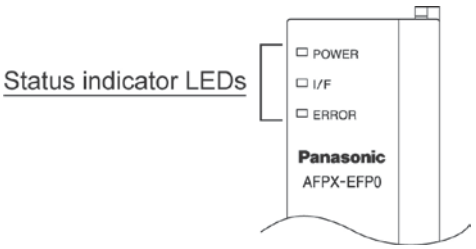

	LED status			Description
	POWER	I/F	ERROR	
Normal condition	Light (on)	Light (on)	Off	Normal operation
Abnormal condition	Light (on)	Flashes	Off	FP0 expansion unit is not connected.
	Light (on)	Light (on)	Flashes	The FP0 expansion unit, that had been connected when the power supply for the FP-X control unit turned on, came away. An error has occurred in the communication of data between the expansion FP0 adapter and FP0 expansion unit due to noise, etc.
	Light (on)	Off	Off	The expansion FP0 adapter turned on later than the FP-X control unit.

Ramco National www.PanasonicSensors.com 1-800-280-6933

13.1.2 Operation Mode When an Error Occurs

- Normally, when an error occurs, the operation stops.
- For some errors, the user may select whether operation is to be continued or stopped by setting the system registers. You can set the error which operation is to be continued or stopped using the programming tool software as shown below.

“PLC System Register” setting menu on programming tool software

To specify the steps to be taken by the FPWIN GR if a PLC error occurs, select “PLC System Register setting” under “Option” on the menu bar, and click on the “Action on Error” tab. The screen shown below is displayed.

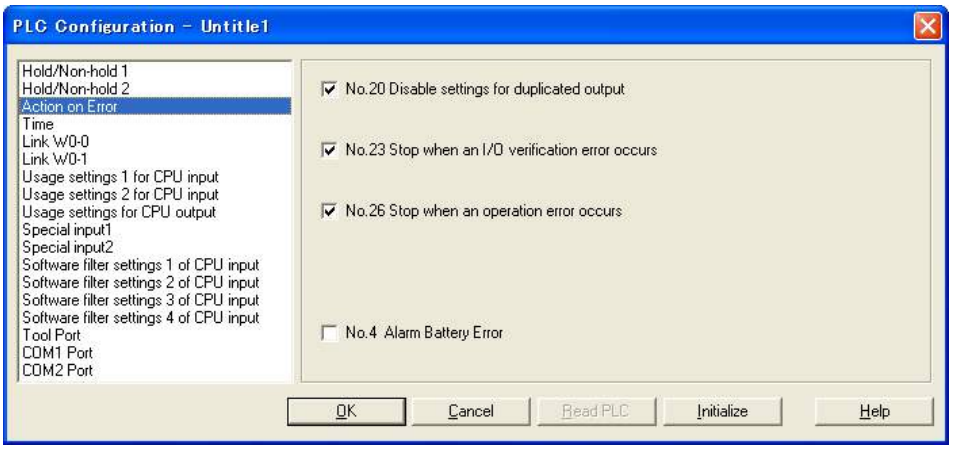

Example1: When allowing duplicated output

Turn off the check box for No. 20. When operation is resumed, it will not be handled as an error.

Example2: When continuing operation even a calculation error has occurred

Turn off the check box for No. 26. When operation is resumed, it will be continued, but will be handled as an error.

Ramco National www.PanasonicSensors.com 1-800-280-6933

13.2 Troubleshooting

13.2.1 If ERROR LED is Flashing

Condition: The self-diagnostic error occurs
Procedure 1
Check the error contents (error code) using the programming tool.

Using FPWIN GR
With the FPWIN GR, if a PLC error occurs during programming or debugging and the RUN mode is changed to the PROG. mode, the following status display dialog box is displayed automatically. Check the contents of the self-diagnosed error.

Status display dialog box

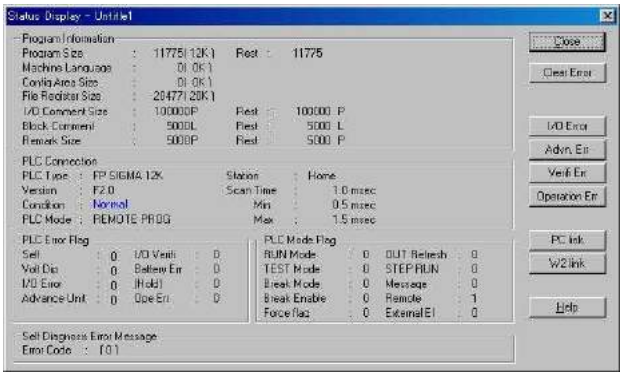

If the error is an operation error, the error address can be confirmed in this dialog box.

After correcting the error, click on the “Clear Error” button to clear the error.

Key Point:
To display the status display dialog box, select “Status Display” under “Online” on the menu bar.

Procedure 2
<For error code is 1 to 9>
- Condition
There is a syntax error in the program.
- Operation 1
Change to PROG. mode and clear the error.
- Operation 2
Execute a total-check function using FPWIN GR to determine the location of the syntax error.

<For error code is 20 or higher>
- Condition
A self-diagnostic error other than a syntax error has occurred.
- Operation
Use the programming tool in PROG. mode to clear the error.

Ramco National www.PanasonicSensors.com 1-800-280-6933

<For error code is 42 (1)>

- Condition

The expansion unit or add-on cassette that had been connected when the power supply of the control unit was turned on has come off, or the expansion unit has powered off.

- Operation 1

Turn off the power supply of the control unit, and connect the expansion unit and add-on cassette.

- Operation 2

Turn on the power supply of the expansion unit.

<For error code is 42 (2)>

- Condition

A temporary blackout such as a momentary power off occurred and the power supply of the expansion unit was turned off.

- Operation

Once the power supply of the expansion unit is restored, the control unit will be automatically reset and restarted.

Using FPWIN GR

Click on the “Clear Error” button in the “Status display dialog box”. Error code 43 and higher can be cleared.

- In the PROG. mode, the power supply can be turned off and then on again to clear the error, but all of the contents of the operation memory except hold type data are cleared.
- An error can also be cleared by executing a self-diagnostic error set instruction F148 (ERR).

Key Point:

When an operation error (error code 45) occurs, the address at which the error occurred is stored in special data registers DT90017 and DT90018. If this happens, click on the “Operation Err” button in the “Status display dialog box” and confirm the address at which the error occurred before cancelling the error.

13.2.2 If ERROR LED is ON

Condition: The system watchdog timer has been activated and the operation of PLC has been activated.

Procedure 1

Set the mode selector of PLC from RUN to PROG. mode and turn the power off and then on.

- If the ERROR LED is turned on again, there is probably an abnormality in the FP-X control unit. Please contact your dealer.
- If the ERROR LED is flashed, go to chapter 11.2.1.

Procedure 2

Set the mode selector from PROG. to RUN mode.

- If the ERROR LED is turned on, the program execution time is too long. Check the program.

Check

(1)Check if instructions such as “JMP” or “LOOP” are programmed in such a way that a scan never finish.
(2)Check if interrupt instructions are executed in succession.

Ramco National www.PanasonicSensors.com 1-800-280-6933

13.2.3 ALL LEDs are OFF

Procedure 1
Check wiring of power supply.

Procedure 2
Check if the power supplied to the FP-X control unit is in the range of the rating.
- Be sure to check the fluctuation in the voltage.

Procedure 3
Disconnect the power supply wiring to the other devices if the power supplied to the FP-X control unit is shared with them.
- If the LED on the control unit turn on at this moment, increase the capacity of the power supply or prepare another power supply for other devices.
- Please contact your dealer for further questions.

Ramco National www.PanasonicSensors.com 1-800-280-6933

13.2.4 Diagnosing Output Malfunction

Proceed from the check of the output side to the check of the input side.

Check of output condition 1: Output indicator LEDs are on
Procedure 1
Check the wiring of the loads.
Procedure 2
Check if the power is properly supplied to the loads.
- If the power is properly supplied to the load, there is probably an abnormality in the load. Check the load again.
- If the power is not supplied to the load, there is probably an abnormality in the output section. Please contact your dealer.

Check of output condition 2: Output indicator LEDS are off
Procedure 1
Monitor the output condition using a programming tool.
- If the output monitored is turned on, there is probably a duplicated output error.

Procedure 2
Forcing on the output using forcing input/output function.
- If the output indicator LED is turned on, go to input condition check.
- If the output indicator LED remains off, there is probably an abnormality in the output unit. Please contact your dealer.

Check of input condition 1: Input indicator LEDs are off
Procedure 1
Check the wiring of the input devices.
Procedure 2
Check that the power is properly supplied to the input terminals.
- If the power is properly supplied to the input terminal, there is probably an abnormality in the input unit. Please contact your dealer.
- If the power is not supplied to the input terminal, there is probably an abnormality in the input device or input power supply. Check the input device and input power supply.

Check of input condition 2: Input indicator LEDs are on
Procedure
Monitor the input condition using a programming tool.
- If the input monitored is off, there is probably an abnormality with the input unit. Please contact your dealer.
- If the input monitored is on, check the leakage current at the input devices (e.g., two-wire type sensor) and check the program again.

Check
(1)Check for the duplicated use of output. Check whether the output has been rewritten using the high-level instruction.
(2)Check the program flow when a control instruction such as MCR or JMP is used.

Ramco National www.PanasonicSensors.com 1-800-280-6933

13.2.5 A Protect Error Message Appears

When a password function is used

Procedure

Enter a password in the “Set PLC Password” menu in FPWIN GR and turn on the “Access” radio button.

Using FPWIN GR

(1)Select “Set PLC Password” under “Tool” on the menu bar.

(2)The PLC password setting dialog box shown below is displayed. Turn on the radio button next to “Access”, enter a password, and click on the “Settings” button.

Set PLC password dialog box

4-digit password

8-digit password

Note:

The password setting can be specified when the PLC is being connected online.

When using the master memory cassette

The program editing cannot be carried out with the master memory cassette. Turn off the power supply and remove the master memory.

13.2.6 PROG Mode does not Change to RUN

Condition: A syntax error or a self-diagnosed error that caused operation to stop has occurred.

Procedure 1

Check if the ERROR LED is flashing.

Example:

If the ERROR LED is flashing, check <13.2.1 If ERROR LED is flashing>.

Procedure 2

Execute a total-check function using the tool software to determine the location of the syntax error.

Using FPWIN GR

Select “Debug” on the menu bar, and select “Totally check program”. Click on the “Execute” button in the total check dialog box.

Ramco National www.PanasonicSensors.com 1-800-280-6933

13.2.7 A Communication Error has Occurred through RS485

Procedure 1
Check to make sure the transmission cables have been securely connected between the two (+) terminals and two (–) terminals of the units, and that the final unit has been correctly connected.

Procedure 2
Check if the transmission cables are within the specifications range. At this point, make sure all of the cables in the link are of the same type, and that multiple types of cables are not being used.
• Do not designate any unit other than those at both ends of the network as a terminal station.

Procedure 3
Check that link areas do not overlap.

Example:
For the specifications range of the transmission cables, <5.8.1 Selection of Transmission Cables>.

13.2.8 A Communication Error has Occurred through RS232C

Condition: No communication with 1-channel type RS232C cassette (AFPX-COM1)
2-channel type RS232C cassette (AFPX-COM2)
1-channel RS485 + 1-channel RS232C cassette (AFPX-COM4)
Ethernet + 1-channel RS232C cassette (AFPX-COM5)
2-channel type RS485 cassette (AFPX-COM6)

Procedure 1
Check if the receive data terminal of a connected device is connected to the SD and the send data terminal is connected to the RD. Check if the SG is connected.

Procedure 2
1. Check if the CS signal is on.
2. When the “CS” of the communication cassette LED does not light, the CS signal is not on.
3. If the three-wire type is used, connect the RS signal and the CS signal of the communication cassette, and turn the CS signal on.

Note) For COM1 only.

Procedure 3
Check that link areas do not overlap.

Procedure 4
When the RS232C is either one of the followings, check if “COM. cassette” is selected for “Port selection”.
1. When controlling the 1-channel type RS232C with 5-wire type.
2. When using the COM2 port with the 2-channel type RS232C
3. When using the COM2 port with the 1-channel RS485 and 1-channel RS232C.
4. When using the COM2 port with the Ethernet and 1-channel RS232C.

Procedure 5
Check that the baud rate is set to 9600 bps, 19200 bps or 115200 bps for the COM2 port of the 2-channel type RS485. The settings of the system register and the cassette backside switch should be the same.

Example: <Chapter 7 Communication Cassette>

Ramco National www.PanasonicSensors.com 1-800-280-6933

13.2.9 A Communication Error has Occurred through RS422

Condition: No communication with 1-channel type RS232C/RS422 cassette (AFPX-COM3)

Procedure 1
Check to make sure the transmission cables have been securely connected between the two (+) terminals and two (–) terminals of the units, and that the final unit has been correctly connected.

Procedure 2
Check if the transmission cables are within the specifications range. At this point, make sure all of the cables in the link are of the same type, and that multiple types of cables are not being used.
- Do not designate any unit other than those at both ends of the network as a terminal station.

Procedure 3
Check that link areas do not overlap.

Example:
For the specifications range of the transmission cables, <5.8.1 Selection of Transmission Cables>.

13.2.10 Expansion Unit does not Operate

Procedure 1
Check if the terminal setting is specified for the expansion unit.
Check if the terminal setting is specified for multiple expansion units.

Procedure 2
Check if the expansion FP0 adapter is installed at the last position.
When the expansion FP0 adapter is installed at the last position, the terminal setting for other expansion unit is not necessary.

Procedure 3
Check if the power supply has turned on and off in a short time such as momentary power failure.
There is a possibility that the expansion unit has not been recognized due to the occurrence of momentary power failure.
Turn off and on the power supply again.

Ramco National www.PanasonicSensors.com 1-800-280-6933

13.2.11 A Communication Error has Occurred through Ethernet

Condition: No communication with Ethernet port of Ethernet + 1-channel type RS232C (AFPX-COM5)

Procedure 1

Check if the LAN cable is securely connected to each unit or a PC.
When using a HUB for the connection, check if the power supply of the HUB is on.

Procedure 2

Check if the LINK/ACT LED lights up.
- When the LED is off, the LAN cable is not connected correctly.

Procedure 3

Check the IP addresses and the destination.

Procedure 4

Check if the communication format and baud rate for the COM1 port of the FP-X matches the configuration setting of the AFPX-COM5.

Condition: The ERR LED of Ethernet + 1-channel type RS232C is flashing.

Procedure 1

Check the status with the Configurator WD.
- If the “IP duplicate error” is indicated for the status, the IP address may be duplicate on the network. Specify an IP address that is not duplicate.
- If the “DHCP error” is indicated for the status, getting IP from the DHCP server has been failed. Check if there is no problem on the network system.

Ramco National www.PanasonicSensors.com 1-800-280-6933

Chapter 14

Precautions During Programming

14.1 Use of Duplicated Output

14.1.1 Duplicated Output

What is duplicated output?

- Duplicated output refers to repeatedly specifying the same output in a sequence program.
- If the same output is specified for the “OT” and “KP” instructions, it is considered to be duplicated output.
  (Even if the same output is used for multiple instructions, such as the SET, RST instruction or high-level instruction (such as data transfer), it is not regarded as duplicated output.)
- If you enter RUN mode while the duplicated output condition exists, it will be normally flagged as an error. (The ERROR/ALARM LED will flash and the self-diagnostic error flag R9000 will go on.)

How to check for duplicated use

You can check for duplicated outputs in the program using the programming tool, by the following method.

- Using the tool software

Select the “Debug” → “Totally Check Program” in the menu bar, and click “Execute”. If there are any duplicated outputs, an error message and the address will be displayed.

Enabling duplicated output

- If you need to use output repeatedly due to the content of the program, duplicated output can be enabled.
- In this case, change the setting of system register 20 to “enable”.
- When this is done, an error will not occur when the program is executed.

14.1.2 When Output is Repeated with an OT, KP, SET or RST Instruction

Condition of internal and output relays during operation

- When instructions are repeatedly used which output to internal and output relays such as transfer instructions and OT, KP, SET and RST instructions, the contents are rewritten at each step during operation.

<Example>

Processing when SET, RST and OT instructions are used (X0 to X2 are all on).

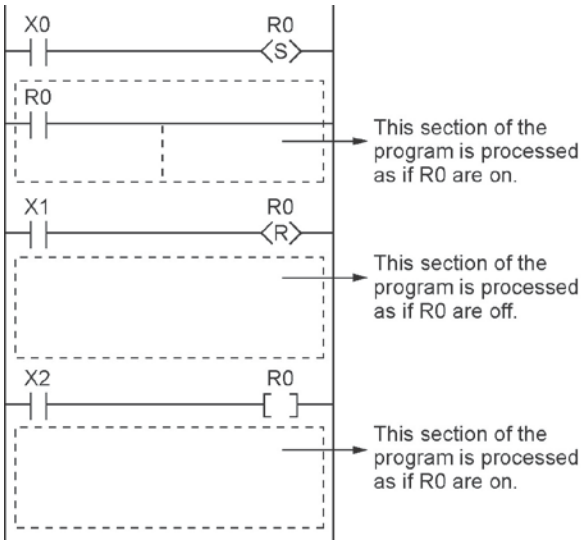

Ramco National www.PanasonicSensors.com 1-800-280-6933

The output is determined by the final operation results

- If the same output is used by several instructions such as the OT, KP, SET, RST or data transfer functions, the output obtained at the I/O update is determined by the final results of the operation.

<Example>

Output to the same output relay Y0 with OT, KP, SET and RST instructions.

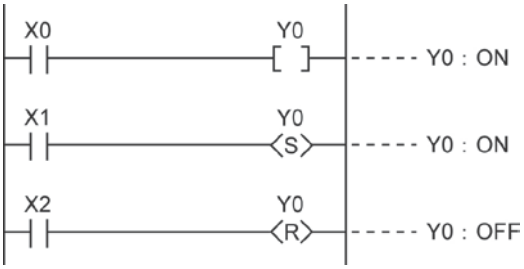

When X0 to X2 are all on, Y0 is output as off at I/O update.

- If you need to output a result while processing is still in progress, use a partial I/O update instruction (F143).

Ramco National www.PanasonicSensors.com 1-800-280-6933

14.2 Handling BCD Data

14.2.1 BCD Data

BCD is an acronym for binary-coded decimal, and means that each digit of a decimal number is expressed as a binary number.

<Example> Expressing a decimal number in BCD:

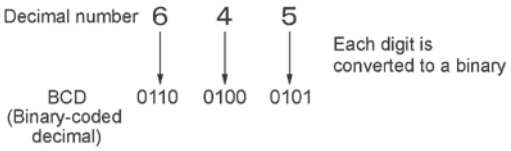

14.2.2 Handling BCD Data in the PLC

- When inputting data from a digital switch to the PLC or outputting data to a 7-segment display (with a decoder), the data must be in BCD form. In this case, use a data conversion instruction as shown in the examples at below.
- BCD arithmetic instructions (F40 to F58) also exist which allow direct operation on BCD data, however, it is normally most convenient to use BIN operation instructions (F20 to F38) as operation in the PLC takes place in binary.

Input from a digital switch

Use the BCD-to-BIN conversion instruction F81.

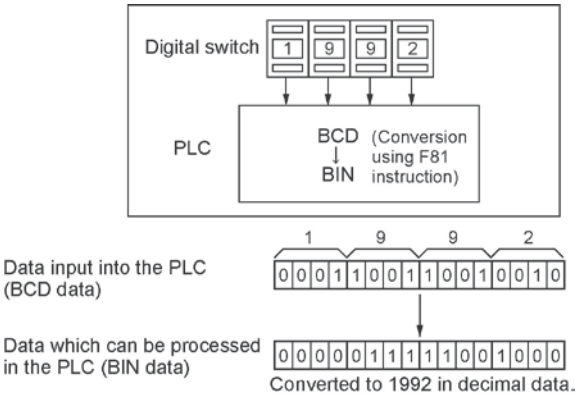

Output to a 7-segment display (with decoder)

Use the BIN-to-BCD conversion instruction F80.

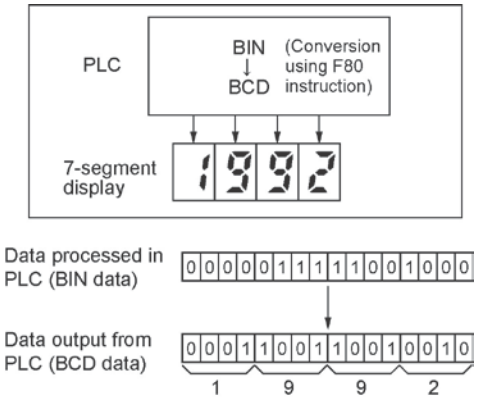

Ramco National www.PanasonicSensors.com 1-800-280-6933

14.3 Handling Index Registers

14.3.1 Index Registers

- Like other registers, index registers have 14 points, I0 to ID, for reading and writing 16-bit data.
- Use an index register to indirectly specify a memory area number. (This is also called index modification.)

<Example>
Transferring the contents of data register DT100 to the number specified by the contents of an index register.

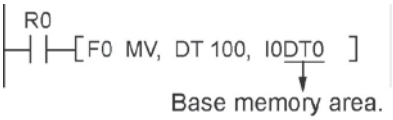

In this example, the number of the destination data register varies depending on the contents of I0 with DT0 acting as a base. For example, when I0 contains K10, the destination will be DT10, and when I0 is K20, the destination will be DT20.

- In this way, index registers allow the specification of multiple memory areas with a single instruction, and thus index registers are very convenient when handling large amounts of data.

14.3.2 Memory Areas Which can be Modified with Index Registers

- Index registers can be used to modify other types of memory areas in addition to data registers DT.
  <Example> I0WX0, I0WY1, I0WR0, I0SV0, I0EV2, I0DT100
- Constants can also be modified.
  <Example> I0K10, I0H1001
- An index register cannot modify another index register.
  <Example> I0I0, I0I1
- When using index modification with an instruction which handles 32-bit data, specify with I0. In this case, I0 and I1 are handled together as 32-bit data.

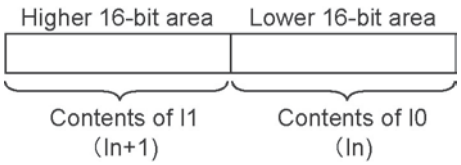

Ramco National www.PanasonicSensors.com 1-800-280-6933

14.3.3 Example of Using an Index Register

Repeatedly reading in external data

<Example>

Writing the contents of input WX3 to a sequence of data registers beginning from DT0.

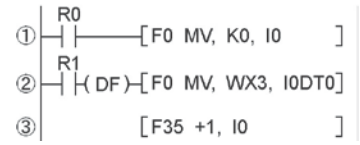

① When R0 turns on, 0 is written to index register I0.

② When the R1 turns on, the contents of input WX3 is transferred to the data register specified by I0DT0.

③ Add 1 to I0. In this case, the contents of I0 will change successively, and the destination data register will be as follows.

Input times of R1	Contents of I0	Destination data register
1st	0	DT0
2nd	1	DT1
3rd	2	DT2
:	:	:

Inputting and outputting data based on a number specified by an input

<Example 1> Setting a timer number specified by a digital switch

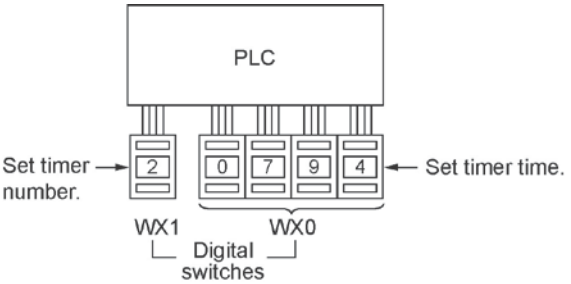

① Convert the BCD timer number data in WX1 to binary and set it in index register I0.

② Convert the BCD timer set value in WX0 to binary and store in the timer set value area SV specified by contents of I0.

<Example 2>

Taking external output of the elapsed value in a timer number specified by a digital switch

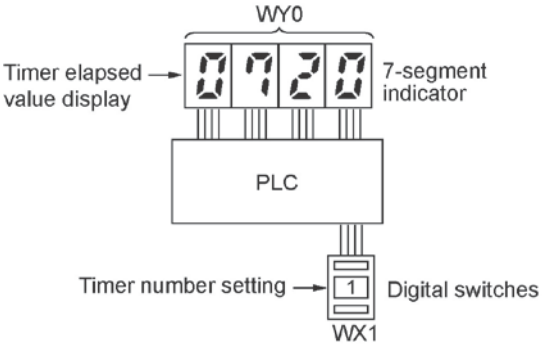

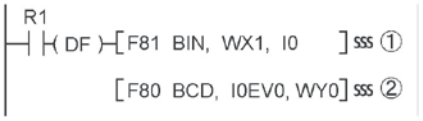

① Convert the BCD timer number data in WX1 to binary and set it in index register I0.

② Convert the elapsed value data EV in the timer specified by I0 to BCD, and output it to output relay WY0.

Ramco National www.PanasonicSensors.com 1-800-280-6933

14.4 Operation Errors

14.4.1 Outline of Operation Errors

- An operation error is a condition in which operation is impossible when a high-level instruction is executed.
- When an operation error occurs, the ERROR/ALARM LED on the control unit will blink and the operation error flags (R9007 and R9008) will turn on.
- The operation error code “E45” is set at special data register DT90000.
- The error address is stored in special data registers DT90017 and DT90018.

Types of operation error

1. Address error

The memory address (number) specified by index modification is outside the area which can be used.

2. BCD data error

Operation is attempted on non-BCD data when an instruction handling BCD is executed, or BCD conversion is attempted on data which is not within the possible conversion range.

3. Parameter error

In an instruction requiring the specification of control data, the specified data is outside the possible range.

4. Over area error

The data manipulated by a block instruction exceeds the memory range.

14.4.2 Operation Mode When an Operation Error Occurs

- Normally, the operation stops when an operation error occurs.
- When you set system register 26 to “continuation”, the control unit operates even if an operation error occurs.

Using programming tool software

1. Set the mode of the CPU to PROG.
2. Select the “Option” in “PLC Configuration” option from the menu bar.
3. On the “PLC Configuration” menu, select “Action on error”. This displays system registers 20 to 26.
4. Remove the check of system register 26.
5. Press the “OK” to write the setting to the PLC.

14.4.3 Dealing with Operation Errors

<Procedure>

1. Check the location of the error.

Check the address where the error occurred, which is stored in DT90017 and DT90018, and make sure the high-level instruction for that address is correct and appropriate.

2. Clear the error.

Use a programming tool to clear the error.

- Select “Online” → “Status Display” in the menu bar. Execute “Clear Error”.

- An error can be cleared by turning the power off and on in PROG. mode, however, the contents of the operation memory except the hold type data will be cleared.
- An error can also be cleared by executing a self-diagnostic error set instruction (F148).
- If the mode selector is set to “RUN”, RUN will resume as soon as the error is cleared. So if the cause of the error is not removed, the error may seem not to be cleared.

Ramco National www.PanasonicSensors.com 1-800-280-6933

14.4.4 Points to Check in Program

1. Check if an extraordinarily large value or negative value was stored in the index register.
<Example> When a data register is modified using an index register

In this case, index register modifies the address of data register DT0. If data in I0 is too large, it will exceed the addressable range of the data register. The last address of the data register is DT32764, so if the contents of I0 exceeds 32764, an operation error will occur. The same is true when the contents of I0 are a negative value.

2. Is there any data which cannot be converted using BCD ↔ BIN data conversion?
<Example> When BCD-to-BIN conversion is attempted

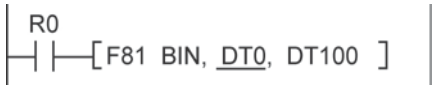

In this case, if DT0 contains a hexadecimal number with one of the digits A through F such as 12A4, conversion will be impossible and an operation error will result.

<Example> When BIN-to-BCD conversion is attempted

In this case, if DT1 contains a negative value or a value greater than K9999, an operation error will occur.

3. Check if the divisor of a division instruction is “0”.
<Example>

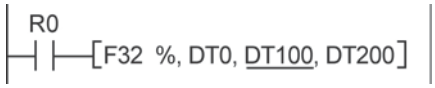

In this case, if the content of DT100 is “0”, an operation error will occur.

Ramco National www.PanasonicSensors.com 1-800-280-6933

14.5 Instruction of Leading Edge Detection Method

14.5.1 Instructions of Leading Edge Detection Method

Instructions using the leading edge detection operation

1. DF (leading edge differential) instructions
2. Count input for CT (counter) instructions
3. Count input for F118 (UDC up-down counter) instructions
4. Shift input for SR (shift register) instructions
5. Shift input for F119 (LRSR left-right shift register) instructions
6. NSTP (next step) instructions
7. Differential execution type high-level instruction (P13)

Leading edge detection method

- An instruction with a leading edge detection method operates only in the scan where its trigger (execution condition) is detected switching from off to on.

(1) Standard operation

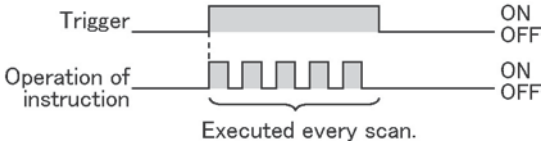

(2) Leading edge detection operation

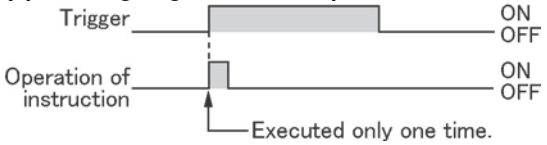

How to perform leading edge detection

The condition of the previous execution and the condition of the current execution are compared, and the instruction is executed only if the previous condition was off and the current condition is on. In any other case, the instruction is not executed.

Precautions when using an instruction which performs leading edge detection

- When RUN begins, for example when the system is powered on, the off → on change of the execution condition (trigger) is not detected. The instruction is not executed. Execution of the instruction will take place as explained on the next page.
- When used with one of the instructions indicated in instructions 1 to 6 below which change the order of execution of instructions, the operation of the instruction may change depending on input timing. Take care regarding this point.

Be careful when using leading edge detection type instructions with control instructions, such as:

1. MC and MCE instructions
2. JP and LBL instructions
3. LOOP and LBL instructions
4. CNDE instruction
5. Step ladder instructions
6. Subroutine instructions

Ramco National www.PanasonicSensors.com 1-800-280-6933

14.5.2 Operation and Precautions When RUN Starts

Operation of first scan after RUN begins

- The leading edge detection instruction is not executed when the mode has been switched to the RUN mode, or when the power supply is booted in the RUN mode, if the trigger (execution condition) is already on.

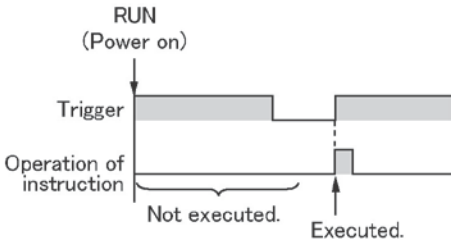

- If you need to execute an instruction when the trigger (execution condition) is on prior to switching to RUN mode, make a program as below using R9014 (initial pulse off relay). (R9014 is a special internal relay which is off during the first scan and turns on at the second scan.)

<Example 1> DF (leading edge differential) instruction

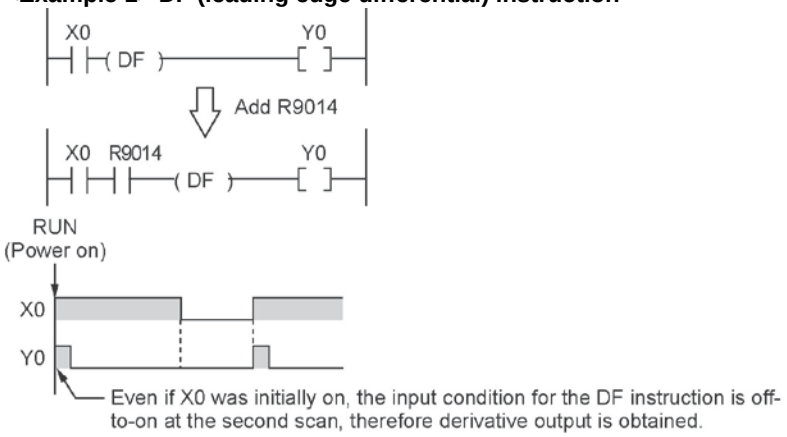

<Example 2> CT (counter) instruction

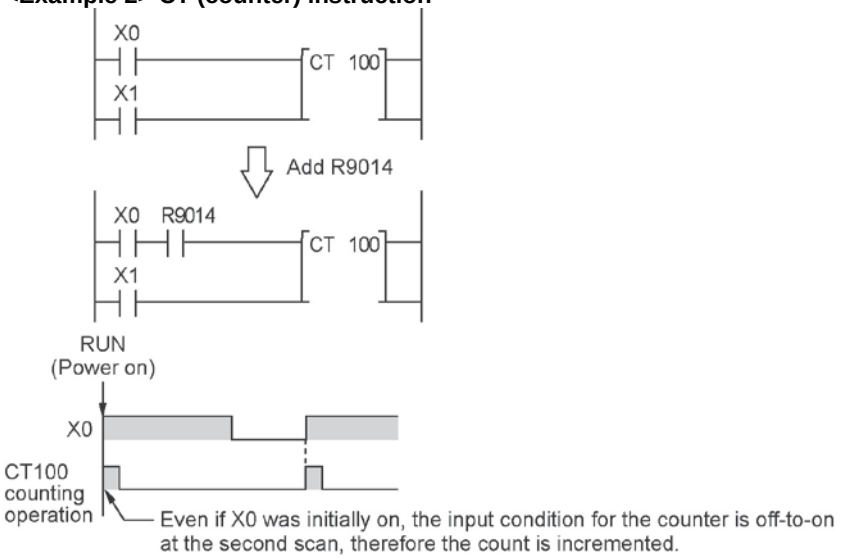

Ramco National www.PanasonicSensors.com 1-800-280-6933

14.5.3 Precautions When Using a Control Instruction

- If a leading edge detection instruction is in a control instruction, it will be executed only under the following condition: The leading edge detection instruction was off when the execution condition of the previous control instruction was reset, and the leading edge detection instruction is on when the execution condition of the current control instruction becomes on.
- When a leading edge detection instruction is used with an instruction which changes the order of instruction execution such as MC, MCE, JP or LBL, the operation of the instruction may change as follows depending on input timing. Take care regarding this point.

<Example 1> Using the DF instruction between MC and MCE instructions

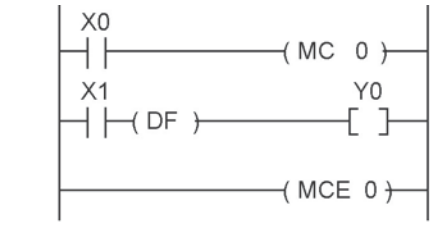

[Time chart 1]

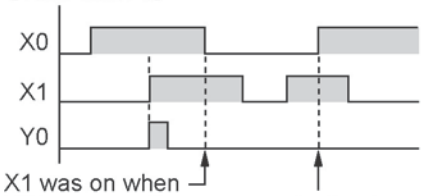

X1 was on when X0 became off.

The input condition (X1) for the DF instruction has not changed since the time of the previous execution, thus derivative output is not obtained.

[Time chart 2]

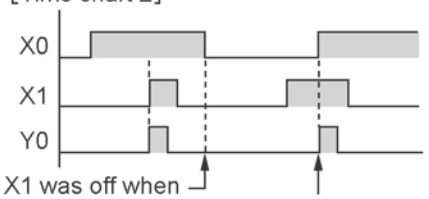

X1 was off when X0 became off.

The input condition (X1) for the DF instruction has changed from off to on since the time of the previous execution, thus derivative output is obtained.

Ramco National www.PanasonicSensors.com 1-800-280-6933

<Example 2> Using the CT instruction between JP and LBL instructions

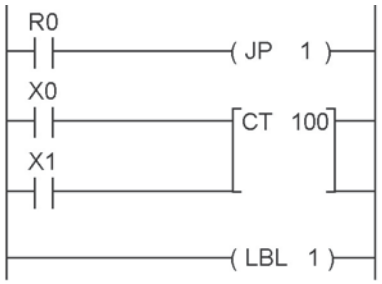

[Time chart 1]

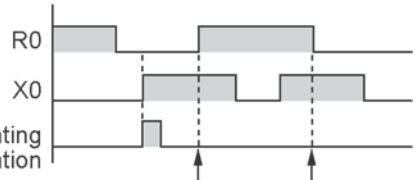

Final timing at which the previous JP instruction was not executed.

The count is not incremented, because the final timing at which the previous JP instruction was not executed has not been change, and the execution condition X0 for the counter input has not changed.

[Time chart 2]

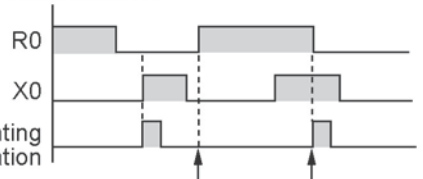

Final timing at which the previous JP instruction was not executed.

The count is not incremented, because the count input changed from off to on after the final timing at which the previous JP instruction was not executed.

Ramco National www.PanasonicSensors.com 1-800-280-6933

14.6 Precautions for Programming

Programs which are not executed correctly

Do not write the following programs as they will not be executed correctly.

<Example 1>

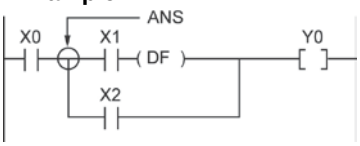

• When X1 was on prior to X0, Y0 will not be on even if X0 becomes on.

<Example 2>

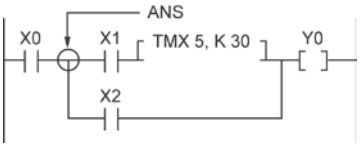

• TMX will activate if X1 becomes on whether X0 is on or off.

<Example 3>

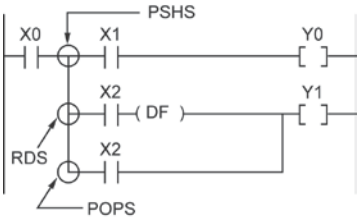

• When X2 was on prior to X0, Y1 will not be on even if X0 becomes on.

When a combination of contacts are set as the trigger (execution condition) of a differential instruction (DF) or timer instruction, do not use an AND stack (ANS) instruction, read stack (RDS) instruction, or pop stack (POPS) instruction.

Examples in which the above programs are rewritten

<Program in which the example 1 is rewritten>

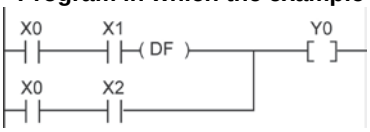

<Program in which the example 2 is rewritten>

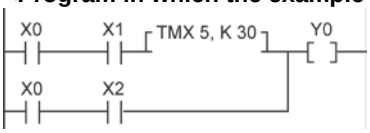

<Program in which the example 3 is rewritten>

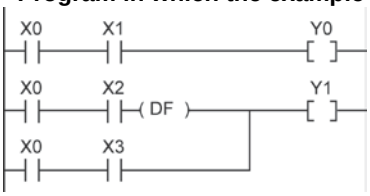

Ramco National www.PanasonicSensors.com 1-800-280-6933

14.7 Rewrite Function During RUN

14.7.1 Operation of Rewrite During RUN

How operation of rewrite during RUN

Rewriting programs can be executed even in RUN mode. When a rewrite is attempted during RUN, the tool service time is temporarily extended, program rewriting is performed, and operation is resumed without the need to change the mode. For this reason, the time of the scan during the RUN rewrite extends from several ms to several hundreds of ms.

Operation during rewrite

1. External output (Y) is held.
2. External input (X) is ignored.
3. The timer (T) stops the clock.
4. Rise and fall changes in the inputs of differential instructions (DF), counter instructions (CT), and left/right shift registers are ignored.
5. Interrupt functions are stopped.
6. Internal clock relays (special internal relays) are also stopped.
7. Pulse output is stopped during the rewrite.

Set values for timer/counter instructions

All set values specified with decimal constants (K) in timer and counter instructions are preset in the corresponding set value areas (SV). Values in the elapsed value area (EV) do not change.

Operation of rewrite during RUN completed flag

The rewrite during RUN completed flag (R9034) is a special internal relay that goes on for only the first scan following the completion of rewriting in the RUN mode. It can be used instead of the initial pulse relay following a change in the program.

Ramco National www.PanasonicSensors.com 1-800-280-6933

14.7.2 Cases Where Rewriting During Run is not Possible

When the timeout error message is indicated:
Even if the timeout error message is indicated, it is highly possible that the program in PLC has been already rewritten. Carry out the following operations.

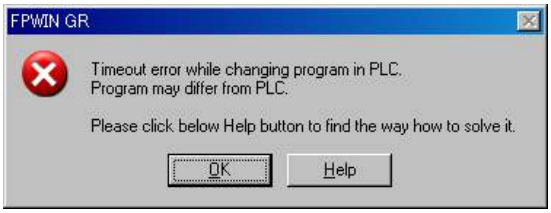

1. When ladder symbol mode
As a ladder editing is left, set it to the offline edit mode. Complete the program conversion in the tool software, and then change to the online edit mode to check.
2. When boolean mode
A ladder editing is cleared.
Set it to the offline edit mode and carry out the editing operation again. After the operation, change to the online edit mode to check.

When the timeout error occurs using the through mode in GT series programmable display.
Extend the timeout time of the programmable display using the GTWIN.
(The default setting is 5 seconds.)

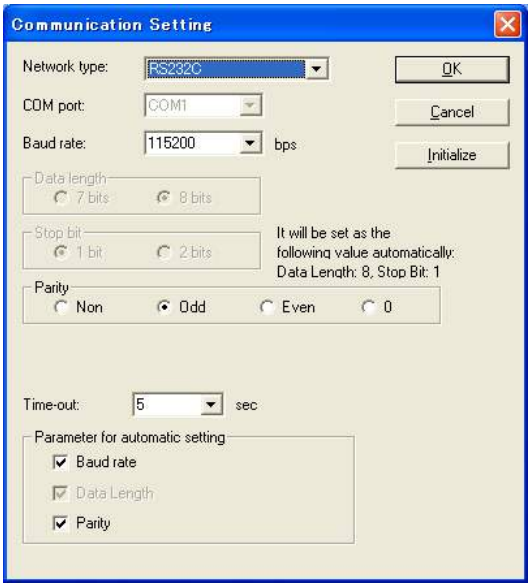

Select “Transfer” from “File” in the menu bar. The “transfer data” screen will open. Select “Condition” to open “Communication Setting” screen.
Change the value for “Timeout”.
Click “OK” button to complete the change of setting.

Ramco National www.PanasonicSensors.com 1-800-280-6933

Cases where rewriting is not possible during RUN
1. When the result of rewriting is a syntax error.

<Example>
When executing the rewriting which does not form the following pair of instructions.
1. Step ladder instructions (SSTP/STPE)
2. Subroutine instructions (SUB/RET)
3. Interrupt instructions (INT/IRET)
4. JP/LBL
5. LOOP/LBL
6. MC/MCE

Also, rewriting is not possible during RUN in case of other syntax errors.

2. During the forced input/output operation

Interrupt restrictions
When using interrupt, high-speed counter, pulse output or PWM output functions, do not perform a rewrite during RUN.
If a rewrite during RUN is executed, the operation as below will be performed. Exercise caution.

1. Interrupt programs will be disabled. Enable by executing an ICTL instruction once again.
<Example> Using R9034 (rewrite during RUN completed flag)

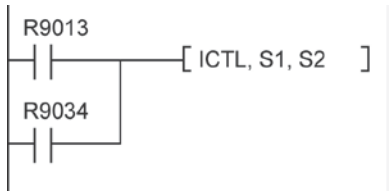

2. The high-speed counter will continue to count.
Target value match on/off instructions (F166/F167) will continue.
Coincidence interrupt programs will be disabled when the F166/F167 instruction is running.

3.The pulse output/PWM output stops when the rewriting is performed. The operation after the completion of the rewriting during RUN varies depending on each instruction.

Instruction number	Name	Operation after the completion of rewriting during RUN
F171 (SPDH)	Pulse output (Trapezoidal control)	The operation before rewriting continues.
F171(SPDH)	Pulse output (Home position return)	The operation before rewriting continues.
F172 (PLSH)	Pulse output (JOG operation)	Stop
F173 (PWMH)	PWM output	Stop
F174 (SP0H)	Pulse output (Selectable data table control operation)	The operation before rewriting continues.
F175 (SPSH)	Pulse output (Linear interpolation)	The operation before rewriting continues.

4. The fixed time sampling trace will not be stopped.

Ramco National www.PanasonicSensors.com 1-800-280-6933

14.7.3 Procedures and Operation of Rewrite During RUN

Item		FPWIN GR Ladder symbol mode	FPWIN GR Boolean mode
Rewrite procedure		Maximum of 128 steps. Changes are performed by block. When PG conversion is executed online, the program will be rewritten. 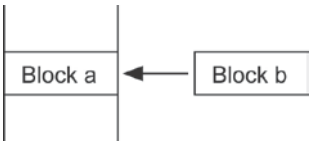	Rewriting performed by step. Caution is required as rewriting takes place simultaneously with the change.
Operation of each instruction	**OT/KP**	If an instruction written in block a is deleted in block b, the condition before the rewrite will be held.	If an instruction written in block a is deleted in block b, the condition before the rewrite will be held. Y contact relays which are on bill be held in the on status. To turn them off in the RUN mode, use forced output.
	TM/CT	• If an instruction written in block a is deleted in block b, the condition before the rewrite will be held. • Set values specified by K constants in TM/CT instructions are preset in all of the corresponding SV's in the program. (Elapsed values EV do not change.)	• If an instruction written in block a is deleted in block b, the condition before the rewrite will be held. • Set values specified by K constants in TM/CT instructions are preset in all of the corresponding SV's in the program. (Elapsed values EV do not change.)
	Fun High-level instructions	If an instruction written in block a is deleted in block b, the condition before the rewrite will be held.	• If deleted, the output memory area will be held.
	MC/MCE	When writing MC/MCE instructions, be sure to write the instructions as a pair.	Writing or deleting a single instruction during RUN is not possible. Write or delete the instruction in FPWIN GR ladder symbol mode.
	CALL/SUB/ RET	A subroutine is a program appearing between SUBn and RET instructions. Be sure to write it to an address which follows the ED instruction.	Write in the order: RET, SUB, CALL Delete in the order: CALL, SUB, RET
	INT/IRET	An interrupt program is an program appearing between INTn and IRET instructions. Be sure to write it to an address which follows the ED instruction.	Write in the order: IRET, INT Delete in the order: INT, IRET

Ramco National www.PanasonicSensors.com 1-800-280-6933

Item		FPWIN GR Ladder symbol mode	FPWIN GR Boolean mode
Operation of each instruction	**SSTP/STPE**	A distance with the same number cannot be defined twice. An SSTP instruction cannot be written in a subprogram.	Writing and deletion of a single instruction is not possible for a program with no step ladder area. Write or delete both instructions simultaneously in FPWIN GR ladder symbol mode. In the case of an SSTP instruction only, writing and deletion of a single instruction is possible for a program with a step ladder area.
	JP/LOOP/ LBL	Be sure to write the instruction for setting the loop number before LBL-LOOP instructions.	Write in the order: JP-LBL or LOOP-LBL Delete in the order: LBL-JP or LBL-LOOP

Ramco National www.PanasonicSensors.com 1-800-280-6933

14.8 Processing During Forced Input and Output

14.8.1 Processing when forced input/output is initiated during RUN

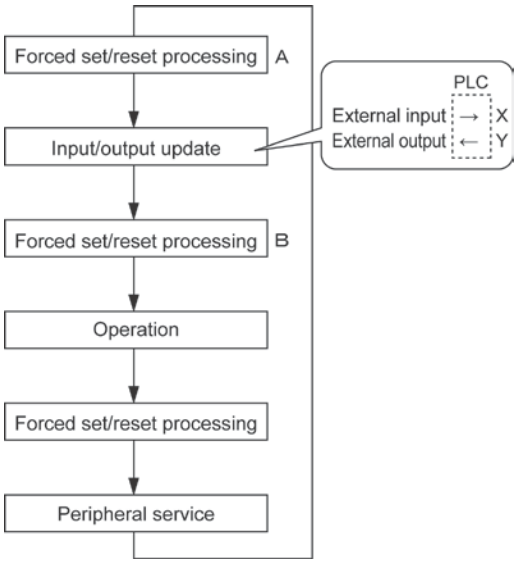

1. Processing of external input (X)

- Regardless of the state of the input from the input device, forced on/off operation will take precedence at a contact specified for forced input/output in the above procedure B. At this time, the input LED will not blink, however, the area of input X in the operation memory will be rewritten.
- Contacts not specified will read in the on/off state according to the condition of the input from the input device.

2. Processing of external output (Y)

- Regardless of the result of operation, forced on/off will take precedence at a contact specified for forced input/output in the above procedure A. At this time, the area of output Y in the operation memory will be forcedly rewritten. External output will take place according to the input/output update timing in the above diagram.
- The on/off state of contacts not specified will be determined by the operation result.

3. Processing of Timer (T) and Counter (C)

- Regardless of the timer/counter input condition, forced on/off operation will take precedence at a contact specified for forced input/output. At this time, the contact of the timer (T) or counter (C) in the operation memory will be rewritten. Timing and counting will not take place during control.
- The on/off state of contacts not specified will be determined by the operation result.

Operation during operation

For small-sized PLCs FP0, FP1, FPΣ and FP-X

The internal relay R or output Y specified by OT or KP instruction is rewritten according to the results of operation. However, as the R or Y is set/reset again right before the peripheral service (as the above procedure C), the monitoring value with the tooling software or the output to external devices is forcibly rewritten to a specified value.

For medium-sized PLCs FP2 and FP2SH

For the internal relay R and output Y specified by OT or KP instruction, the value of the forced processing has a priority. When rewritten by a high-level instruction, the result of the instruction has a priority.

Ramco National www.PanasonicSensors.com 1-800-280-6933

Chapter 15

Specifications

15.1 Table of Specifications

15.1.1 General Specifications

<table>
<tr><th colspan="2">Item</th><th colspan="3">Description</th></tr>
<tr><td colspan="2">Ambient temperature</td><td colspan="3">0 to +55 °C</td></tr>
<tr><td colspan="2">Storage temperature</td><td colspan="3">–40 to +70°C</td></tr>
<tr><td colspan="2">Ambient humidity</td><td colspan="3">10 to 95%RH (at25°C non-condensing)</td></tr>
<tr><td colspan="2">Storage humidity</td><td colspan="3">10 to 95%RH (at25°C non-condensing)</td></tr>
<tr><td rowspan="11">Break-down voltage Note1)</td><td rowspan="8">Relay type</td><td></td><td>AC power supply</td><td>DC power supply</td></tr>
<tr><td>Between input terminal and output terminal Note4)</td><td rowspan="4">2300 V AC for 1 min. Note2)</td><td>2300 V AC for 1 min. Note2)</td></tr>
<tr><td>Between input terminals and power supply/earth terminals</td><td>500 V AC for 1 min. Note2)</td></tr>
<tr><td>Between output terminals and power supply/earth terminals</td><td>2300 V AC for 1 min. Note2)</td></tr>
<tr><td>Between cassette I/O terminal and power supply/earth terminals Note3)</td><td rowspan="2">500 V AC for 1 min. Note2)</td></tr>
<tr><td>Between cassette I/O terminal and input terminals</td><td>500 V AC for 1 min. Note2)</td></tr>
<tr><td>Between cassette I/O terminal and output terminals</td><td>2300 V AC for 1 min. Note2)</td><td>2300 V AC for 1 min. Note2)</td></tr>
<tr><td>Between communication cassette RS485 and power supply/input/ output/earth terminals Note3)</td><td>500 V AC for 1 min. Note2)</td><td rowspan="2">500 V AC for 1 min. Note2)</td></tr>
<tr><td>Between power supply terminal and earth terminal</td><td>1500 V AC for 1 min. Note2)</td></tr>
<tr><td rowspan="9">Transistor type</td><td>Between input terminal and output terminal Note4)</td><td>500 V AC for 1 min.</td><td rowspan="9">500 V AC for 1 min.</td></tr>
<tr><td>Between input terminals and power supply/earth terminals</td><td rowspan="3">2300 V AC for 1 min. Note2)</td></tr>
<tr><td>Between output terminals and power supply/earth terminals</td></tr>
<tr><td>Between cassette I/O terminal and power supply/earth terminals Note3)</td></tr>
<tr><td>Between cassette I/O terminal and input/output terminals</td><td rowspan="2">500 V AC for 1 min.</td></tr>
<tr><td>Between communication cassette RS485 and power supply/input/ output/earth terminals Note3)</td></tr>
<tr><td>Between power supply terminal and earth terminal</td><td>1500 V AC for 1 min. Note2)</td></tr>
<tr><td colspan="2" rowspan="8">Insulation resistance Note1)</td><td>Between input terminal and output terminal Note4)</td><td colspan="2" rowspan="8">100 MΩ or more
(500 V DC
measured with a megohm-meter)</td></tr>
<tr><td>Between input terminals and power supply/earth terminals</td></tr>
<tr><td>Between output terminals and power supply/earth terminals</td></tr>
<tr><td>Between cassette I/O terminal and power supply/earth terminals Note3)</td></tr>
<tr><td>Between cassette I/O terminal and input/output terminals</td></tr>
<tr><td>Between communication cassette RS485 and power supply/input/ output/earth terminals Note3)</td></tr>
<tr><td>Between power supply terminal and earth terminal</td></tr>
</table>

Ramco National www.PanasonicSensors.com 1-800-280-6933

Item		Description
Vibration resistance		5 to 9 Hz, single amplitude of 3.5 mm, 1 cycle/min 9 to 150 Hz, constant acceleration of 9.8 m/s^2, 1 cycle/min, 10 min on 3 axes
Shock resistance		Shock of 147 m/s^2, 4 times on 3 axes
Noise immunity	AC	1500 Vp-p with pulse widths 50 ns and 1µs (based on in-house measurements) (AC power supply terminal)
	DC	1000 Vp-p with pulse widths 50 ns and 1µs (based on in-house measurements) (DC power supply terminal)
Operation condition		Free from corrosive gases and excessive dust
Conformed EC directive		EMC: EN61131-2, LVD: EN61131-2
Overvoltage category		Category II
Pollution level		Pollution level 2

Note1) Not isolated between the tool port, USB port, Analog input cassette and Communication cassette (RS232C part).

Note2) Cutoff current: 5 mA (Factory default setting)

Note3) Excluding between the Analog input cassette, Communication cassette (RS232C part) and protection earth terminal.

Note4) Excluding between the input terminal and the output terminal of the pulse I/O cassette.

Power supply specifications

AC Power Supply

Item	Specifications		
	C14	C30/C60	E30
Rated voltage	100 to 240 V AC		
Voltage regulation range	85 to 264 V AC		
Inrush current (at 240 V AC, 25 °C)	40 A or less	45 A or less	40 A or less
Momentary power off time	10 ms (when using 100 V AC)		
Frequency	50/60 Hz (47 to 63 Hz)		
Leakage current	0.75 mA or less between input and protective earth terminals		
Internal power supply part Guaranteed life	20,000 hours (at 55 °C)		
Fuse	Built-in (Cannot be replaced)		
Insulation system	Transformer insulation		
Terminal screw	M3		

Service Power Supply for Input (Output) (Used for AC power supply type only)

Item	Specifications	
	C14	C30/C60/E30
Rated output voltage	24 V DC	
Voltage regulation range	21.6 to 26.4 V DC	
Rated output current	0.15 A	0.4 A
Overcurrent protection function Note)	Available	
Terminal screw	M3	

Note) This is a function to protect overcurrent temporarily. If a current load that is out of the specifications is connected, it may lead to damages.

Ramco National www.PanasonicSensors.com 1-800-280-6933

DC power supply

Item	Specifications	
	C14	C30/C60
Rated voltage	24 V DC	
Voltage regulation range	20.4 to 28.8 V DC	
Inrush current	12 A or less (at 25 °C)	
Momentary power off time	10 ms	
Internal power supply part Guaranteed life	20,000 h (at 55 °C)	
Fuse	Built-in (Cannot be replaced)	
Insulation system	Transformer insulation	
Terminal screw	M3	

Weight

Unit	Model No.	Weight
Control unit	AFPX-C14R	Approx. 280 g
	AFPX-C14RD	Approx. 260 g
	AFPX-C14T	Approx. 270 g
	AFPX-C14TD	Approx. 250 g
	AFPX-C14P	Approx. 270 g
	AFPX-C14PD	Approx. 250 g
	AFPX-C30R	Approx. 490 g
	AFPX-C30RD	Approx. 470 g
	AFPX-C30T	Approx. 460 g
	AFPX-C30TD	Approx. 440 g
	AFPX-C30P	Approx. 460 g
	AFPX-C30PD	Approx. 440 g
	AFPX-C60R	Approx. 780 g
	AFPX-C60RD	Approx. 760 g
	AFPX-C60T	Approx. 700 g
	AFPX-C60TD	Approx. 680 g
	AFPX-C60P	Approx. 700 g
	AFPX-C60PD	Approx. 680 g
Expansion I/O unit	AFPX-E16X	Approx. 190 g
	AFPX-E14YR	Approx. 230 g
	AFPX-E16R	Approx. 195 g
	AFPX-E16T	Approx. 180 g
	AFPX-E16P	Approx. 180 g
	AFPX-E30R	Approx. 470 g
	AFPX-E30RD	Approx. 450 g
	AFPX-E30T	Approx. 430 g
	AFPX-E30TD	Approx. 410 g
	AFPX-E30P	Approx. 430 g
	AFPX-E30PD	Approx. 410 g
Expansion FP0 adapter	AFPX-EFP0	Approx. 65 g

Unit		Model No.	Weight
FP-X Communi-cation cassette	COM1	AFPX-COM1	Approx. 20 g
	COM2	AFPX-COM2	
	COM3	AFPX-COM3	
	COM4	AFPX-COM4	
	COM5	AFPX-COM5	Approx. 25 g
	COM6	AFPX-COM6	Approx. 20 g
Analog input cassette		AFPX-AD2	Approx. 25 g
Analog output cassette		AFPX-DA2	
Analog I/O cassette		AFPX-A21	
Thermocouple cassette		AFPX-TC2	
RTD cassette		AFPX-RTD2	
Input cassette		AFPX-IN8	
Output cassette		AFPX-TR8	
		AFPX-TR6P	
I/O cassette		AFPX-IN4T3	
Pulse I/O cassette		AFPX-PLS	
Master memory cassette		AFPX-MRTC	Approx. 20 g
FP-X backup battery		AFPX-BATT	Approx. 7 g

Ramco National www.PanasonicSensors.com 1-800-280-6933

Unit's current consumption table

Unit type			Current consumption of power supply for Control unit		
			100 V AC	200 V AC	24 V DC
Control unit		AFPX-C14R	185 mA or less	130 mA or less	—
		AFPX-C14RD	—	—	235 mA or less
		AFPX-C30R	410 mA or less	260 mA or less	—
		AFPX-C30RD	—	—	360 mA or less
		AFPX-C60R	540 mA or less	320 mA or less	—
		AFPX-C60RD	—	—	550 mA or less
		AFPX-C14T	160 mA or less	110 mA or less	—
		AFPX-C14P	160 mA or less	110 mA or less	—
		AFPX-C30T	360 mA or less	225 mA or less	—
		AFPX-C30P	370 mA or less	230 mA or less	—
		AFPX-C60T	370 mA or less	230 mA or less	—
		AFPX-C60P	380 mA or less	240 mA or less	—
		AFPX-C14TD	—	—	160 mA or less
		AFPX-C14PD	—	—	160 mA or less
		AFPX-C30TD	—	—	200 mA or less
		AFPX-C30PD	—	—	210 mA or less
		AFPX-C60TD	—	—	250 mA or less
		AFPX-C60PD	—	—	290 mA or less
Expansion I/O unit		AFPX-E16R Note1)	65 mA or less	40 mA or less	145 mA or less
		AFPX-E30R Note2)	310 mA or less	210 mA or less	—
		AFPX-E30RD	—	—	320 mA or less
		AFPX-E16T Note1)	20 mA or less	10 mA or less	60 mA or less
		AFPX-E16P Note1)	30 mA or less	15 mA or less	90 mA or less
		AFPX-E30T Note2)	345 mA or less	220 mA or less	—
		AFPX-E30P Note2)	350 mA or less	225 mA or less	—
		AFPX-E30TD Note2)	—	—	170 mA or less
		AFPX-E30PD Note2)	—	—	220 mA or less
		AFPX-E16X	20 mA or less	10 mA or less	35 mA or less
		AFPX-E14YR	75 mA or less	40 mA or less	210 mA or less
Communication cassette		AFPX-COM1 Note1) AFPX-COM2 Note1)	10 mA or less	10 mA or less	10 mA or less
		AFPX-COM3 Note1) AFPX-COM4 Note1)	15 mA or less	10 mA or less	15 mA or less
		AFPX-COM5 Note1)	30 mA or less	20 mA or less	75 mA or less
		AFPX-COM6 Note1)	15 mA or less	10 mA or less	15 mA or less
Application cassette Note)	Analog input cassette	AFPX-AD2 Note1)	10 mA or less	10 mA or less	15 mA or less
	Analog output cassette	AFPX-DA2 Note1)	50 mA or less	30 mA or less	120 mA or less
	Analog I/O cassette	AFPX-A21 Note1)	30 mA or less	20 mA or less	70 mA or less
	Thermocouple cassette	AFPX-TC2 Note1)	10 mA or less	5 mA or less	25 mA or less
	RTD cassette	AFPX-RTD2 Note1)	20 mA or less	10 mA or less	35 mA or less
	Input cassette	AFPX-IN8 Note1)	10 mA or less	5 mA or less	10 mA or less
	Output cassette	AFPX-TR8 Note1)	10 mA or less	5 mA or less	10 mA or less
	Output cassette	AFPX-TR6P Note1)	10 mA or less	5 mA or less	30 mA or less
	I/O cassette	AFPX-IN4T3 Note1)	10 mA or less	5 mA or less	10 mA or less
	Pulse I/O cassette	AFPX-PLS Note1)	10 mA or less	10 mA or less	15 mA or less
	Master memory cassette	AFPX-MRTC Note1)	10 mA or less	10 mA or less	10 mA or less
Programmable display		GT01,GT01R (5 VDC,RS232C)	25 mA or less	15 mA or less	80 mA or less

Ramco National www.PanasonicSensors.com 1-800-280-6933

Note1) These current consumption indicate the increased amount of the current consumption of the Control unit (refer to the example of the calculation below).

Note2) The current consumption of E30 is the current consumption at the supply terminal of E30. The current consumption of the control unit does not increase.

Unit type		Current consumption
		24 V DC
Expansion FP0 adapter	AFPX-EFP0	10 mA or less

[Example of calculation] (when 100 V AC)

C30R	+	IN8	+	TR8	+	E16R	+	EFP0
410 mA		10 mA		10 mA		65 mA		10mA + Current consumption of FP0 expansion unit

Total 495 mA or less (100 V AC)

10mA + Current consumption of FP0 expansion unit (24V DC)

Example: When one FP0 expansion unit (FP0-E32T) is connected:
FP0 expansion adapter: 10 mA or less
+ FP0-E32T: 40 mA or less
⇒ total 50 mA or less

Ramco National www.PanasonicSensors.com 1-800-280-6933

15.1.2 Performance Specifications

Item			Descriptions					
			Relay type			Transistor type		
			C14	C30	C60	C14	C30	C60
No. of control-llable I/O points		Control unit	14 points DC input: 8, Ry output: 6	30 points DC input: 16, Ry output: 14	60 points DC input: 32, Ry output: 28	14 points DC input: 8, Tr output: 6	30 points DC input: 16, Tr output: 14	60 points DC input: 32, Tr output: 28
		When using E16R expansion I/O units	Max. 30 points	Max. 46 points	Max. 76 points	Max. 30 points	Max. 46 points	Max. 76 points
		When using E30R expansion I/O units	Max. 254 points (up to 8 units)	Max. 270 points (up to 8 units)	Max. 300 points (up to 8 units)	Max. 254 points (up to 8 units)	Max. 270 points (up to 8 units)	Max. 300 points (up to 8 units)
		When using FP0 expansion units	Max. 110 points (up to 3 units)	Max. 126 points (up to 3 units)	Max. 156 points (up to 3 units)	Max. 110 points (up to 3 units)	Max. 126 points (up to 3 units)	Max. 156 points (up to 3 units)
Programming method/Control method			Relay symbol/Cyclic operation					
Program memory			Built-in Flash ROM (without backup battery)					
Program capacity			C14 : 16k steps C30/C60: 32k steps					
No. of instruction		Basic	111					
		High-level	216					
Operation speed			From 0.32 µs/step (by basic instruction)					
		Base time	0.2 ms	0.24 ms	0.3 ms	0.2 ms	0.23 ms	0.28 ms
I/O refresh + base time			With E16: 0.34 ms x No. of units With E30: 0.47 ms x No. of units With expansion FP0 adapter: 1.4 ms + FP0 expansion unit refresh time Note9)					
Operation memory	Relay	External input (X) Note1)	1760 points (X0 to X109F)					
		External output (Y) Note1)	1760 points (Y0 to Y109F)					
		Internal relay (R)	4096 points (R0 to R255F)					
		Special internal relay (R)	192 points					
		Timer/ Counter (T/C)	1024 points Note2) (for initial setting, Timer: 1008 points (T0 to T1007), Counter: 16 points (C1008 to C1023)) Timer: can count up to (in units of 1ms, 10ms, 100ms or 1s)× 32767. Counter: Can count up to 1 to 32767.					
		Link relay(L)	2048 points (L0 to L127F)					
	Memory area	Data register (DT)	C14: 12285 words (DT0 to DT12284) C30/C60: 32765 words (DT0 to DT32764)					
		Special data register (DT)	374 words			384 words		
		Link data register (LD)	256 words (LD0 to LD255)					
		File register	None					
		Index register (I)	14 words (I0 to ID)					
Differential points			Unlimited points					
Master control relay points (MCR)			256 points					
No. of labels (JP and LOOP)			256 points					
No. of step ladders			1000 stages					
No. of subroutines			500 subroutines					

Ramco National www.PanasonicSensors.com 1-800-280-6933

Item		Descriptions					
		Relay type			Transistor type		
		C14	C30	C60	C14	C30	C60
No. of interrupt programs		Input 14 programs, periodical interrupt 1 program			Input 8 programs, periodical interrupt 1 program		
Sampling trace		Available Sampling by commands/Sampling at regular time intervals For one sampling: 16 bits + 3 words C14=300 samples C30/C60=1000 samples					
Comment storage		All comments including I/O comments, explanatory notes, interlinear comments can be stored. (Backup battery is not necessary. 328 kbytes)					
PLC link function		Max. 16 units, link relay: 1024 points, link register: 128 words (Data transmission and remote programming is not possible.)					
Constant scan		Available					
Password		Available (4 digits, 8 digits)					
Upload protection		Available					
Self-diagnosis function		Such as watchdog timer, program syntax check					
Program editing during RUN		Available					
High-speed counter Note3) Note4)	Input of main unit	Single-phase 8 chs or 2-phase 4 chs With single-phase 8 chs (10 kHz each), with 2-phase 4 chs (5 kHz each)			Single-phase 8 chs (High-speed: 4 chs, medium-speed: 4 chs), 2-phase 4 chs (High-speed: 2 chs, medium-speed: 2 chs) With high-speed single-phase: 1 ch (100 kHz) 2 chs (80 kHz) 3 chs (60 kHz) 4 chs (50 kHz) With high-speed 2-phase: 1 ch (35 kHz) 2 chs (25 kHz) With medium-speed single-phase: 4 chs (10 kHz each) With Medium-speed 2-phase: 2 chs (5 kHz each)		
	Pulse I/O cassette is installed	C14: Single-phase 2 chs (2-phase 1 ch) C30/C60: Single-phase 4 chs (2-phase 2 chs) when 2 cassettes are installed. With single-phse 2 chs (80 kHz each), 2-phase 1 ch (30 kHz) with single-phase 4 chs (50 kHz each), 2-phase 2 chs (25 kHz each)			Pulse I/O cassette cannot be installed.		

Ramco National www.PanasonicSensors.com 1-800-280-6933

Item		Descriptions					
		Relay type			Transistor type		
		C14	C30	C60	C14	C30	C60
Pulse output/ PWM output Note4)	Input of main unit	None			C14: 3 chs (High-speed 2 chs, medium-speed 1 ch) C30/C60: 4 chs (High-speed 2 chs, medium-speed 2 chs) Pulse: With high-speed 2 chs (100 kHz each) For linear interpolation, composite speed: 100 kHz With medium-speed 2 chs (20 kHz each) For linear interpolation, composite speed: 20 kHz PWM: High-speed: 1.5 Hz to 41.7 kHz Medium-speed: 1.5 Hz to 15.6 kHz 1000 resolution (12.5 kHz or less), 100 resolution (over 12.5 kHz)		
	Pulse I/O cassette is installed	C14: 1 ch C30/C60: 2 chs when 2 cassettes are installed. Pulse: with 1 ch (100 kHz), with 2 chs (80 kHz each) PWM: 1.5 Hz to 41.7 kHz 1000 resolution (12.5 kHz or less), 100 resolution (over 12.5 kHz)			Pulse I/O cassette cannot be installed.		
Pulse catch input/interrupt input		14 points (Input of main unit: 8 points X0 to X7, Pulse I/O cassette: 3 points x 2)			8 points (Input of main unit: 8 points X0 to X7)		
Periodical interrupt		0.5 ms to 30 s					
Potentiometer (Volume) input		C14/C30: 2 points, resolution 10 bits (K0 to K1000) C60 : 4 points, resolution 10 bits (K0 to K1000)					
Constant scan		Available					
Realtime clock		Available (year, month, day, hour, minute, second and day of week) (However, this can only be used when AFPX-MRTC and an optional battery has been installed.) Note5)					
Flash ROM backup Note6)	Backup by F12, P13 instructions	Data register (32765 words)					
	Automatic backup when power is cut off	Counter 16 points (C1008 to C1023) Note10), internal relay 128 points (WR248 to WR255), data register 55 words (C14: DT12230 to DT12284, C30/C60: DT32710 to DT32764)					
Battery backup		Memory that is set as hold area at system register (However, only when an optional battery has been installed.) Note7)					
Battery life Note8)	When AFPX-MRTC is not installed	C14: 3.3 years or more C30/C60: 2.7 years or more					
	When AFPX-MRTC is installed	C14: 2.1 years or more C30/C60: 1.8 years or more Note) More than 2 batteries can be installed. In that case, the battery life is the value multiplied by the No. of batteries.					

Ramco National www.PanasonicSensors.com 1-800-280-6933

Note1) The number of points actually available for use is determined by the hardware configuration.
Note2) The number of points can be increased by using an auxiliary timer.
Note3) This is the specifications when the rated input voltage is 24 V DC at 25 °C. The frequency will decrease depending on voltage, temperature or usage condition.
Note4) The maximum frequency varies depending on the use.
Note5) Precision of realtime clock:
- At 0°C: less than 119 seconds per month
- At 25°C: less than 51 seconds per month
- At 55°C: less than 148 seconds per month

Note6) Writing is available up to 10000 times. When the optional battery is used, all areas can be backed up. Areas to be held and not held can be specified using the system registers.
Note7) If an area is held when the battery is not installed, the value of data may be indefinite as it is not cleared to 0 when the power is turned on. When the battery ran out of the power, the data at the hold area will be indefinite.
Note8) Note that the lifetime in actual use may be shorter than the typical lifetime depending on the use conditions.
Note9) Refresh time of FP0 expansion unit

8-point unit	No. of units used x 0.8 ms
16-point unit	No. of units used x 1.0 ms
32-point unit	No. of units used x 1.3 ms
64-point unit	No. of units used x 1.9 ms

Note10) The contact information and the elapsed value (EV) of the counter is backed up. The setting value (SV) is not held.

15.1.3 Communication Specifications

	Computer link Note1)			**General-purpose serial communication** Note1)			**PC(PLC) link**	**MODBUS RTU** Note1)		
	1:1 communication		**1:N commu-nication**	**1:1 communication**		**1:N commu-nication**		**1:1 communication**		**1:N commu-nication**
Inter-face	RS232C	RS422	RS485	RS232C	RS422	RS485	RS232C RS422 RS485	RS232C	RS422	RS485
Target items	**TOOL port** **AFPX -COM1 -COM2 -COM4**	**AFPX -COM3**	**AFPX -COM3 -COM4 -COM6**	**TOOL port** **AFPX -COM1 -COM2 -COM4**	**AFPX -COM3**	**AFPX -COM3 -COM4 -COM6**	**AFPX -COM1 -COM2 -COM3 -COM4 -COM6**	**AFPX -COM1 -COM2 -COM4**	**AFPX -COM3**	**AFPX -COM3 -COM4 -COM6**
Commu-nication method	Half-duplex communication		Two-wire, half-duplex communi-cation	Half-duplex communication		Two-wire, half-duplex communi-cation	Token bus (Floating master)	Half-duplex communication		Two-wire, half-duplex communi-cation

Note1) Although it has adequate tolerance to noise, it is recommendable to make the user program to execute retransmission(in order to improve reliability of the communication when a communication error occurs due to excessive noises or when a receiver equipment cannot receive data temporarily).

Communication port (Ethernet)

	Computer link	**General-purpose serial communication**
Interface	IEEE802. 3u, 10BASE-T/100BASE-TX	
No. of connections	Max. 1 connection (Client) Max. 3 connections (Server)	Max. 1 connection
Server	Client, Server	Client, Server
Target item	AFPX-COM5	

Ramco National www.PanasonicSensors.com 1-800-280-6933

Communication specifications 1 Interface: : RS232C, RS422, RS485

Item			Specifications		
Interface			RS232C (non-isolated)	RS422 (isolated) Note1)	RS485 (isolated) Note1) 2)
Communication mode			1:1 communication		1:N communication
Communication method			Half-duplex communication		Two-wire half-duplex communication
Synchronous method			Start stop synchronous system		
Transmission line			Multicore shielded line		Shielded twisted-pair cable or VCTF
Transmission distance			15 m	Max. 1200 m Note1)	Max. 1200 m Note1) 2)
Baud rate Note3) (to be set by system register) Note8)			300, 600, 1200, 2400, 4800, 9600, 19200, 38400, 57600, 115200 bps		
Trans-mission code	Computer link		ASCII, JIS7, JIS8		
	General-purpose serial communication		ASCII, JIS7, JIS8, Binary		
	MODBUS RTU		Binary		
Communication format (to be set by system register) Note4)		Data length	7 bits/8 bits		
		Parity	None/Even/Odd		
		Stop bit	1 bit/2 bits		
		Start code	STX/No STX		
		End code	CR/CR+LF/None/ETX		
No. of connected units Note5) 6) 7)			2 units		Max. 99 units (max. 32 units when C-NET adapter is connected.)

Note1) When connecting a commercially available device that has an RS485 interface, please confirm operation using the actual device. In some cases, the number of units, transmission distance, and baud rate vary depending on the connected device.

Note2) The values for the transmission distance, baud rate and number of units should be within the values noted in the graph below.

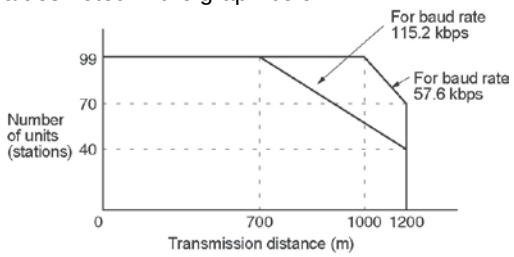

When using a baud rate of 300 bps to 38400 bps, you can set up to a maximum of 99 units (stations) and maximum transmission distance of 1200 m.

Note3) Only 9600 bps or 19200 bps can be specified when the C-NET adapter is connected with the RS485 interface.

Note4) The start code and end code can be used only in the general-purpose serial communication mode.

Note5) The converter SI-35 manufactured by Lineeye Co., Ltd is recommendable for the RS485 at the computer side. Adjust the response time for the FP-X by the SYS1 instruction if necessary.

Note6) Unit numbers should be registered by the system register.

Note7) The termination resistance of the RS485/RS422 in the COM3,COM4 and COM6 is specified by the dip switch in the communication cassette. There is no termination resistance at the RS232C port.

Note8) The baud rates of 300, 600 and 1200 bps can be specified by the SYS instruction only (Ver2.0 or later).

Ramco National www.PanasonicSensors.com 1-800-280-6933

Communication specifications 2 Interface: Ethernet

Item		Specifications
Interface		IEEE802. 3u, 10BASE-T/100BASE-TX Connector shape: RJ45
Transmission specifications	Baud rate	100 Mpbs/10 Mbps
	Transmission method	Baseband
	Max. segment length	100 m Note1)
Communication cable		UTP (Category 5)
Protocol		TCP/IP, UDP/IP, ICMP, ARP, DHCP
Function		Auto-negotiation function MDI/MDI-X Auto-crossover function

Note1) The length between a HUB and the module.

Ramco National www.PanasonicSensors.com 1-800-280-6933

15.2 Table of I/O Number Allocation

15.2.1 I/O Allocation of FP-X Control Unit

The I/O allocation of the FP-X control unit is fixed.

I/O numbers

Type of control unit	Number of allocation	I/O number
FP-X C14 control unit	Input (8 points)	X0 to X7
	Output (6 points)	Y0 to Y5
FP-X C30 control unit	Input (16 points)	X0 to XF
	Output (1 points)	Y0 to YD
FP-X C60 control unit	Input (32 points)	X0 to XF X10 to X1F
	Output (28 points)	Y0 to YD Y10 to Y1D

15.2.2 FP0 Expansion Unit Allocation

The FP-X expansion unit is installed on the right side of the FP-X control unit.

I/O numbers (when installed as the first expansion unit)

Type of expansion unit	Number of allocation	I/O number
FP-X E16 expansion I/O unit	Input (8 points)	X300 to X307
	Output (8 points)	Y300 to Y307
FP-X E30 expansion I/O unit	Input (16 points)	X300 to X30F
	Output (14 points)	Y300 to Y30D

Note) E16R cannot be connected on the right side of E16R.

15.2.3 FP0 Expansion Unit Allocation

Only one expansion FP0 adapter can be connected at the last position of the FP-X expansion bus.
The I/O allocation varies depending on the installation location of the expansion FP0 adapter

Expansion location	Expansion unit 1	Expansion unit 2	Expansion unit 3
Expansion 1st unit	X300 to X31F	X320 to X33F	X340 to X35F
	Y300 to Y31F	Y320 to Y33F	Y340 to Y35F
Expansion 2nd unit	X400 to X41F	X420 to X43F	X440 to X45F
	Y400 to Y41F	Y420 to Y43F	Y440 to Y45F
Expansion 3rd unit	X500 to X51F	X520 to X53F	X540 to X55F
	Y500 to Y51F	Y520 to Y53F	Y540 to Y55F
Expansion 4th unit	X600 to X61F	X620 to X63F	X640 to X65F
	Y600 to Y61F	Y620 to Y63F	X640 to X65F
Expansion 5th unit	X700 to X71F	X720 to X73F	X740 to X75F
	Y700 to Y71F	Y720 to Y73F	Y740 to Y75F
Expansion 6th unit	X800 to X81F	X820 to X83F	X840 to X85F
	Y800 to Y81F	Y820 to Y83F	Y840 to Y85F
Expansion 7th unit	X900 to X91F	X920 to X93F	X940 to X95F
	Y900 to Y91F	Y920 to Y93F	Y940 to Y95F
Expansion 8th unit	X1000 to X101F	X1020 to X103F	X1040 to X105F
	Y1000 to Y101F	Y1020 to Y103F	Y1040 to Y105F

Note) The ranges of the I/O numbers which are actually used differ depending on the units.

Ramco National www.PanasonicSensors.com 1-800-280-6933

I/O numbers (when installed as the first expansion unit)

I/O do not need to be set as I/O allocation is performed automatically when an expansion unit is added. The I/O allocation of expansion unit is determined by the installation location.

Hundred's digit

Carry the digit of hundreds place one by one since the second expansion unit.

Type of unit		Number of allocation	Expansion unit 1	Expansion unit 2	Expansion unit 3
FP0 Expansion unit	FP0-E8X	Input (8 points)	X300 to X307	X320 to X327	X340 to X347
	FP0-E8R	Input (4 points)	X300 to X303	X320 to X323	X340 to X343
		Output (4 points)	Y300 to Y303	Y320 to Y323	Y340 to Y343
	FP0-E8YT/P FP0-E8YR	Output (8 points)	Y300 to Y307	Y320 to Y327	Y340 to Y347
	FP0-E16X	Input (16 points)	X300 to X30F	X320 to X32F	X340 to X34F
	FP0-E16R FP0-E16T/P	Input (8 points)	X300 to X307	X320 to X327	X340 to X347
		Output (8 points)	Y300 to Y307	Y320 to Y327	Y340 to Y347
	FP0-E16YT/P	Output (16 points)	Y300 to Y30F	Y320 to Y32F	Y340 to Y34F
	FP0-E32T/P	Input (16 points)	X300 to X30F	X320 to X32F	X340 to X34F
		Output (16 points)	Y300 to Y30F	Y320 to Y32F	Y340 to Y34F
FP0 analog I/O unit	FP0-A21	Input (16 points) CH0	WX30 (X300 to X30F)	WX32 (X320 to X32F)	WX34 (X340 to X34F)
		Input (16 points) CH1	WX31 (X310 to X31F)	WX33 (X330 to X33F)	WX35 (X350 to X35F)
		Output (16 points)	WY30 (Y300 to Y30F)	WY32 (Y320 to Y32F)	WY34 (Y340 to Y34F)
FP0 A/D conversion unit FP0 thermo-couple unit	FP0-A80 FP0-TC4 FP0-TC8	Input (16 points) CH0, 2, 4, 6	WX30 (X300 to X30F)	WX32 (X320 to X32F)	WX34 (X340 to X34F)
		Input (16 points) CH1, 3, 5, 7	WX31 (X310 to X31F)	WX33 (X330 to X33F)	WX35 (X350 to X35F)
FP0 RTD unit	FP0-RTD6	Input (16 points) CH0, 2, 4	WX2 (X20 to X2F)	WX4 (X40 to X4F)	WX6 (X60 to X6F)
		Input (16 points) CH1, 3, 5	WX3 (X30 to X3F)	WX5 (X50 to X5F)	WX7 (X70 to X7F)
		Output (16 points)	WY2 (Y20 to Y2F)	WY4 (Y40 to Y4F)	WY6 (Y60 to Y6F)
FP0 D/A conversion unit	FP0-A04V FP0-A04I	Input (16 points)	WX30 (X300 to X30F)	WX32 (X320 to X32F)	WX34 (X340 to X34F)
		Output (16 points) CH0, 2	WY30 (Y300 to Y30F)	WY32 (Y320 to Y32F)	WY34 (Y340 to Y34F)
		Output (16 points) CH1, 3	WY31 (Y310 to Y31F)	WY33 (Y330 to Y33F)	WY35 (Y350 to Y35F)
FP0 I/O link unit	FP0-IOL	Input 32 points	X300 to X31F	X320 to X33F	X340 to X35F
		Output 32 points	Y300 to Y31F	Y320 to Y33F	Y340 to Y35F

- The data for the each channels of FP0 A/D conversion unit (FP0-A80), FP0 thermocouple unit (FP0-TC4/FP0-TC8), FP0 RTD unit(FP0-RTD6) and FP0 D/A conversion unit (FP0-A04V/FP0-A04I) is converted and loaded with a user program that includes a switching flag to convert the data.
- Regarding FP0 CC-Link slave unit, please refer to the exclusive manual.

Ramco National www.PanasonicSensors.com 1-800-280-6933

15.2.4 I/O Allocation of FP-X Add-on Cassette

The FP-X add-on cassette is mounted on the FP-X control unit.

I/O numbers

Type of control unit			I/O No.	
			Cassette mounting part 1 Slot 0	Cassette mounting part 2 Slot 1
Communication cassette	FP-X communication cassette	AFPX-COM1	–	–
	FP-X communication cassette	AFPX-COM2	–	–
	FP-X communication cassette	AFPX-COM3	–	–
	FP-X communication cassette	AFPX-COM4	–	–
	FP-X communication cassette	AFPX-COM5	–	–
	FP-X communication cassette	AFPX-COM6	–	–
Application cassette	FP-X analog input cassette Note2)	AFPX-AD2	CH0 WX10 CH1 WX11	CH0 WX20 CH1 WX21
	FP-X analog output cassette	AFPX-DA2	CH0 WY10 CH1 WY11	CH0 WY20 CH1 WY21
	FP-X analog I/O cassette	AFPX-A21	CH0 WX10 CH1 WX11 WY10	CH0 WX20 CH1 WX21 WY20
	FP-X thermocouple cassette	AFPX-TC2	CH0 WX10 CH1 WX11	CH0 WX20 CH1 WX21
	FP-X RTD cassette	AFPX-RTD2	CH0 WX10 CH1 WX11	CH0 WX20 CH1 WX21
	FP-X input cassette	AFPX-IN8	From X100	From X200
	FP-X output cassette	AFPX-TR8	From Y100	From Y200
	FP-X output cassette	AFPX-TR6P	From Y100	From Y200
	FP-X I/O cassette	AFPX-IN4T3	From X100 From Y100	From X200 From Y200
	FP-X pulse I/O cassette Note3)	AFPX-PLS	From X100 From Y100	From X200 From Y200
	FP-X master memory cassette	AFPX-MRTC	–	–

Note1) There is no I/O for the communication cassette and master memory cassette.
Note2) Digital conversion values are K0 to 4000. As the resolution is 12 bits, upper 4 bits are always 0.
Note3) The pulse I/O cassette cannot be used with the FP-X Tr type.

Ramco National www.PanasonicSensors.com 1-800-280-6933

15.3 Relays, Memory Areas and Constants

Item		Number of points and range of memory area available for use		Function
		C14	C30 C60	
Relay	External input Note1) (X)	1760 points (X0 to X109F)		Turns on or off based on external input.
	External output Note1) (Y)	1760 points (Y0 to Y109F)		Externally outputs on or off state
	Internal relay Note2) (R)	4096 points (R0 to R255F)		Relay which turns on or off only within program.
	Link relay Note2) (L)	2048 points (L0 to L127F)		This relay is a shared relay used for PLC link.
	Timer Note2) (T)	1024 points (T0 to T1007/C1008 to C1023) Note3)		This goes on when the timer reaches the specified time. It corresponds to the timer number.
	Counter Note2) (C)			This goes on when the counter increments. It corresponds to the counter number.
	Special internal relay (R)	192 points (R9000 to R911F)		Relay which turns on or off based on specific conditions and is used as a flag.
Memory area	External input Note1) (WX)	110 words (WX0 to WX109)		Code for specifying 16 external input points as one word (16 bits) of data.
	External output Note1) (WY)	110 words (WY0 to WY109)		Code for specifying 16 external output points as one word (16 bits) of data.
	Internal relay Note2) (WR)	256 words (WR0 to WR255)		Code for specifying 16 internal relay points as one word (16 bits) of data.
	Link relay (WL)	128 words (WL0 to WL127)		Code for specifying 16 link relay points as one word (16 bits) of data.
	Data register Note2) (DT)	12285 words (DT0 to DT12284)	32765 words (DT0 to DT32764)	Data memory used in program. Data is handled in 16-bit units (one word).
	Link register Note2) (LD)	256 words (LD0 to LD255)		This is a shared data memory which is used within the PLC link. Data is handled in 16-bit units (one word).
	Timer/Counter set value area Note2) (SV)	1024 words (SV0 to SV1023)		Data memory for storing a target value of a timer and setting value of a counter. Stores by timer/counter number
	Timer/Counter elapsed value area Note2) (EV)	1024 words (EV0 to EV1023)		Data memory for storing the elapsed value during operation of a timer/counter. Stores by timer/counter number.
	Special data register (DT)	374 words (DT90000 to DT90373)		Data memory for storing specific data. Various settings and error codes are stored.
	Index register (I)	14 words (I0 to ID)		Register can be used as an address of memory area and constants modifier.

Ramco National www.PanasonicSensors.com 1-800-280-6933

Item		Number of points and range of memory area available for use		Function
		C14	C30 C60	
Control instruction point	Master control relay points (MCR) (MC)	256 points		
	No. of labels (JP+LOOP) (LBL)	256 points		
	No. of step ladders (SSTP)	1000 stages		
	No. of subroutines (SUB)	500 subroutines		
	No. of interrupt programs (INT)	Ry type: 14 input programs, 1 periodical program Tr type: 8 input programs, 1 periodical program		
Constant	Decimal constants (K)	K-32, 768 to K32, 767 (for 16-bit operation)		
		K-2, 147, 483, 648 to K2, 147, 483, 647 (for 32-bit operation)		
	Hexadecimal constants (H)	H0 to HFFFF (for 16-bit operation)		
		H0 to HFFFFFFFF (for 32-bit operation)		
	Floating point type (F)	F-1.175494 x 10^{-38} to F-3.402823 x 10^{38}		
		F 1.175494 x 10^{-38} to F 3.402823 x 10^{38}		

Note1) The number of points noted above is the number reserved as the calculation memory. The actual number of points available for use is determined by the hardware configuration.

Note2) If no battery is used, only the fixed area is backed up. (counters 16 points: C1008 to C1023, internal relays 128 points: R2480 (WR248) to R255F (WR255), data registers 55 words, C14: DT12230 to DT12284, C30/C60: DT32710 to DT32764). Writing is available up to 10000 times. Then the optional battery is used, all area can be backed up.
Areas to be held and not held can be specified using the system registers. If an area is held when the battery is not installed, the value of data may be indefinite as it is not cleared to 0 when the power is turned on. When the battery ran out of the power, the data at the hold area will be indefinite.

Note3) The points for the timer and counter can be changed by the setting of system register 5. The number given in the table are the numbers when system register 5 is at its default setting.

Ramco National www.PanasonicSensors.com 1-800-280-6933

Chapter 16

Dimensions

Ramco National www.PanasonicSensors.com 1-800-280-6933

16.1 Dimensions

16.1.1 Control Unit

■AFPX−C14

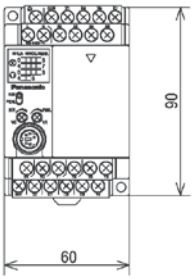

■AFPX−C30

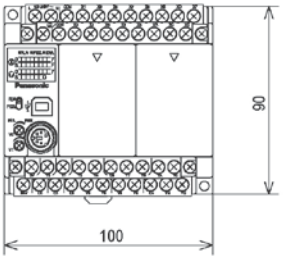

■AFPX−C60

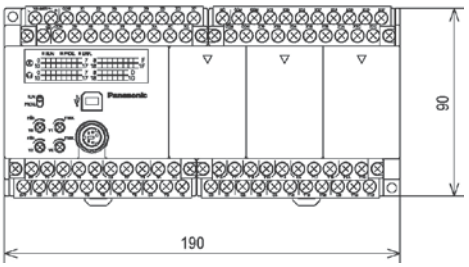

■When installing Add-on cassette

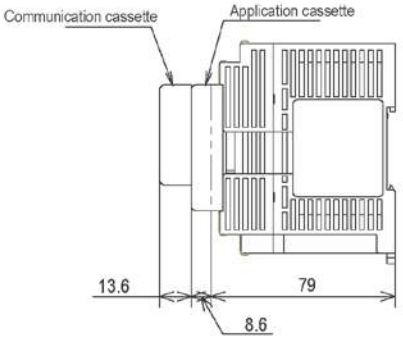

●Communication cassette AFPX−COM5

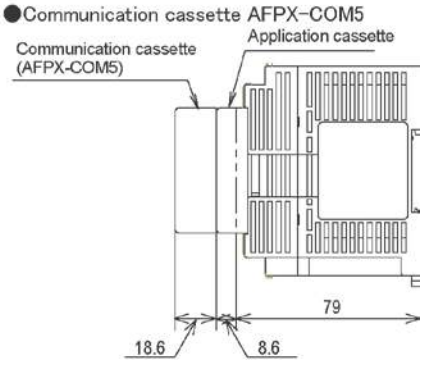

Note) AFPX-COM5 is 5 mm taller than other communication cassettes.

Ramco National www.PanasonicSensors.com 1-800-280-6933

■When installing cables

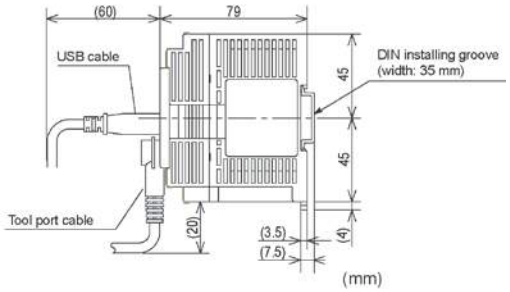

16.1.2 Expansion Unit

■AFPX-E16/E14

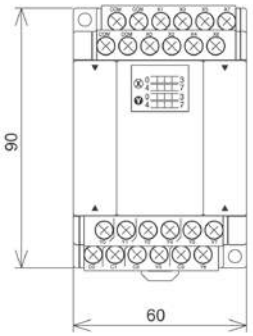

■AFPX-E30

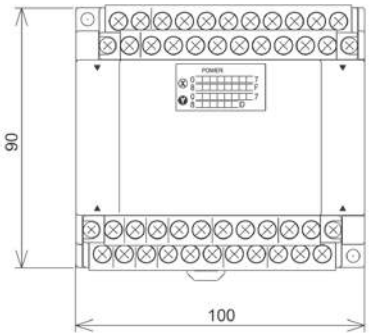

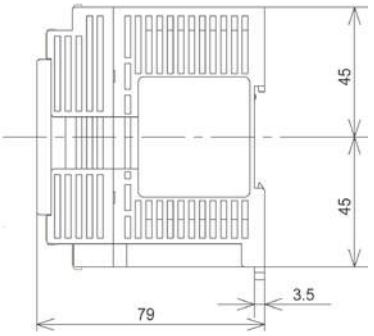

16.1.3 Expansion FP0 Adapter

■AFPX-EFP0

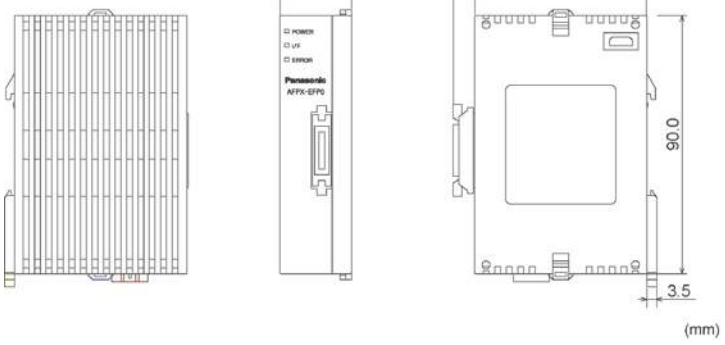

16.1.4 Dimension Diagram for Installation

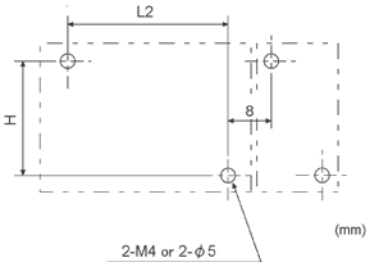

Model	L2	H
C14, E16	52	82
C30, E30	92	
C60	182	

(Tolerance ±0.5)

Ramco National www.PanasonicSensors.com 1-800-280-6933

16.2 Cable/Adapter Specifications

16.2.1 AFC8503/AFC8503S (PC)

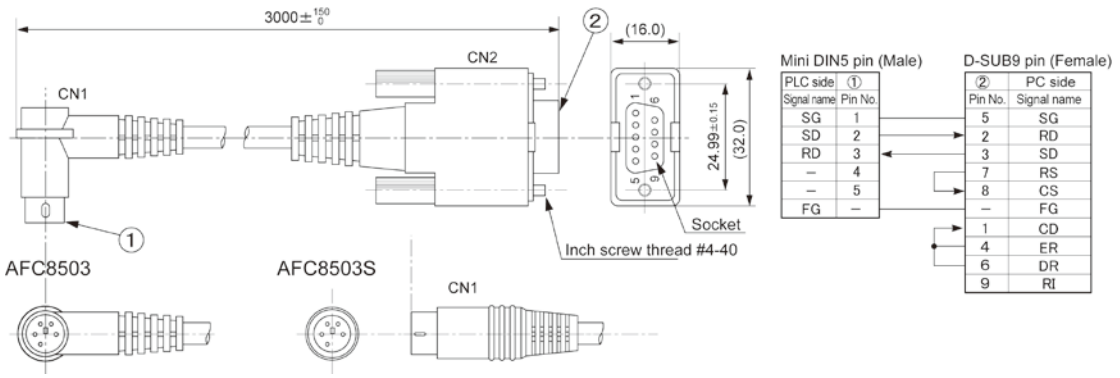

Mini DIN5 pin (Male)

PLC side	①
Signal name	Pin No.
SG	1
SD	2
RD	3
–	4
–	5
FG	–

D-SUB9 pin (Female)

②	PC side
Pin No.	Signal name
5	SG
2	RD
3	SD
7	RS
8	CS
–	FG
1	CD
4	ER
6	DR
9	RI

(Unit: mm)

16.2.2 AFC85305/AFC8531/AFC8532 (For extending for the tool port)

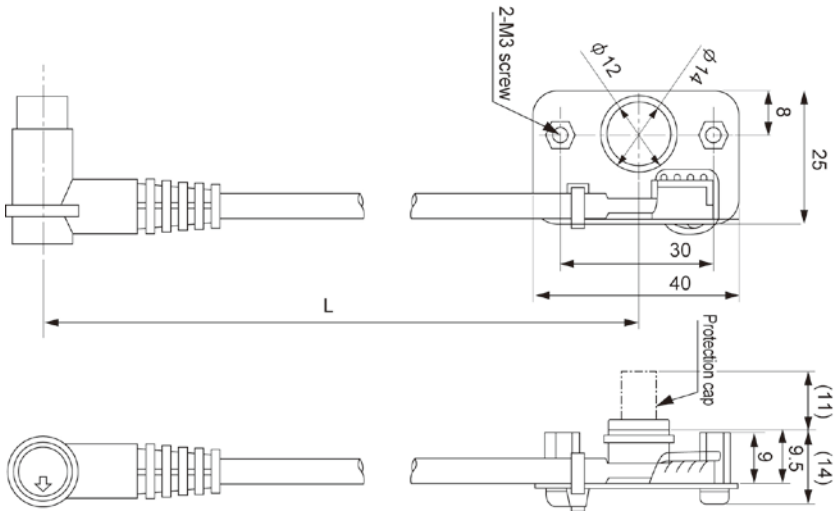

	L (mm)
AFC85305	500±100 0
AFC8531	1000±100 0
AFC8532	2000±100 0

Ramco National www.PanasonicSensors.com 1-800-280-6933

Chapter 17

Appendix

17.1 System Registers / Special Internal Relays / Special Data Registers

Precaution for System Registers

What is the system register area

- System registers are used to set values (parameters) which determine operation ranges and functions used. Set values based on the use and specifications of your program.
- There is no need to set system registers for functions which will not be used.

Type of system registers

1. Allocation of timers and counters (System registers 5)
The number of timers and counters is set by specifying the starting counter number.

2. Hold/non-hold type setting (System registers 6 to 14)
When these registers are set to "hold type", the values in the relays and data memory will be retained even if the system is switched to PROG. mode or the power is turned off. If set to "non-hold type" the values will be cleared to "0".

3. Operation mode setting on error (System registers 4, 20 and 26)
Set the operation mode when errors such as battery error, duplicated use of output, I/O verification error and operation error occur.

4. Time settings (System registers 31 to 36)
Set time-out error detection time and the constant scan time.

5. MEWNET-W0 PC(PLC) link settings (System registers 40 to 47, 50 to 57)
These settings are for using link relays and link registers for MEWNET-W0 PC(PLC) link communication.
Note) The default value setting is "no PC(PLC) link communication".

6. Input settings (System registers 400 to 406)
When using the high-speed counter function, pulse catch function or interrupt function, set the operation mode and the input number to be used for the function.

7. Tool and COM ports communication settings (System registers 410 to 421)
Set these registers when the Tool port and COM ports are to be used for computer link, general-purpose serial communication, PC(PLC) link, and modem communication.

8. Input time constant settings (System registers 430 to 437)
Changing the input signal width to be loaded enables to prevent the malfunctions caused by chattering or noises.

Ramco National www.PanasonicSensors.com 1-800-280-6933

Checking and changing the set value of system register

If you are going to use a value which is already set(the value which appears when read), there is no need write it again.

Using programming tool software

Produce:

1. Set the control unit in the PROG mode.
2. Option ->PLC Configuration
3. When the function for which setting are to be entered is selected in the PLC Configuration dialog box, the value and setting status for the selected system register are displayed. To change the value and setting status, write in the new value and /or select the setting status.
4. To register these settings, choose OK

Precautions for system register setting

-System register settings are effective from the time they are set. However, the system registers after No. 400 become effective when the mode is changed from PROG. mode to RUN. With regard to the modem connection setting, when the power is turned off and on or when the mode is changed from PROG. to RUN, the controller sends a command to the modem which enables it for reception.

-When the initialized operation is performed, all set system register values (parameters) will be initialized

Ramco National www.PanasonicSensors.com 1-800-280-6933

17.1.1 Table of System Registers for FP-X

Item	Add-ress	Name	Default value	Description	
Hold/ Non-hold 1	5	Starting number setting for counter	1008	0 to 1024	• These settings are effective if the optional backup battery is installed. • If no backup battery is used, do not change the default settings. Otherwise proper functioning of hold/non-hold values cannot be guaranteed.
	6	Hold type area starting number setting for timer and counter	1008	0 to 1024	
	7	Hold type area starting number setting for internal relays	248	0 to 256	
	8	Hold type area starting number setting for data registers	C14: 12230 C30, C60: 32710	0 to 32765	
	14	Hold or non-hold setting for step ladder process	Non-hold	Hold/ Non-hold	
	4	Previous value is held for a leading edge detection instruction (DF instruction) with MC	Hold	Hold/ Non-hold	
Hold/ Non-hold 2	10	Hold type area starting number for PC(PLC) W0-0 link relays	64	0 to 64	
	11	Hold type area starting number for PC(PLC) W0-1 link relays	128	64 to 128	
	12	Hold type area starting number for PC(PLC) W0-0 link registers	128	0 to 128	
	13	Hold type area starting number for PC(PLC) W0-1 link registers	256	128 to 256	
Action on error	20	Disable or enable setting for duplicated output	Disabled	Disabled/Enabled	
	23	Operation setting when an I/O verification error occurs	Stop	Stop/Continuation of operation	
	26	Operation setting when an operation error occurs	Stop	Stop/Continuation of operation	
	4	Alarm battery error (Operating setting when battery error occurs)	Disabled	Dis-abled: When a battery error occurs, a self-diagnostic error is not issued and the ERROR/ALARM LED does not flash. Ena-bled: When a battery error occurs, a self-diagnostic error is issued and the ERROR/ALARM LED flashes.	
Time set-ting	31	Wait time setting for multi-frame communication	6500.0 ms	10 to 81900 ms	
	32	Timeout setting for SEND/RECV, RMRD/RMWT commands	10000.0 ms	10 to 81900 ms	
	34	Constant value settings for scan time	Normal scan	0: Normal scan 0 to 350 ms: Scans once each specified time interval	
	36	Expansion unit recognition time	0 (No wait time)	0 to 10 s (0.1 second bit)	

Ramco National www.PanasonicSensors.com 1-800-280-6933

FP-X

Item	Address	Name	Default value	Description
PC (PLC) link W0-0 setting	40	Range of link relays used for PC(PLC) link	0	0 to 64 words
	41	Range of link data registers used for PC(PLC) link	0	0 to 128 words
	42	Starting number for link relay transmission	0	0 to 63
	43	Link relay transmission size	0	0 to 64 words
	44	Starting number for link data register transmission	0	0 to 127
	45	Link data register transmission size	0	0 to 127 words
	46	PC(PLC) link switch flag	Normal	Normal/reverse
	47	Maximum unit number setting for MEWNET-W0 PC(PLC) link	16	1 to 16
PC (PLC) link W0-1 setting	50	Range of link relays used for PC(PLC) link	0	0 to 64 words
	51	Range of link data registers used for PC(PLC) link	0	0 to 128 words
	52	Starting number for link relay transmission	64	64 to 127
	53	Link relay transmission size	0	0 to 64 words
	54	Starting number for link data register transmission	128	128 to 255
	55	Link data register transmission size	0	0 to 127 words
	57	Maximum unit number setting for MEWNET-W0 PC(PLC) link	16	1 to 16

Ramco National www.PanasonicSensors.com 1-800-280-6933

FP-X Tr type

Item	Add-ress	Name	Default value	Description
Cont-roller input settings 1 (HSC)	**400**	**High-speed counter settings (X0 to X3)**	CH0: Do not set input X0 as high-speed counter	Do not set input X0 as high-speed counter. Incremental input (X0) Decremental input (X0) Two-phase input (X0, X1) Individual input (X0, X1) Incremental/decremental control input (X0, X1)
			CH1: Do not set input X1 as high-speed counter	Do not set input X1 as high-speed counter. Incremental input (X1) Decremental input (X1)
			CH2: Do not set input X2 as high-speed counter	Do not set input X2 as high-speed counter. Incremental input (X2) Decremental input (X2) Two-phase input (X2, X3) Individual input (X2, X3) Incremental/decremental control input (X2, X3)
			CH3: Do not set input X3 as high-speed counter	Do not set input X3 as high-speed counter. Incremental input (X3) Decremental input (X3)
Cont-roller input settings 2 (HSC/ PLS)	**401**	**High-speed counter/ pulse output settings (X4 to X7)**	CH4: Do not set input X4 as high-speed counter	Do not set input X4 as high-speed counter. Incremental input (X4) Decremental input (X4) Two-phase input (X4, X5) Individual input (X4, X5) Incremental/decremental control input (X4, X5)
			X4: Normal input	Normal input Home input of pulse output CH0
			CH5: Do not set input X5 as high-speed counter	Do not set input X5 as high-speed counter. Incremental input (X5) Decremental input (X5)
			X5: Normal input	Normal input Home input of pulse output CH1
			CH6: Do not set input X6 as high-speed counter	Do not set input X6 as high-speed counter. Incremental input (X6) Decremental input (X6) Two-phase input (X6, X7) Individual input (X6, X7) Incremental/decremental control input (X6, X7)
			X6: Normal input	Normal input Home input of pulse output CH2 Reset input of high-speed counter CH0
			CH7: Do not set input X7 as high-speed counter	Do not set input X7 as high-speed counter. Incremental input (X7) Decremental input (X7)
			X7: Normal input	Normal input Home input of pulse output CH3 Reset input of high-speed counter CH2

Ramco National www.PanasonicSensors.com 1-800-280-6933

FP-X Tr type

Item	Add-ress	Name	Default value	Description
Cont-roller output settings (PLS/ PWM)	**402**	**Pulse/ PWM output settings (Y0 to Y7)**	CH0: Normal output	Normal output (Y0, Y1) Pulse output (Y0, Y1) PWM output (Y0), Normal output (Y1)
			CH1: Normal output	Normal output (Y2, Y3) Pulse output (Y2, Y3) PWM output (Y2), Normal output (Y3)
			CH2: Normal output	Normal output (Y4, Y5) Pulse output (Y4, Y5) PWM output (Y4), Normal output (Y5)
			CH3: Normal output	Normal output (Y6, Y7) Pulse output (Y6, Y7) PWM output (Y6), Normal output (Y7)
Inter-rupt/ Pulse catch settings	**403**	**Pulse catch input settings**	Not set	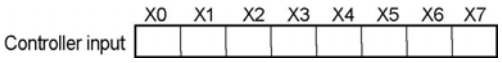 The pressed contact is set for the pulse catch input.
	404	**Interrupt input settings**	Not set	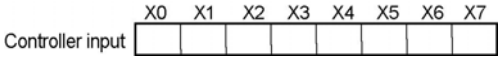 The pressed contact is set for the interrupt input.
Inter-rupt edge settings	**405**	**Interrupt edge setting for controller input**	Leading edge	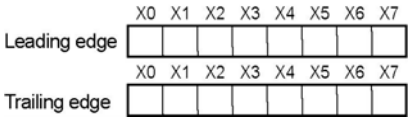 The pressed contact is up and set to trailing edge.

Note1) If CH0, CH2, CH4 and CH6 of the high-speed counter is set to the two-phase input, individual input or incremental/decremental control input, the settings of CH1, CH3, CH and CH7 will be invalid.

Note2) Only CH0 and CH2 are available for the reset input of the high-speed counter.
X6 for CH0 and X7 for CH2 can be allocated.

Note3) X4 to X7 can be used as the home input of the pulse output CH0 to CH3.
When using the home return function of the pulse output, always set the home input. In that case, X4 to X7 cannot be set as the high-speed counter.

Note4) When using the pulse output/PWM output, the controller output settings must be specified.
The output that has been set to the pulse output/PWM output cannot be used as the normal output.

Note5) If the same input has been set to the high-speed, pulse catch and interrupt input simultaneously, the following precedence order is effective:
[High-speed counter] → [Pulse catch] → [Interrupt input]

Ramco National www.PanasonicSensors.com 1-800-280-6933

FP-X Ry type

Item	Add-ress	Name	Default value	Description
Pulse I/O cassette settings (HSC/ PLS)	**400**	**High-speed counter settings (X100 to X102)**	CH8: Do not set input X100 as high-speed counter	Do not set input X100 as high-speed counter. Two-phase input (X100, X101) Two-phase input (X100, X101), Reset input (X102) Incremental input (X100) Incremental input (X100), Reset input (X102) Decremental input (X100) Decremental input (X100), Reset input (X102) Incremental/decremental input (X100, X101) Incremental/decremental input (X100, X101), Reset input (X102) Incremental/decremental control input (X100, X101) Incremental/decremental control input (X100, X101), Reset input (X102)
			CH9: Do not set input X101 as high-speed counter	Do not set input X101 as high-speed counter. Incremental input (X101) Incremental input (X101), Reset input (X102) Decremental input (X101) Decremental input (X101), Reset input (X102)
		Pulse output settings (Y100 to Y101)	CH0: Normal output	Normal output (Y100, Y101) Pulse output (Y100, Y101) PWM output (Y100), Normal output (Y101)
	401	**High-speed counter settings (X200 to X202)**	CHA: Do not set input X200 as high-speed counter	Do not set input X200 as high-speed counter. Two-phase input (X200, X201) Two-phase input (X200, X201), Reset input (X202) Incremental input (X200) Incremental input (X200), Reset input (X202) Decremental input (X202) Decremental input (X202), Reset input (X202) Incremental/decremental input (X200, X201) Incremental/decremental input (X200, X201), Reset input (X202) Incremental/decremental control (X200, X201) Incremental/decremental control (X200, X201), Reset input (X202)
			CHB: Do not set input X201 as high-speed counter	Does not set input X201 as high-speed counter. Incremental input (X201) Incremental input (X201), Reset input (X202) Decremental input (X201) Decremental input (X201), Reset input (X202)
		Pulse output settings (Y200 to Y201)	CH1: Normal output	Normal output (Y200, Y201) Pulse output (Y200, Y201) PWM output (Y200), Normal output (Y201)

Ramco National www.PanasonicSensors.com 1-800-280-6933

Note1) If the operation mode is set to Two-phase, incremental/decremental, or incremental/decremental control, the setting for CH9 is invalid in system register 400 and the setting for CHB is invalid in system register 401.

Note2) If reset input settings overlap, the CH9 setting takes precedence in system register 400 and the CHB setting takes precedence in system register 401.

Note3) CHA, CHB and CH1 input signals in system register 401 are the signals when the pulse I/O cassette (AFPX-PLS) is installed in the cassette mounting part 2.

Note4) If the operation mode setting for the pulse output CH0 and CH1 is carried out, it cannot be used as normal output.
When the operation mode for the pulse output CH0 is set to 1, the reset input setting for the high-speed counter CH8 and CH9 is invalid.
When the operation mode for the pulse output CH1 is set to 1, the reset input setting for the high-speed counter CHA and CHB is invalid.

Note5) Upgrade FPWIN GR to Ver2.6 or higher version if the No. of I/O allocation is indicated with 1-digit number such as X0 in the setting window No. 400 and 401 of FPWIN GR.

Ramco National www.PanasonicSensors.com 1-800-280-6933

FP-X Ry type

Item	Address	Name	Default value	Description
Controller input settings (HSC)	**402**	**High-speed counter settings (X0 to X7)**	CH0: Do not set input X0 as high-speed counter	Do not set input X0 as high-speed counter. Incremental input (X0) Decremental input (X0) Two-phase input (X0, X1)
			CH1: Do not set input X1 as high-speed counter	Do not set input X1 as high-speed counter. Incremental input (X1) Decremental input (X1) Two-phase input (X0, X1)
			CH2: Do not set input X2 as high-speed counter	Do not set input X2 as high-speed counter. Incremental input (X2) Decremental input (X2) Two-phase input (X2, X3)
			CH3: Do not set input X3 as high-speed counter	Do not set input X3 as high-speed counter. Incremental input (X3) Decremental input (X3) Two-phase input (X2, X3)
			CH4: Do not set input X4 as high-speed counter	Do not set input X4 as high-speed counter. Incremental input (X4) Decremental input (X4) Two-phase input (X3 X4)
			CH5: Do not set input X5 as high-speed counter	Do not set input X5 as high-speed counter. Incremental input (X5) Decremental input (X5) Two-phase input (X4, X5)
			CH6: Do not set input X6 as high-speed counter	Do not set input X6 as high-speed counter. Incremental input (X6) Decremental input (X6) Two-phase input (X5, X6)
			CH7: Do not set input X7 as high-speed counter	Do not set input X7 as high-speed counter. Incremental input (X7) Decremental input (X7) Two-phase input (X6, X7)
Interrupt/ pulse catch settings	**403**	**Pulse catch input settings**	Not set	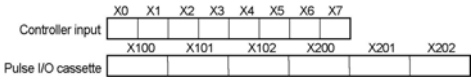 The pressed contact is set for the pulse catch input.
	404	**Interrupt input settings**	Not set	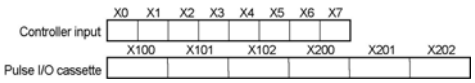 The pressed contact is set for the interrupt input.

Ramco National www.PanasonicSensors.com 1-800-280-6933

FP-X Ry type

Item	Add-ress	Name	Default value	Description
Inter-rupt edge settings	**405**	**Interrupt edge setting for controller input**	Leading edge	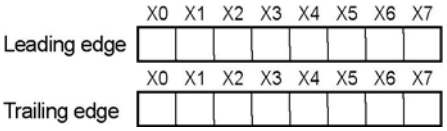 The pressed contact is up and set to trailing edge.
	406	**Interrupt edge setting for pulse I/O cassette**	Leading edge	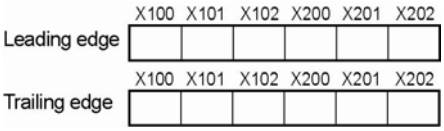 The pressed contact is up and set to trailing edge.

Note1) For counting two-phase input, only CH0, CH2, CH4 and CH6 can be used.
When two-phase input is specified for CH0, CH2, CH4 and CH6, the settings for CH1, CH3, CH5 and CH7 corresponding to each CH No. are ignored, however, specify the same setting for those channels.

Note2) The settings for pulse catch and interrupt input can only be specified in system registers 403 and 404.

Note3) If system register 400 to 404 have been set simultaneously for the same input relay, the following precedence order is effective: [High-speed counter]→[Pulse catch]→[Interrupt input].
<Example>
When the high-speed counter is being used in the addition input mode, even if input X0 is specified as an interrupt input or as pulse catch input, those settings are invalid, and X0 functions as counter input for the high-speed counter.

Note4) Upgrade FPWIN GR to Ver2.6 or higher version if the No. of I/O allocation is indicated with 1-digit number such as X0 in the setting window No. 403,404 and 406 of FPWIN GR.

Ramco National www.PanasonicSensors.com 1-800-280-6933

Item	Add-ress	Name	Default value	Description
Tool port set-ting	410	**Unit No. setting**	1	1 to 99
	412	**Communication mode setting**	Computer link	Computer link General-purpose communications
		Selection of modem connection	Disabled	Enabled/Disabled
	413	**Communication format setting**	Data length bit: 8 bits Parity check: “with odd” Stop bit: 1 bit	Enter the settings for the various items. - Data length bit: 7 bits/8 bits - Parity check: none/with odd/with even - Stop bit: 1 bit/2 bits - The following setting is valid only when the communication mode specified by system register 412 has been set to “General-purpose serial communication”. - Terminator: CR/CR+LF/None - Header: STX not exist/STX exist
	415	**Baud rate setting**	9600 bps	2400 bps 4800 bps 9600 bps 19200 bps 38400 bps 57600 bps 115200 bps
	420	**Starting address for received buffer of general (serial data) communication mode**	0	0 to 32764
	421	**Buffer capacity setting for data received of general (serial data) communication mode**	2048	0 to 2048

Ramco National www.PanasonicSensors.com 1-800-280-6933

FP-X

Item	Add-ress	Name	Default value	Description
COM. 1 port set-ting	410	**Unit No. setting**	1	1 to 99
	412	**Communication mode setting**	Computer link	Computer link General-purpose serial communication PC(PLC) link MODBUS RTU
		Selection of modem connection	Disabled	Enabled/Disabled
	413	**Communication format setting**	Data length bit: 8 bits Parity check: Odd Stop bit: 1 bit	Enter the settings for the various items. - Data length bit: 7 bits/8 bits - Parity check: none/with odd/with even - Stop bit: 1 bit/2 bits - The following setting is valid only when the communication mode specified by system register 412 has been set to “General-purpose serial communication”. - Terminator: CR/CR+LF/None - Header: STX not exist/STX exist
	415	**Baud rate setting**	9600 bps	2400 bps 4800 bps 9600 bps 19200 bps 38400 bps 57600 bps 115200 bps
	416	**Starting address for received buffer of general (serial data) communication mode**	0	0 to 32764
	417	**Buffer capacity setting for data received of general (serial data) communication mode**	2048	0 to 2048

Note1) The communication format in a PC(PLC) link is fixed at the following settings:
Data length is 8 bits, odd parity, stop bit is 1.
The communication speed (baud rate) is fixed at 115200 bps.

Note2) **Reference:** For information on MODBUS RTU mode operation, <MODBUS RUT Specifications>.

Ramco National www.PanasonicSensors.com 1-800-280-6933

FP-X

Item	Add-ress	Name	Default value	Description
COM. 2 port set-ting	411	**Unit No. setting**	1	1 to 99
	412	**Communication mode setting**	Computer link	Computer link General-purpose serial communication MODBUS RTU
		Selection of modem connection	Disabled	Enabled/Disabled
		Selection of port	Built-in USB	Built-in USB Communication cassette
	414	**Communication format setting**	Data length bit: 8 bits Parity check: “with odd” Stop bit: 1 bit	Enter the settings for the various items. - Data length bit: 7 bits/8 bits - Parity check: none/odd/even - Stop bit: 1 bit/2 bits - The following setting is valid only when the communication mode specified by system register 412 has been set to “General-purpose serial communication”. - Terminator: CR/CR+LF/None - Header: STX not exist/STX exist
	415	**Baud rate setting**	9600 bps	2400 bps 4800 bps 9600 bps 19200 bps 38400 bps 57600 bps 115200 bps
	416	**Starting address for received buffer of general (serial data) communication mode**	2048	0 to 32764
	417	**Buffer capacity setting for data received of general (serial data) communication mode**	2048	0 to 2048

Note1) The communication format in a PC(PLC) link is fixed at the following settings:
the data length is 8 bits, odd parity, stop bit is 1.
The communication speed (baud rate) is fixed at 115200 bps.

Note2) The USB port for C30 and C60 can be selected by the system register setting.
The USB port has been selected for the COM2 port of C30 and C60 as default setting. The USB port is 115.2 kbps despite of the baud rate setting No. 415.
The setting for No. 412 must be changed to communication cassette for using the COM2 port of the communication cassette.
The COM2 port of the USB port and the communication cassette cannot be used at the same time.

Ramco National www.PanasonicSensors.com 1-800-280-6933

FP-X

Item	Add-ress	Name	Default value	Description
Cont-roller input time cons-tant set-tings (Note1)	**430**	**Controller input time constant setting 1 X0 to X3**	None	None 1 ms 2 ms 4 ms 8 ms 16 ms 32 ms 64 ms 128 ms 156 ms
	431	**Controller input time constant setting 1 X4 to X7**		
	432	**Controller input time constant setting 2 X8 to XB**		
	433	**Controller input time constant setting 2 XC to XF**		
	434	**Controller input time constant setting 3 X10 to X13**		
	435	**Controller input time constant setting 3 X14 to X17**		
	436	**Controller input time constant setting 4 X18 to X1B**		
	437	**Controller input time constant setting 4 X1C to X1F**		

Note1) These settings are available for the FP-X V2.0 or later.

Ramco National www.PanasonicSensors.com 1-800-280-6933

17.1.2 Table of Special Internal Relays for FP-X

The special internal relays turn on and off under special conditions. The on and off states are not output externally. Writing is not possible with a programming tool or an instruction.

WR900 FP-X

Address	Name	Description
R9000	**Self-diagnostic error flag**	Turns on when a self-diagnostic error occurs. ⇒ The content of self-diagnostic error is stored in DT90000.
R9001	**Not used**	-
R9002	**Application cassette I/O error flag**	Turns on when an error is detected in the I/O type application cassette.
R9003	**Application cassette abnormal error flag**	Turns on when an error is detected in the application cassette.
R9004	**I/O verification error flag**	Turns on when an I/O verification error occurs.
R9005	**Backup battery error flag (non-hold)**	Turns on when a backup battery error occurs. Turns on when the battery has run out even if the system register No. 4 has been set not to inform the battery error.
R9006	**Backup battery error flag (hold)**	Turns on when a backup battery error occurs. Turns on when the battery has run out even if the system register No. 4 has been set not to inform the battery error. Once a battery error has been detected, this is held even after recovery has been made. ⇒It goes off if the power supply is turned off, or if the system is initialized.
R9007	**Operation error flag (hold)**	Turns on and keeps the on state when an operation error occurs. ⇒The address where the error occurred is stored in DT90017. (indicates the first operation error which occurred).
R9008	**Operation error flag (non-hold)**	Turns on for an instant when an operation error occurs. ⇒The address where the operation error occurred is stored in DT90018. The contents change each time a new error occurs.
R9009	**Carry flag**	This is set if an overflow or underflow occurs in the calculation results, and as a result of a shift system instruction being executed.
R900A	**> Flag**	Turns on for an instant when the compared results become larger in the comparison instructions.
R900B	**= Flag**	Turns on for an instant, - when the compared results are equal in the comparison instructions. - when the calculated results become 0 in the arithmetic instructions.
R900C	**< Flag**	Turns on for an instant when the compared results become smaller in the comparison instructions.
R900D	**Auxiliary timer Contact**	Turns on when the set time elapses (set value reaches 0) in the timing operation of the F137(STMR)/F183(DSTM) auxiliary timer instruction. The flag turns off when the trigger for auxiliary timer instruction turns off.
R900E	**Tool port communication error**	Turns on when communication error at tool port is occurred.
R900F	**Constant scan error flag**	Turns on when scan time exceeds the time specified in system register 34 during constant scan execution. This goes on if 0 has been set using system register 34.

Ramco National www.PanasonicSensors.com 1-800-280-6933

WR901 FP-X

Address	Name	Description
R9010	**Always on relay**	Always on.
R9011	**Always off relay**	Always off.
R9012	**Scan pulse relay**	Turns on and off alternately at each scan.
R9013	**Initial (on type) pulse relay**	Goes on for only the first scan after operation (RUN) has been started, and goes off for the second and subsequent scans.
R9014	**Initial (off type) pulse relay**	Goes off for only the first scan after operation (RUN) has been started, and goes on for the second and subsequent scans.
R9015	**Step ladder initial pulse relay (on type)**	Turns on for only the first scan of a process after the boot at the step ladder control.
R9016	**Not used**	-
R9017	**Not used**	-
R9018	**0.01 s clock pulse relay**	Repeats on/off operations in 0.01 sec. cycles. 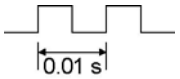
R9019	**0.02 s clock pulse relay**	Repeats on/off operations in 0.02 s. cycles. 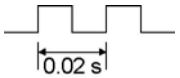
R901A	**0.1 s clock pulse relay**	Repeats on/off operations in 0.1 s. cycles. 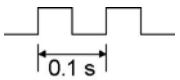
R901B	**0.2 s clock pulse relay**	Repeats on/off operations in 0.2 s. cycles. 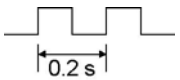
R901C	**1 s clock pulse relay**	Repeats on/off operations in 1 s. cycles. 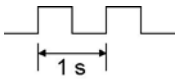
R901D	**2 s clock pulse relay**	Repeats on/off operations in 2 s. cycles. 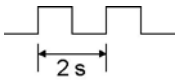
R901E	**1 min clock pulse relay**	Repeats on/off operations in 1 min. cycles. 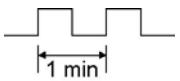
R901F	**Not used**	-

Ramco National www.PanasonicSensors.com 1-800-280-6933

WR902 FP-X

Address	Name	Description
R9020	**RUN mode flag**	Turns off while the mode selector is set to PROG. Turns on while the mode selector is set to RUN.
R9021	**Not used**	-
R9022	**Not used**	-
R9023	**Not used**	-
R9024	**Not used**	-
R9025	**Not used**	-
R9026	**Message flag**	Turns on while the F149 (MSG) instruction is executed.
R9027	**Not used**	-
R9028	**Not used**	-
R9029	**Forcing flag**	Turns on during forced on/off operation for input/output relay timer/counter contacts.
R902A	**Interrupt enable flag**	Turns on while the external interrupt trigger is enabled by the ICTL instruction.
R902B	**Interrupt error flag**	Turns on when an interrupt error occurs.
R902C	**Sample point flag**	Sampling by the instruction=0 Sampling at constant time intervals=1
R902D	**Sample trace end flag**	When the sampling operation stops=1, When the sampling operation starts=0
R902E	**Sampling stop trigger flag**	When the sampling stop trigger activates=1 When the sampling stop trigger stops=0
R902F	**Sampling enable flag**	When sampling starts=1 When sampling stops=0

Ramco National www.PanasonicSensors.com 1-800-280-6933

WR903 FP-X

Address	Name	Description
R9030	**Not used**	-
R9031	**Not used**	-
R9032	**COM1 port mode flag**	- Turns on when the general-purpose communication function is being used - Goes off when any function other than the general-purpose communication function is being used.
R9033	**PR instruction flag**	Off: Printing is not executed. On: Execution is in progress.
R9034	**Editing in RUN mode flag**	Goes on for ony the first scan following completion of a rewrite during the RUN operation.
R9035	**Not used**	-
R9036	**Not used**	-
R9037	**COM1 port communication error flag**	- Goes on if a transmission error occurs during data communication. - Goes off when a request is made to send data, using the F159 (MTRN) instruction.
R9038	**COM1 port reception done flag during general- purpose serial communication**	- Turns on when the terminator is received during general - purpose serial communication.
R9039	**COM1 port transmission done flag during general-purpose serial communication**	- Goes on when transmission has been completed in general-purpose serial communication. - Goes off when transmission is requested in general-purpose serial communication.
R903A	**Not used**	-
R903B	**Not used**	-
R903C	**Not used**	-
R903D	**Not used**	-
R903E	**TOOL port reception done flag during general purpose communication**	- Turns on when the terminator is received during general - purpose serial communication.
R903F	**TOOL port transmission done flag during general-purpose serial communication**	- Goes on when transmission has been completed in general-purpose serial communication. - Goes off when transmission is requested in general-purpose serial communication.

Note) R9030 to R903F can be changed during 1 scan.

Ramco National www.PanasonicSensors.com 1-800-280-6933

WR904 FP-X

Address	Name	Description
R9040	**TOOL port mode flag**	- Goes on when the general-purpose serial communication is used. - Goes off when the MEWTOCOL is used.
R9041	**COM1 port PC(PLC) link flag**	Turn on while the PC(PLC) link function is used.
R9042	**COM2 port mode flag**	- Goes on when the general-purpose serial communication is used. - Goes off when the MEWTOCOL is used.
R9043	**Not used**	-
R9044	**COM1 port SEND/RECV instruction execution flag**	Monitors whether the F145 (SEND) or F146 (RECV) instructions can be executed or not for the COM1 port. Off: None of the above mentioned instructions can be executed. (During executing the instruction) On: One of the above mentioned instructions can be executed.
R9045	**COM1 port SEND/RECV instruction execution end flag**	Monitors if an abnormality has been detected during the execution of the F145 (SEND) or F146 (RECV) instructions for the COM1 port as follows: Off: No abonormality detected. On: An abnormality detected. (communication error) The error code is stored in DT90124.
R9046	**Not used**	-
R9047	**COM2 port communication error flag**	- Goes on if a transmission error occurs during data communication. - Goes off when a request is made to send data, using the F159 (MTRN) instruction.
R9048	**COM2 port reception done flag during general-purpose communicating**	- Turn on when the terminator is received during general-purpose serial communication.
R9049	**COM2 port transmission done flag during general-purpose communication**	- Goes on when transmission has been completed in general-purpose serial communication. - Goes off when transmission is requested in general-purpose communication.
R904A	**COM2 port SEND/RECV instruction execution flag**	Monitors whether the F145 (SEND) or F146 (RECV) instructions can be executed or not for the COM2 port. Off: None of the above mentioned instructions can be executed. (During executing the instruction) On: One of the above mentioned instructions can be executed.
R904B	**COM2 port SEND/RECV instruction execution end flag**	Monitors if an abnormality has been detected during the execution of the F145 (SEND) or F146 (RECV) instructions for the COM2 port as follows: Off: No abonormality detected. On: An abnormality detected. (communication error) The error code is stored in DT90125.
R904C to R904F	**Not used**	-

Note) R9040 to R904F can be changed during 1 scan.

Ramco National www.PanasonicSensors.com 1-800-280-6933

WR905 FP-X

Address	Name	Description
R9050	**MEWNET-W0 PC(PLC) link transmission error flag**	When using MEWNET-W0 - Turns on when a transmission error occurs at PC(PLC) link. - Turns on when there is an error in the PC(PLC) link area settings.
R9051 to R905F	**Not used**	

Ramco National www.PanasonicSensors.com 1-800-280-6933

WR906 FP-X

Address	Name		Description
R9060	**MEWNET-W0 PC(PLC) link 0 transmission assurance relay**	**Unit No.1**	Turns on when Unit No. 1 is communicating properly in PC(PLC) link mode. Turns off when operation is stopped, when an error occurs, or when not in the PC(PLC) link mode.
R9061		**Unit No.2**	Turns on when Unit No. 2 is communicating properly in PC(PLC) link mode. Turns off when operation is stopped, when an error occurs, or when not in the PC(PLC) link mode.
R9062		**Unit No.3**	Turns on when Unit No. 3 is communicating properly in PC(PLC) link mode. Turns off when operation is stopped, when an error occurs, or when not in the PC(PLC) link mode.
R9063		**Unit No.4**	Turns on when Unit No. 4 is communicating properly in PC(PLC) link mode. Turns off when operation is stopped, when an error occurs, or when not in the PC(PLC) link mode.
R9064		**Unit No.5**	Turns on when Unit No. 5 is communicating properly in PC(PLC) link mode. Turns off when operation is stopped, when an error occurs, or when not in the PC(PLC) link mode.
R9065		**Unit No.6**	Turns on when Unit No. 6 is communicating properly in PLC link mode. Turns off when operation is stopped, when an error occurs, or when not in the PLC link mode.
R9066		**Unit No.7**	Turns on when Unit No. 7 is communicating properly in PC(PLC) link mode. Turns off when operation is stopped, when an error occurs, or when not in the PC(PLC) link mode.
R9067		**Unit No.8**	Turns on when Unit No. 8 is communicating properly in PC(PLC) link mode. Turns off when operation is stopped, when an error occurs, or when not in the PC(PLC) link mode.
R9068		**Unit No.9**	Turns on when Unit No. 9 is communicating properly in PC(PLC) link mode. Turns off when operation is stopped, when an error occurs, or when not in the PC(PLC) link mode.
R9069		**Unit No.10**	Turns on when Unit No. 10 is communicating properly in PC(PLC) link mode. Turns off when operation is stopped, when an error occurs, or when not in the PC(PLC) link mode.
R906A		**Unit No.11**	Turns on when Unit No. 11 is communicating properly in PC(PLC) link mode. Turns off when operation is stopped, when an error occurs, or when not in the PC(PLC) link mode.
R906B		**Unit No.12**	Turns on when Unit No. 12 is communicating properly in PC(PLC) link mode. Turns off when operation is stopped, when an error occurs, or when not in the PC(PLC) link mode.
R906C		**Unit No.13**	Turns on when Unit No. 13 is communicating properly in PC(PLC) link mode. Turns off when operation is stopped, when an error occurs, or when not in the PC(PLC) link mode.
R906D		**Unit No.14**	Turns on when Unit No. 14 is communicating properly in PC(PLC) link mode. Turns off when operation is stopped, when an error occurs, or when not in the PC(PLC) link mode.
R906E		**Unit No.15**	Turns on when Unit No. 15 is communicating properly in PC(PLC) link mode. Turns off when operation is stopped, when an error occurs, or when not in the PC(PLC) link mode.
R906F		**Unit No.16**	Turns on when Unit No. 16 is communicating properly in PC(PLC) link mode. Turns off when operation is stopped, when an error occurs, or when not in the PC(PLC) link mode.

Ramco National www.PanasonicSensors.com 1-800-280-6933

WR907 FP-X

Address	Name		Description
R9070	**MEWNET-W0 PC(PLC) link 0 operation mode relay**	**Unit No.1**	Turns on when Unit No. 1 is in the RUN mode. Turns off when Unit No. 1 is in the PROG. mode.
R9071		**Unit No.2**	Turns on when Unit No. 2 is in the RUN mode. Turns off when Unit No. 2 is in the PROG. mode.
R9072		**Unit No.3**	Turns on when Unit No. 3 is in the RUN mode. Turns off when Unit No. 3 is in the PROG. mode.
R9073		**Unit No.4**	Turns on when Unit No. 4 is in the RUN mode. Turns off when Unit No. 4 is in the PROG. mode.
R9074		**Unit No.5**	Turns on when Unit No. 5 is in the RUN mode. Turns off when Unit No. 5 is in the PROG. mode.
R9075		**Unit No.6**	Turns on when Unit No. 6 is in the RUN mode. Turns off when Unit No. 6 is in the PROG. mode.
R9076		**Unit No.7**	Turns on when Unit No. 7 is in the RUN mode. Turns off when Unit No. 7 is in the PROG. mode.
R9077		**Unit No.8**	Turns on when Unit No. 8 is in the RUN mode. Turns off when Unit No. 8 is in the PROG. mode.
R9078		**Unit No.9**	Turns on when Unit No. 9 is in the RUN mode. Turns off when Unit No. 9 is in the PROG. mode.
R9079		**Unit No.10**	Turns on when Unit No. 10 is in the RUN mode. Turns off when Unit No. 10 is in the PROG. mode.
R907A		**Unit No.11**	Turns on when Unit No. 11 is in the RUN mode. Turns off when Unit No. 11 is in the PROG. mode.
R907B		**Unit No.12**	Turns on when Unit No. 12 is in the RUN mode. Turns off when Unit No. 12 is in the PROG. mode.
R907C		**Unit No.13**	Turns on when Unit No. 13 is in the RUN mode. Turns off when Unit No. 13 is in the PROG. mode.
R907D		**Unit No.14**	Turns on when Unit No. 14 is in the RUN mode. Turns off when Unit No. 14 is in the PROG. mode.
R907E		**Unit No.15**	Turns on when Unit No. 15 is in the RUN mode. Turns off when Unit No. 15 is in the PROG. mode.
R907F		**Unit No.16**	Turns on when Unit No. 16 is in the RUN mode. Turns off when Unit No. 16 is in the PROG. mode.

Ramco National www.PanasonicSensors.com 1-800-280-6933

WR908 FP-X

Address	Name		Description
R9080	**MEWNET-W0 PC(PLC) link 1 transmission assurance relay**	**Unit No.1**	Turns on when Unit No. 1 is communicating properly in PC(PLC) link mode. Turns off when operation is stopped, when an error occurs, or when not in the PC(PLC) link mode.
R9081		**Unit No.2**	Turns on when Unit No. 2 is communicating properly in PC(PLC) link mode. Turns off when operation is stopped, when an error occurs, or when not in the PC(PLC) link mode.
R9082		**Unit No.3**	Turns on when Unit No. 3 is communicating properly in PC(PLC) link mode. Turns off when operation is stopped, when an error occurs, or when not in the PC(PLC) link mode.
R9083		**Unit No.4**	Turns on when Unit No. 4 is communicating properly in PC(PLC) link mode. Turns off when operation is stopped, when an error occurs, or when not in the PC(PLC) link mode.
R9084		**Unit No.5**	Turns on when Unit No. 5 is communicating properly in PC(PLC) link mode. Turns off when operation is stopped, when an error occurs, or when not in the PC(PLC) link mode.
R9085		**Unit No.6**	Turns on when Unit No. 6 is communicating properly in PLC link mode. Turns off when operation is stopped, when an error occurs, or when not in the PLC link mode.
R9086		**Unit No.7**	Turns on when Unit No. 7 is communicating properly in PC(PLC) link mode. Turns off when operation is stopped, when an error occurs, or when not in the PC(PLC) link mode.
R9087		**Unit No.8**	Turns on when Unit No. 8 is communicating properly in PC(PLC) link mode. Turns off when operation is stopped, when an error occurs, or when not in the PC(PLC) link mode.
R9088		**Unit No.9**	Turns on when Unit No. 9 is communicating properly in PC(PLC) link mode. Turns off when operation is stopped, when an error occurs, or when not in the PC(PLC) link mode.
R9089		**Unit No.10**	Turns on when Unit No. 10 is communicating properly in PC(PLC) link mode. Turns off when operation is stopped, when an error occurs, or when not in the PC(PLC) link mode.
R908A		**Unit No.11**	Turns on when Unit No. 11 is communicating properly in PC(PLC) link mode. Turns off when operation is stopped, when an error occurs, or when not in the PC(PLC) link mode.
R908B		**Unit No.12**	Turns on when Unit No. 12 is communicating properly in PC(PLC) link mode. Turns off when operation is stopped, when an error occurs, or when not in the PC(PLC) link mode.
R908C		**Unit No.13**	Turns on when Unit No. 13 is communicating properly in PC(PLC) link mode. Turns off when operation is stopped, when an error occurs, or when not in the PC(PLC) link mode.
R908D		**Unit No.14**	Turns on when Unit No. 14 is communicating properly in PC(PLC) link mode. Turns off when operation is stopped, when an error occurs, or when not in the PC(PLC) link mode.
R908E		**Unit No.15**	Turns on when Unit No. 15 is communicating properly in PC(PLC) link mode. Turns off when operation is stopped, when an error occurs, or when not in the PC(PLC) link mode.
R908F		**Unit No.16**	Turns on when Unit No. 16 is communicating properly in PC(PLC) link mode. Turns off when operation is stopped, when an error occurs, or when not in the PC(PLC) link mode.

Ramco National www.PanasonicSensors.com 1-800-280-6933

WR909 FP-X

Address	Name		Description
R9090	**MEWNET-W0 PC(PLC) link 1 operation mode relay**	**Unit No.1**	Turns on when Unit No. 1 is in the RUN mode. Turns off when Unit No. 1 is in the PROG. mode.
R9091		**Unit No.2**	Turns on when Unit No. 2 is in the RUN mode. Turns off when Unit No. 2 is in the PROG. mode.
R9092		**Unit No.3**	Turns on when Unit No. 3 is in the RUN mode. Turns off when Unit No. 3 is in the PROG. mode.
R9093		**Unit No.4**	Turns on when Unit No. 4 is in the RUN mode. Turns off when Unit No. 4 is in the PROG. mode.
R9094		**Unit No.5**	Turns on when Unit No. 5 is in the RUN mode. Turns off when Unit No. 5 is in the PROG. mode.
R9095		**Unit No.6**	Turns on when Unit No. 6 is in the RUN mode. Turns off when Unit No. 6 is in the PROG. mode.
R9096		**Unit No.7**	Turns on when Unit No. 7 is in the RUN mode. Turns off when Unit No. 7 is in the PROG. mode.
R9097		**Unit No.8**	Turns on when Unit No. 8 is in the RUN mode. Turns off when Unit No. 8 is in the PROG. mode.
R9098		**Unit No.9**	Turns on when Unit No. 9 is in the RUN mode. Turns off when Unit No. 9 is in the PROG. mode.
R9099		**Unit No.10**	Turns on when Unit No. 10 is in the RUN mode. Turns off when Unit No. 10 is in the PROG. mode.
R909A		**Unit No.11**	Turns on when Unit No. 11 is in the RUN mode. Turns off when Unit No. 11 is in the PROG. mode.
R909B		**Unit No.12**	Turns on when Unit No. 12 is in the RUN mode. Turns off when Unit No. 12 is in the PROG. mode.
R909C		**Unit No.13**	Turns on when Unit No. 13 is in the RUN mode. Turns off when Unit No. 13 is in the PROG. mode.
R909D		**Unit No.14**	Turns on when Unit No. 14 is in the RUN mode. Turns off when Unit No. 14 is in the PROG. mode.
R909E		**Unit No.15**	Turns on when Unit No. 15 is in the RUN mode. Turns off when Unit No. 15 is in the PROG. mode.
R909F		**Unit No.16**	Turns on when Unit No. 16 is in the RUN mode. Turns off when Unit No. 16 is in the PROG. mode.

Ramco National www.PanasonicSensors.com 1-800-280-6933

WR910 FP-X

Address	Name		Description
R9100 to R910F	Not used		-
R9110	Control flag	HSC-CH0	- Turns on while the F166 (HC1S) and F167 (HC1R) instructions are executed. - Turns off when the F166 (HC1S) and F167 (HC1R) instructions are completed.
R9111		HSC-CH1	
R9112		HSC-CH2	
R9113		HSC-CH3	
R9114		HSC-CH4	
R9115		HSC-CH5	
R9116		HSC-CH6	
R9117		HSC-CH7	
R9118		HSC-CH8 Note1)	
R9119		HSC-CH9 Note1)	
R911A		HSC-CHA Note1)	
R911B		HSC-CHB Note1)	
R911C		PLS-CH0	- Turns on while the pulses are being output by the F171 (SPDH), F172 (PLSH), F173 (PWMH), F174 (SP0H) and F175 (SPSH) instructions.
R911D		PLS-CH1	
R911E		PLS-CH2 Note2)	
R911F		PLS-CH3 Note2)	

Note1) This relay is avaialble for the FP-X Ry type only.
Note2) This relay is available for the FP-X Tr type only.

Ramco National www.PanasonicSensors.com 1-800-280-6933

17.1.3 Table of Special Data Registers for FP-X

FP-X (A: Available, N/A: Not available)

Address	Name	Description	Read-ing	Writ-ing
DT90000	**Self-diagnostic error code**	The self-diagnostic error code is stored here when a self-diagnostic error occurs.	A	N/A
DT90001	**Not used**	-	N/A	N/A
DT90002	**Position of abnormal I/O board for application cassette**	When an error occurs at the I/O board for the application cassette, the bit corresponding to the board will be set on. 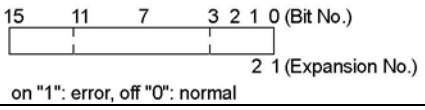 on "1": error, off "0": normal	A	N/A
DT90003	**Not used**	-	N/A	N/A
DT90004	**Not used**	-	N/A	N/A
DT90005	**Not used**	-	N/A	N/A
DT90006	**Position of abnormal application cassette**	When an error occurs at the intelligent board for the application cassette, the bit corresponding to the board will be set on. 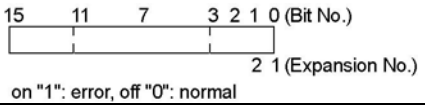 on "1": error, off "0": normal	A	N/A
DT90007	**Not used**	-	N/A	N/A
DT90008	**Not used**	-	N/A	N/A
DT90009	**Communication error flag for COM2**	Stores the error contents when using COM2 port.	A	N/A
DT90010	**Extension I/O verify error unit**	When the state of installation of FP-X expansion I/O unit has changed since the power was turned on, the bit corresponding to the unit No. will turn on. Monitor using binary display. 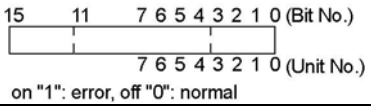 on "1": error, off "0": normal	A	N/A

Ramco National www.PanasonicSensors.com 1-800-280-6933

FP-X (A: Available, N/A: Not available)

Address	Name	Description	Read-ing	Writ-ing
DT90011	**Add-on cassette verify error unit**	When the state of installation of an FP-X add-on cassette has changed since the power was turned on, the bit corresponding to the unit No. will turn on. Monitor using binary display. 15 11 7 3 2 1 0 (Bit No.) 2 1 (Expansion No.) on "1": error, off "0": normal	A	N/A
DT90012	**Not used**	-	N/A	N/A
DT90013	**Not used**	-	N/A	N/A
DT90014	**Operation auxiliary register for data shift instruction**	One shift-out hexadecimal digit is stored in bit positions 0 to 3 when the data shift instruction, F105 (BSR) or F106 (BSL) is executed. The value can be read and written by executing F0 (MV) instruction.	A	A
DT90015	**Operation auxiliary register for division instruction**	The divided remainder (16-bit) is stored in DT90015 when the division instruction F32(%) or F52(B%) instruction is executed. The divided remainder (32-bit) is stored in DT90015 and DT90016 when the division instruction F33(D%) or F53(DB%) is executed. The value can be read and written by executing F0(MV) instruction.	A	A
DT90016			A	A
DT90017	**Operation error address (hold type)**	After commencing operation, the address where the first operation error occurred is stored. Monitor the address using decimal display.	A	N/A
DT90018	**Operation error address (non-hold type)**	The address where an operation error occurred is stored. Each time an error occurs, the new address overwrites the previous address. At the beginning of a scan, the address is 0. Monitor the address using decimal display.	A	N/A
DT90019	**2.5 ms ring counter** Note1)	The data stored here is increased by one every 2.5 ms. (H0 to HFFFF) Difference between the values of the two points (absolute value) x 2.5 ms = Elapsed time between the two points.	A	N/A
DT90020	**10 μs ring counter** Note1) Note2)	The data stored here is increased by one every 10.24 μs. (H0 to HFFFF) Difference between the values of the two points (absolute value) x 10.24 μs = Elapsed time between the two points. Note) The exact value is 10.24 μs.	A	N/A
DT90021	**Not used**	-	N/A	N/A

Note1) It is renewed once at the beginning of each one scan.

Note2) As DT90020 is renewed even if F0(MV), DT90020 and D instruction is being executed, it can be used to measure the block time.

Ramco National www.PanasonicSensors.com 1-800-280-6933

FP-X (A: Available, N/A: Not available)

Address	Name	Description	Read-ing	Writ-ing
DT90022	**Scan time (current value)** Note)	The current scan time is stored here. Scan time is calculated using the formula: Scan time (ms) = stored data (decimal) x 0.1 ms Example: K50 indicates 5 ms.	A	N/A
DT90023	**Scan time (minimum value)** Note)	The minimum scan time is stored here. Scan time is calculated using the formula: Scan time (ms) = stored data (decimal) x 0.1 ms Example: K50 indicates 5 ms.	A	N/A
DT90024	**Scan time (maximum value)** Note)	The maximum scan time is stored here. The scan time is calculated using the formula: Scan time (ms) = stored data (decimal) x 0.1 ms Example: K125 indicates 12.5 ms.	A	N/A
DT90025	**Mask condition monitoring register for interrupts (INT0 to 13)**	The mask conditions of interrupts using the instruction can be stored here. Monitor using binary display. 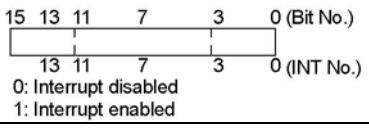 0: Interrupt disabled 1: Interrupt enabled	A	N/A
DT90026	**Not used**	-	N/A	N/A
DT90027	**Periodical interrupt interval (INT24)**	The value set by ICTL instruction is stored. K0: periodical interrupt is not used. K1 to K3000: 0.5ms to 1.5s or 10ms to 30s	A	N/A
DT90028	**Sample trace interval**	K0: Sampling by the SMPL instruction K1 to K3000 (x 10 ms): 10 ms to 30 s	A	N/A
DT90029	**Not used**	-	N/A	N/A
DT90030	**Message 0**	The contents of the specified message (Data length) are stored in these special data registers when F149 (MSG) instruction is executed.	A	N/A
DT90031	**Message 1**			
DT90032	**Message 2**			
DT90033	**Message 3**			
DT90034	**Message 4**			
DT90035	**Message 5**			
DT90036	**Not used**	-	N/A	N/A

Note) Scan time display is only possible in RUN mode, and shows the operation cycle time. (In PROG. mode, the scan time for the operation is not displayed.) The maximum and minimum values are cleared each time the mode is switched from RUN to PROG.

Ramco National www.PanasonicSensors.com 1-800-280-6933

FP-X (A: Available, N/A: Not available)

Address	Name	Description	Read-ing	Writ-ing
DT90037	**Work1 for SRC instructions**	The number of data that match the searched data is stored here when F96 (SRC) insturction is executed.	A	N/A
DT90038	**Work2 for SRC instructions**	The position of the first matching data is stored here when an F96 (SRC) instruction is executed.	A	N/A
DT90039	**Not used**	-	N/A	N/A
DT90040	**Volume input 0**	The potentiometer value (K0 to K1000) is stored here. This value can be used in analog timers and other applications by using the program to read this value to a data register. V0→DT90040 V1→DT90041	A	N/A
DT90041	**Volume input 1**			
DT90042	**Volume input 2**	For C60 only: The potentiometer value (K0 to K1000) is stored here. This value can be used in analog timers and other applications by using the program to read this value to a data register. V2→DT90042 V3→DT90043	A	N/A
DT90043	**Volume input 3**			
DT90044	**System work**	Used by the system.	A	A
DT90045	**Not used**	-	N/A	N/A
DT90046	**Not used**	-	N/A	N/A
DT90047	**Not used**	-	N/A	N/A
DT90048	**Not used**	-	N/A	N/A
DT90049	**Not used**	-	N/A	N/A
DT90050	**Not used**	-	N/A	N/A
DT90051	**Not used**	-	N/A	N/A

Ramco National www.PanasonicSensors.com 1-800-280-6933

Address	Name	Description	Read-ing	Writ-ing
DT90052	**High-speed counter control flag**	A value can be written with F0 (MV) instruction to reset the high-speed counter, disable counting, continue or clear high-speed counter instruction. Control code setting 【FP-X Ry type】 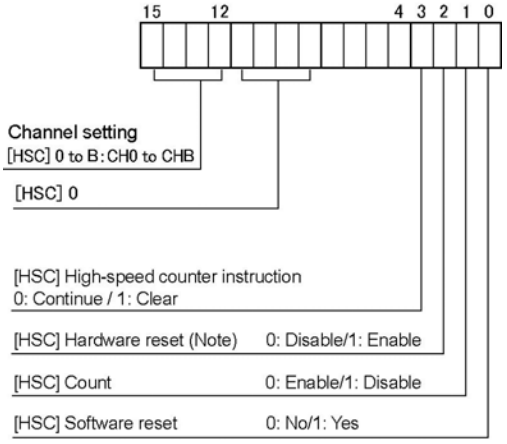 【FP-X Tr type】 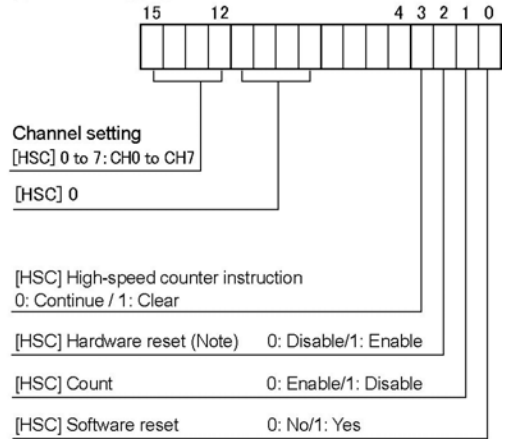 	N/A	A

Ramco National www.PanasonicSensors.com 1-800-280-6933

FP-X (A: Available, N/A: Not available)

Address	Name	Description	Read-ing	Writ-ing
DT90052	**Pulse output control flag**	A value can be written with F0 (MV) instruction to reset the high-speed counter, disable counting, continue or clear high-speed counter instruction. Control code setting 【FP-X Ry type】 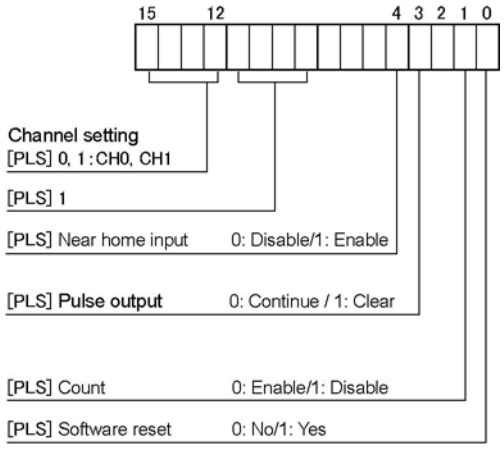 【FP-X Tr type】 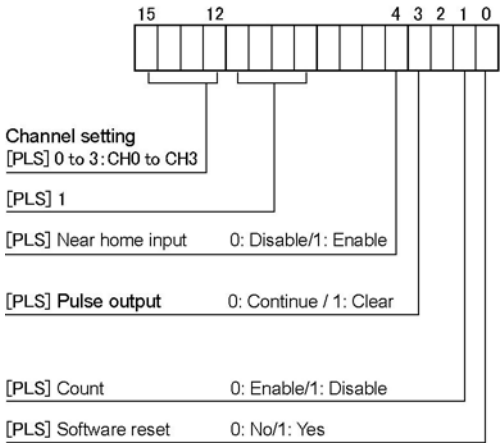 	N/A	A

Ramco National www.PanasonicSensors.com 1-800-280-6933

FP-X (A: Available, N/A: Not available)

<table>
<tr><th>Address</th><th>Name</th><th>Description</th><th>Read-ing</th><th>Writ-ing</th></tr>
<tr><td>DT90053</td><td>Real-Time Clock monitor (hour/minute)</td><td>Hour and minute data of the Real-Time Clock are stored here. This data is read-only data. It cannot be overwritten.
 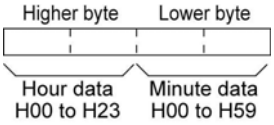
</td><td>A</td><td>N/A</td></tr>
<tr><td>DT90054</td><td>Real-Time Clock setting (minute/second)</td><td rowspan="4">The year, month, day, hour, minute, second and day-of-the-week data for the Real-Time Clock is stored. The built-in Real-Time Clock will operate correctly through the year 2099 and supports leap years. The Real-Time Clock can be set by writing a value using a programming tool software or a program that uses the F0 (MV) instruction.(see example for DT90058)
 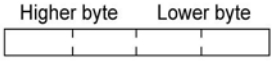

<table>
<tr><td>DT90054</td><td>Minute data (H00 to H59)</td><td>Second data (H00 to H59)</td></tr>
<tr><td>DT90055</td><td>Day data (H01 to H31)</td><td>Hour data (H00 to H23)</td></tr>
<tr><td>DT90056</td><td>Year data (H00 to H99)</td><td>Month data (H01 to H12)</td></tr>
<tr><td>DT90057</td><td>—</td><td>Day-of-the-week (H00 to H06)</td></tr>
</table>
As a day of the week is not automatially set on FPWIN GR, fix what day is set to 00, and set each value for 00 to 06.</td><td rowspan="4">A</td><td rowspan="4">A</td></tr>
<tr><td>DT90055</td><td>Real-Time Clock setting (day/hour)</td></tr>
<tr><td>DT90056</td><td>Real-Time Clock setting (year/month)</td></tr>
<tr><td>DT90057</td><td>Real-Time Clock setting (day-of-the-week)</td></tr>
</table>

Ramco National www.PanasonicSensors.com 1-800-280-6933

FP-X (A: Available, N/A: Not available)

Address	Name	Description	Read-ing	Writ-ing
DT90058	**Real-Time Clock time setting and 30 seconds correction register**	The Real-Time Clock is adjusted as follows. **When setting the Real-Time Clock by program** By setting the highest bit of DT90058 to 1, the time becomes that written to DT90054 to DT90057 by F0 (MV) instruction. After the time is set, DT90058 is cleared to 0. (Cannot be performed with any instruction other than F0 (MV) instruction.) <Example> Set the time to 12:00:00 on the 5th day when the X0 turns on. 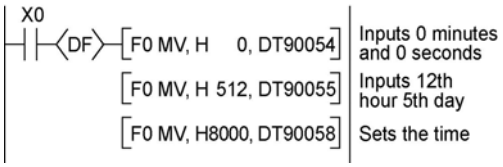 Note) If the values of DT90054 to DT90057 are changed with the programming tool software, the time will be set when the new values are written. Therefore, it is unnecessary to write to DT90058. **When the correcting times less than 30 seconds** By setting the lowest bit of DT90058 to 1, the value will be moved up or down and become exactly 0 seconds. After the correction is completed, DT90058 is cleared to 0. Example: Correct to 0 seconds with X0: on At the time of coorection, if between 0 and 29 seconds, it will be moved down, and if between 30 and 59 seconds, it will be moved up. In the example above, if the time was 5 minutes 29 seconds, it will become 5 minutes 0 seconds;and, if the time was 5 minutes 35 seconds, it will become 6 minutes 0 seconds.	A	A
DT90059	**Communication error code**	Error code is sotred here when a communication error occurs.	N/A	N/A

Ramco National www.PanasonicSensors.com 1-800-280-6933

Address	Name	Description	Read-ing	Writ-ing
DT90060	Step ladder process (0 to 15)	Indicates the startup condition of the step ladder process. When the process starts up, the bit corresponding to the process number turns on. Monitor using binary display. <Example> 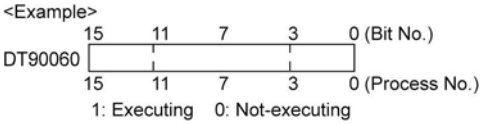 A programming tool software can be used to write data.	A	A
DT90061	Step ladder process (16 to 31)			
DT90062	Step ladder process (32 to 47)			
DT90063	Step ladder process (48 to 63)			
DT90064	Step ladder process (64 to 79)			
DT90065	Step ladder process (80 to 95)			
DT90066	Step ladder process (96 to 111)			
DT90067	Step ladder process (112 to 127)			
DT90068	Step ladder process (128 to 143)			
DT90069	Step ladder process (144 to 159)			
DT90070	Step ladder process (160 to 175)			
DT90071	Step ladder process (176 to 191)			
DT90072	Step ladder process (192 to 207)			
DT90073	Step ladder process (208 to 223)			
DT90074	Step ladder process (224 to 239)			
DT90075	Step ladder process (240 to 255)			
DT90076	Step ladder process (256 to 271)			
DT90077	Step ladder process (272 to 287)			
DT90078	Step ladder process (288 to 303)			
DT90079	Step ladder process (304 to 319)			
DT90080	Step ladder process (320 to 335)			
DT90081	Step ladder process (336 to 351)			

Ramco National www.PanasonicSensors.com 1-800-280-6933

FP-X (A: Available, N/A: Not available)

Address	Name	Description	Read-ing	Writ-ing
DT90082	Step ladder process (352 to 367)	Indicates the startup condition of the step ladder process. When the process starts up, the bit corresponding to the process number turns on . Monitor using binary display. <Example> 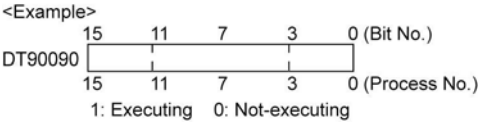 A programming tool software can be used to write data.	A	A
DT90083	Step ladder process (368 to 383)			
DT90084	Step ladder process (384 to 399)			
DT90085	Step ladder process (400 to 415)			
DT90086	Step ladder process (416 to 431)			
DT90087	Step ladder process (432 to 447)			
DT90088	Step ladder process (448 to 463)			
DT90089	Step ladder process (464 to 479)			
DT90090	Step ladder process (480 to 495)			
DT90091	Step ladder process (496 to 511)			
DT90092	Step ladder process (512 to 527)			
DT90093	Step ladder process (528 to 543)			
DT90094	Step ladder process (544 to 559)			
DT90095	Step ladder process (560 to 575)			
DT90096	Step ladder process (576 to 591)			
DT90097	Step ladder process (592 to 607)			

Ramco National www.PanasonicSensors.com 1-800-280-6933

Address	Name	Description	Read-ing	Writ-ing
DT90098	Step ladder process (608 to 623)	Indicates the startup condition of the step ladder process. When the process starts up, the bit corresponding to the process number turns on. Monitor using binary display <Example> 15 11 7 3 0 (Bit No.) DT90100 15 11 7 3 0 (Process No.) 1: Executing 0: Not-executing A programming tool software can be used to write data.	A	A
DT90099	Step ladder process (624 to 639)			
DT90100	Step ladder process (640 to 655)			
DT90101	Step ladder process (656 to 671)			
DT90102	Step ladder process (672 to 687)			
DT90103	Step ladder process (688 to 703)			
DT90104	Step ladder process (704 to 719)			
DT90105	Step ladder process (720 to 735)			
DT90106	Step ladder process (736 to 751)			
DT90107	Step ladder process (752 to 767)			
DT90108	Step ladder process (768 to 783)			
DT90109	Step ladder process (784 to 799)			
DT90110	Step ladder process (800 to 815)			
DT90111	Step ladder process (816 to 831)			
DT90112	Step ladder process (832 to 847)			
DT90113	Step ladder process (848 to 863)			
DT90114	Step ladder process (864 to 879)			
DT90115	Step ladder process (880 to 895)			
DT90116	Step ladder process (896 to 911)			
DT90117	Step ladder process (912 to 927)			
DT90118	Step ladder process (928 to 943)			
DT90119	Step ladder process (944 to 959)			
DT90120	Step ladder process (960 to 975)			
DT90121	Step ladder process (976 to 991)			
DT90122	Step ladder process (992 to 999) (higher byte is not used.)			

Ramco National www.PanasonicSensors.com 1-800-280-6933

FP-X (A: Available, N/A: Not available)

Address	Name	Description	Read-ing	Writ-ing
DT90123	**Not used**	-	N/A	N/A
DT90124	**COM1 SEND/RECV instruction end code**	For details, refer to Programming Manual (F145 and F146).	N/A	N/A
DT90125	**COM2 SEND/RECV instruction end code**	For details, refer to Programming Manual (F145 and F146).	N/A	N/A
DT90126	**Forced ON/OFF operating station display**	Used by the system	N/A	N/A
DT90127 to DT90139	**Not used**	-	N/A	N/A
DT90140	**MEWNET-W0 PC(PLC) link 0 status**	The number of times the receiving operation is performed.	A	N/A
DT90141		The current interval between two receiving operations: value in the register x 2.5ms		
DT90142		The minimum inerval between two receiving operations: value in the register x 2.5ms		
DT90143		The maximum interval between two receiving operations: value in the register x 2.5ms		
DT90144		The number of times the sending operation is performed.		
DT90145		The current interval between two sending operations: value in the register x 2.5ms		
DT90146		The minimum interval between two sending operations: value in the register x 2.5ms		
DT90147		The maximum interval between two sending operations: value in the register x 2.5ms		
DT90148	**MEWNET-W0 PC(PLC) link 1 status**	The number of times the receiving operation is performed.	A	N/A
DT90149		The current interval between two receiving operations: value in the register x 2.5ms		
DT90150		The minimum inerval between two receiving operations: value in the register x 2.5ms		
DT90151		The maximum interval between two receiving operations: value in the register x 2.5ms		
DT90152		The number of times the sending operation is performed.		
DT90153		The current interval between two sending operations: value in the register x 2.5ms		
DT90154		The minimum interval between two sending operations: value in the register x 2.5ms		
DT90155		The maximum interval between two sending operations: value in the register x 2.5ms		
DT90156	**MEWNET-W0 PC(PLC) link 0 status**	Area used for measurement of receiving interval.	A	N/A
DT90157		Area used for measurement of sending interval.		

Ramco National www.PanasonicSensors.com 1-800-280-6933

FP-X (A: Available, N/A: Not available)

Address	Name	Description	Read-ing	Writ-ing
DT90158	**MEWNET-W0 PC(PLC) link 1 status**	Area used for measurement of receiving interval.	A	N/A
DT90159		Area used for measurement of sending interval.		
DT90160	**MEWNET-W0 PC(PLC) link 0 unit No.**	Stores the unit No. of PC(PLC) link 0.	A	N/A
DT90161	**MEWNET-W0 PC(PLC) link 0 error flag**	Stores the error contents of PC(PLC) link 0.	A	N/A
DT90162 to DT90169	**Not used**	-	N/A	N/A
DT90170	**MEWNET-W0 PC(PLC) link 0 status**	Duplicated destination for PC(PLC) inter-link address	A	N/A
DT90171		Counts how many times a token is lost.		
DT90172		Counts how many times two or more tokens are detected.		
DT90173		Counts how many times a signal is lost.		
DT90174		No. of times underfined commands have been received.		
DT90175		No. of times sum check errors have occurred during reception.		
DT90176		No. of times format errors have occurred in received data.		
DT90177		No. of times transmission errors have occurred.		
DT90178		No. of times procedural errors have occurred.		
DT90179		No. of times overlapping parent units have occurred.		
DT90180 to DT90189	**Not used**	-	N/A	N/A
DT90190	**Not used**	-	N/A	N/A
DT90191	**Not used**	-	N/A	N/A
DT90192	**Not used**	-	N/A	N/A
DT90193	**Not used**	-	N/A	N/A
DT90194 to DT90218	**Not used**	-	N/A	N/A

Ramco National www.PanasonicSensors.com 1-800-280-6933

FP-X (A: Available, N/A: Not available)

Address	Name		Description	Read-ing	Writ-ing
DT90219	Unit No. (Station No.) selection for DT90220 to DT90251		0: Unit No. (Station No.) 1 to 8, 1: Unit No. (Station No.) 9 to 16	A	N/A
DT90220	PC(PLC) link Unit (station) No. 1 or 9	System register 40 and 41	The contents of the system register settings partaining to the PLC inter-link function for the various unit numbers are stored as shown below. <Example> When DT90219 is 0 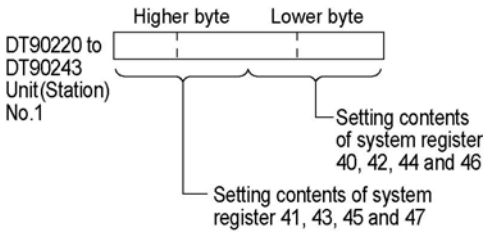 • When the system register 46 in the home unit is in the standard setting, the values in the home unit are copied in the system registers 46 and 47. When the system register 46 in the home unit is in the reverse setting, the registers 40 to 45 and 47 corresponding to the home unit mentioned in the left column will be changed to 50 to 55 and 57, and the system register 46 will be set as it is. Also, the system registers 40 to 45 corresponding to other units will be changed to the values which the received values are corrected, and the registers 46 and 57 in the home unit are set for the registers 46 and 47.	A	N/A
DT90221		System register 42 and 43			
DT90222		System register 44 and 45			
DT90223		System register 46 and 47			
DT90224	PC(PLC) link Unit (station) No. 2 or 10	System register 40 and 41			
DT90225		System register 42 and 43			
DT90226		System register 44 and 45			
DT90227		System register 46 and 47			
DT90228	PC(PLC) link Unit (station) No. 3 or 11	System register 40 and 41			
DT90229		System register 42 and 43			
DT90230		System register 44 and 45			
DT90231		System register 46 and 47			
DT90232	PC(PLC) link Unit (station) No. 4 or 12	System register 40 and 41			
DT90233		System register 42 and 43			
DT90234		System register 44 and 45			
DT90235		System register 46 and 47			
DT90236	PC(PLC) link Unit (station) No. 5 or 13	System register 40 and 41			
DT90237		System register 42 and 43			
DT90238		System register 44 and 45			
DT90239		System register 46 and 47			

Ramco National www.PanasonicSensors.com 1-800-280-6933

FP-X (A: Available, N/A: Not available)

<table>
<tr><th>Address</th><th colspan="2">Name</th><th>Description</th><th>Read-ing</th><th>Writ-ing</th></tr>
<tr><td>DT90240</td><td rowspan="4">PC(PLC) link Unit (station) No. 6 or 14</td><td>System register 40 and 41</td><td rowspan="12">The contents of the system register settings partaining to the PLC inter-link function for the various unit numbers are stored as shown below.

<Example> when DT90219 is 0.
 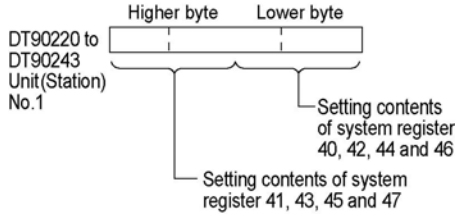

• When the system register 46 in the home unit is in the standard setting, the values in the home unit are copied in the system registers 46 and 47.
When the system register 46 in the home unit is in the reverse setting, the registers 40 to 45 and 47 corresponding to the home unit mentioned in the left column will be changed to 50 to 55 and 57, and the system register 46 will be set as it is.
Also, the system registers 40 to 45 corresponding to other units will be changed to the values which the received values are corrected, and the registers 46 and 57 in the home unit are set for the registers 46 and 47.</td><td rowspan="12">A</td><td rowspan="12">N/A</td></tr>
<tr><td>DT90241</td><td>System register 42 and 43</td></tr>
<tr><td>DT90242</td><td>System register 44 and 45</td></tr>
<tr><td>DT90243</td><td>System register 46 and 47</td></tr>
<tr><td>DT90244</td><td rowspan="4">PC(PLC) link Unit (station) No. 7 or 15</td><td>System register 40 and 41</td></tr>
<tr><td>DT90245</td><td>System register 42 and 43</td></tr>
<tr><td>DT90246</td><td>System register 44 and 45</td></tr>
<tr><td>DT90247</td><td>System register 46 and 47</td></tr>
<tr><td>DT90248</td><td rowspan="4">PC(PLC) link Unit (station) No. 8 or 16</td><td>System register 40 and 41</td></tr>
<tr><td>DT90249</td><td>System register 42 and 43</td></tr>
<tr><td>DT90250</td><td>System register 44 and 45</td></tr>
<tr><td>DT90251</td><td>System register 46 and 47</td></tr>
<tr><td>DT90252</td><td colspan="2">Not used</td><td></td><td rowspan="4">N/A</td><td rowspan="4">N/A</td></tr>
<tr><td>DT90253</td><td colspan="2">Not used</td><td></td></tr>
<tr><td>DT90254</td><td colspan="2">Not used</td><td></td></tr>
<tr><td>DT90255</td><td colspan="2">Not used</td><td></td></tr>
<tr><td>DT90256</td><td colspan="2">Not used</td><td></td><td>N/A</td><td>N/A</td></tr>
</table>

Ramco National www.PanasonicSensors.com 1-800-280-6933

FP-X (A: Available, N/A: Not available)

Address	Name			Description	Read-ing	Writ-ing
DT90300	Elapsed value area	Lower words	HSC-CH0	Counting area for input (X0) or (X0, X1) of the main unit.	A	A Note)
DT90301		Higher words			A	A Note)
DT90302	Target value area	Lower words		The target value is set when instructions F166 (HC1S) and F167 (HC1R) are executed.	A	A Note)
DT90303		Higher words			A	A Note)
DT90304	Elapsed value area	Lower words	HSC-CH1	Counting area for input (X1) of the main unit.	A	A Note)
DT90305		Higher words			A	A Note)
DT90306	Target value area	Lower words		The target value is set when instructions F166 (HC1S) and F167 (HC1R) are executed.	A	A Note)
DT90307		Higher words			A	A Note)
DT90308	Elapsed value area	Lower words	HSC-CH2	Counting area for input (X2) or (X2, X3) of the main unit.	A	A Note)
DT90309		Higher words			A	A Note)
DT90310	Target value area	Lower words		The target value is set when instructions F166 (HC1S) and F167 (HC1R) are executed.	A	A Note)
DT90311		Higher words			A	A Note)
DT90312	Elapsed value area	Lower words	HSC-CH3	Counting area for input (X3) of the main unit.	A	A Note)
DT90313		Higher words			A	A Note)
DT90314	Target value area	Lower words		The target value is set when instructions F166 (HC1S) and F167 (HC1R) are executed.	A	A Note)
DT90315		Higher words			A	A Note)
DT90316	Elapsed value area	Lower words	HSC-CH4	Counting area for input (X4) or (X4, X5) of the main unit.	A	A Note)
DT90317		Higher words			A	A Note)
DT90318	Target value area	Lower words		The target value is set when instructions F166 (HC1S) and F167 (HC1R) are executed.	A	A Note)
DT90319		Higher words			A	A Note)

Note) Writing in the elapsed value area is available by F1 (DMV) instruction only.
Writing in the target value area is available by F166 (HC1S) and F167 (HC1R) instructions only.

Ramco National www.PanasonicSensors.com 1-800-280-6933

FP-X (A: Available, N/A: Not available)

Address	Name			Description	Read-ing	Writ-ing
DT90320	Elapsed value area	Lower words	HSC-CH5	Counting area for input (X5) of the main unit.	A	A Note1)
DT90321		Higher words			A	A Note1)
DT90322	Target value area	Lower words		The target value is set when instructions F166 (HC1S) and F167 (HC1R) are executed.	A	A Note1)
DT90323		Higher words			A	A Note1)
DT90324	Elapsed value area	Lower words	HSC-CH6	Counting area for input (X6) or (X6, X7) of the main unit.	A	A Note1)
DT90325		Higher words			A	A Note1)
DT90326	Target value area	Lower words		The target value is set when instructions F166 (HC1S) and F167 (HC1R) are executed.	A	A Note1)
DT90327		Higher words			A	A Note1)
DT90328	Elapsed value area	Lower words	HSC-CH7	Counting area for input (X7) of the main unit.	A	A Note1)
DT90329		Higher words			A	A Note1)
DT90330	Target value area	Lower words		The target value is set when instructions F166 (HC1S) and F167 (HC1R) are executed.	A	A Note1)
DT90331		Higher words			A	A Note1)
DT90332	Elapsed value area	Lower words	HSC-CH8 Note2)	Counting area for input (X0) or (X0, X1) of the main unit.	A	A Note1)
DT90333		Higher words			A	A Note1)
DT90334	Target value area	Lower words		The target value is set when instructions F166 (HC1S) and F167 (HC1R) are executed.	A	A Note1)
DT90335		Higher words			A	A Note1)

Note1) Writing in the elapsed value area is available by F1 (DMV) instruction only.
Writing in the target value area is available by F166 (HC1S) and F167 (HC1R) instructions only.
Note2) Available for the FP-X Ry type only.

Ramco National www.PanasonicSensors.com 1-800-280-6933

FP-X (A: Available, N/A: Not available)

Address	Name			Description	Read-ing	Writ-ing
DT90336	Elapsed value area	Lower words	HSC-CH9 Note2)	Counting area for input (X1) of the pulse I/O cassette.	A	A Note1)
DT90337		Higher words			A	A Note1)
DT90338	Target value area	Lower words		The target value is set when instructions F166 (HC1S) and F167 (HC1R) are executed.	A	A Note1)
DT90339		Higher words			A	A Note1)
DT90340	Elapsed value area	Lower words	HSC-CHA Note2)	Counting area for input (X3) or (X3, X4) of the pulse I/O cassette.	A	A Note1)
DT90341		Higher words			A	A Note1)
DT90342	Target value area	Lower words		The target value is set when instructions F166 (HC1S) and F167 (HC1R) are executed.	A	A Note1)
DT90343		Higher words			A	A Note1)
DT90344	Elapsed value area	Lower words	HSC-CHB Note2)	Counting area for input (X4) of the pulse I/O cassette.	A	A Note1)
DT90345		Higher words			A	A Note1)
DT90346	Target value area	Lower words		The target value is set when instructions F166 (HC1S) and F167 (HC1R) are executed.	A	A Note1)
DT90347		Higher words			A	A Note1)

Note1) Writing in the elapsed value area is available by F1 (DMV) instruction only.
Writing in the target value area is available by F166 (HC1S) and F167 (HC1R) instructions only.
Note2) Available for the FP-X Tr type only.

Ramco National www.PanasonicSensors.com 1-800-280-6933

FP-X Tr type　　FP-X　(A: Available, N/A: Not available)

Address	Name			Description	Read-ing	Writ-ing
DT90348	Elapsed value area	Lower words	PLS-CH0	Counting area for the pulse output CH0 (Y0, Y1).	A	A Note)
DT90349		Higher words			A	A Note)
DT90350	Target value area	Lower words		The target value is set when instructions F171 (SPDH), F172 (PLSH), F174 (SP0H) and F175 (SPSH) are executed.	A	A Note)
DT90351		Higher words			A	A Note)
DT90352	Elapsed value area	Lower words	PLS-CH1	Counting area for the pulse output CH1 (Y2, Y3).	A	A Note)
DT90353		Higher words			A	A Note)
DT90354	Target value area	Lower words		The target value is set when instructions F171 (SPDH), F172 (PLSH), F174 (SP0H) and F175 (SPSH) are executed.	A	A Note)
DT90355		Higher words			A	A Note)
DT90356	Elapsed value area	Lower words	PLS-CH2	Counting area for the pulse output CH2 (Y4, Y5).	A	A Note)
DT90357		Higher words			A	A Note)
DT90358	Target value area	Lower words		The target value is set when instructions F171 (SPDH), F172 (PLSH), F174 (SP0H) and F175 (SPSH) are executed.	A	A Note)
DT90359		Higher words			A	A Note)
DT90360	Elapsed value area	Lower words	PLS-CH3	Counting area for the pulse output CH3 (Y6, Y7).	A	A Note)
DT90361		Higher words			A	A Note)
DT90362	Target value area	Lower words		The target value is set when instructions F171 (SPDH), F172 (PLSH), F174 (SP0H) and F175 (SPSH) are executed.	A	A Note)
DT90363		Higher words			A	A Note)

Note) Writing in the elapsed value area is available by F1 (DMV) instruction only.
Writing in the target value area is available by F171 (SPDH), F172 (PLSH), F174 (SP0H) and F175 (SPSH) instructions only.

Ramco National　www.PanasonicSensors.com　1-800-280-6933

FP-X Tr type FP-X (A: Available, N/A: Not available)

Address	Name		Description	Read-ing	Writ-ing
DT90370	**Control flag monitor area**	**HSC-CH0**	When HSC control is executed by F0 (MV)S, DT90052 instruction, the setting value for the target CH is stored in each CH.	A	N/A
DT90371		**HSC-CH1**		A	N/A
DT90372		**HSC-CH2**		A	N/A
DT90373		**HSC-CH3**		A	N/A
DT90374		**HSC-CH4**		A	N/A
DT90375		**HSC-CH5**		A	N/A
DT90376		**HSC-CH6**		A	N/A
DT90377		**HSC-CH7**		A	N/A
DT90378					
DT90379					
DT90380		**PLS-CH0**		A	N/A
DT90381		**PLS-CH1**		A	N/A
DT90382		**PLS-CH2**		A	N/A
DT90383		**PLS-CH3**		A	N/A

Note) Writing in the elapsed value area is available by F1 (DMV) instruction only.
Writing in the target value area is available by F171 (SPDH), F172 (PLSH), F174 (SP0H) and F175 (SPSH) instructions only.

Ramco National www.PanasonicSensors.com 1-800-280-6933

Address	Name			Description	Read-ing	Writ-ing
DT90348	Elapsed value area	Lower words	PLS-CH0	Counting area for output (Y100, Y101) of the pulse I/O cassette.	A	A Note)
DT90349		Higher words			A	A Note)
DT90350	Target value area	Lower words		The target value is set when instructions F171 (SPDH), F172 (PLSH), F174 (SP0H) and F175 (SPSH) are executed.	A	A Note)
DT90351		Higher words			A	A Note)
DT90352	Elapsed value area	Lower words	PLS-CH1	Counting area for output (Y200, Y201) of the pulse I/O cassette.	A	A Note)
DT90353		Higher words			A	A Note)
DT90354	Target value area	Lower words		The target value is set when instructions F171 (SPDH), F172 (PLSH), F174 (SP0H) and F175 (SPSH) are executed.	A	A Note)
DT90355		Higher words			A	A Note)
DT90356	Not used			-	N/A	N/A
DT90357	Not used			-	N/A	N/A
DT90358	Not used			-	N/A	N/A
DT90359	Not used			-	N/A	N/A
DT90360	Control flag monitor area		HSC-CH0	When HSC control is executed by F0 (MV)S, DT90052 instruction, the setting value for the target CH is stored in each CH.	A	N/A
DT90361			HSC-CH1		A	N/A
DT90362			HSC-CH2		A	N/A
DT90363			HSC-CH3		A	N/A
DT90364			HSC-CH4		A	N/A
DT90365			HSC-CH5		A	N/A
DT90366			HSC-CH6		A	N/A
DT90367			HSC-CH7		A	N/A
DT90368			HSC-CH8		A	N/A
DT90369			HSC-CH9		A	N/A
DT90370			HSC-CHA		A	N/A
DT90371			HSC-CHB		A	N/A
DT90372			PLS-CH0		A	N/A
DT90373			PLS-CH1		A	N/A

Note) Writing in the elapsed value area is available by F1 (DMV) instruction only.
Writing in the target value area is available by F171 (SPDH), F172 (PLSH), F174 (SP0H) and F175 (SPSH) instructions only.

Ramco National www.PanasonicSensors.com 1-800-280-6933

17.2 Table of Basic Instructions

Name	Boolean	Symbol	Description	Steps *3	FP0/FP-e	FP0R	FPΣ	FP-X	FP2	FP2SH/FP10SH
Sequence basic instructions										
Start	**ST**		Begins a logic operation with a Form A (normally open) contact.	1 (2)	○	○	○	○	○	○
Start Not	**ST/**		Begins a logic operation with a Form B (normally closed) contact.	1 (2)	○	○	○	○	○	○
Out	**OT**		Outputs the operated result to the specified output.	1 (2)	○	○	○	○	○	○
Not	**/**	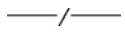	Inverts the operated result up to this instruction.	1	○	○	○	○	○	○
AND	**AN**		Connects a Form A (normally open) contact serially.	1 (2)	○	○	○	○	○	○
AND Not	**AN/**		Connects a Form B (normally closed) contact serially.	1 (2)	○	○	○	○	○	○
OR	**OR**		Connects a Form A (normally open) contact in parallel.	1 (2)	○	○	○	○	○	○
OR Not	**OR/**		Connects a Form B (normally closed) contact in parallel.	1 (2)	○	○	○	○	○	○
Leading edge start	**ST↑**		Begins a logic operation only for one scan when the leading edge of the trigger is detected.	2	×	○	△ *2	△ *2	○	○
Trailing edge start	**ST↓**		Begins a logic operation only for one scan when the trailing edge of the trigger is detected.	2	×	○	△ *2	△ *2	○	○
Leading edge AND	**AN↑**		Connects a Form A (normally open) contact serially only for one scan when the leading edge of the trigger is detected.	2	×	○	△ *2	△ *2	○	○
Trailing edge AND	**AN↓**		Connects a Form A (normally open) contact serially only for one scan when the trailing edge of the trigger is detected.	2	×	○	△ *2	△ *2	○	○
Leading edge OR	**OR↑**		Connects a Form A (normally open) contact in parallel only for one scan when the leading edge of the trigger is detected.	2	×	○	△ *2	△ *2	○	○
Trailing edge OR	**OR↓**		Connects a Form A (normally open) contact in parallel only for one scan when the trailing edge of the trigger is detected.	2	×	○	△ *2	△ *2	○	○
Leading edge out	**OT↑**		Outputs the operated result to the specified output only for one scan when leading edge of the trigger is detected. (for pulse relay)	2	×	×	×	×	○	○
Trailing edge out	**OT↓**	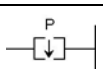	Outputs the operated result to the specified output only for one scan when trailing edge of the trigger is detected. (for pulse relay)	2	×	×	×	×	○	○
Alterna-tive out	**ALT**		Inverts the output condition (on/off) each time the leading edge of the trigger is detected.	3	×	○	○	○	○	○
AND stack	**ANS**		Connects the multiple instruction blocks serially.	1	○	○	○	○	○	○
OR stack	**ORS**	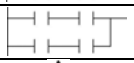	Connects the multiple instruction blocks in parallel.	1	○	○	○	○	○	○

○: Available, ×: Not available, △: Not available partially

*1) The type of the devices that can be specified depends on the models.

*2) This instruction is available for FP-X Ver. 2.0 or later, and FPΣ Ver. 3.10 or later.

*3) In the FP2/FP2SH/10SH, when using X1280, Y1280, R1120 (special internal relay included), L1280, T256, C256 or anything beyond for the ST, ST/, OT, AN, AN/, OR and OR/ instructions, the number of steps is shown in parentheses. Also, in the FP2/FP2SH/FP10SH, when a relay number has an index modifier, the number of steps is shown in parentheses. For the FPΣ and FP-X, the number of steps varies according to the relay number to be used.

Ramco National www.PanasonicSensors.com 1-800-280-6933

Name	Boolean	Symbol	Description	Steps *5 *6	FP0/FP-e	FP0R	FPΣ	FP-X	FP2	FP2SH/FP10SH
Push stack	**PSHS**	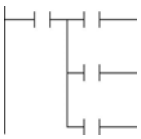	Stores the operated result up to this instruction. *2	1	○	○	○	○	○	○
Read stack	**RDS**		Reads the operated result stored by the PSHS instruction. *2	1	○	○	○	○	○	○
Pop stack	**POPS**		Reads and clears the operated result stored by the PSHS instruction	1	○	○	○	○	○	○
Leading edge differential	**DF**	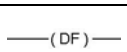	Turns on the contact for only one scan when the leading edge of the trigger is detected.	1	○	○	○	○	○	○
Trailing edge differential	**DF/**	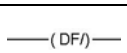	Turns on the contact for only one scan when the trailing edge of the trigger is detected.	1	○	○	○	○	○	○
Leading edge differential (initial execution type)	**DFI**		Turns on the contact for only one scan when the leading edge of the trigger is detected. The leading edge detection is possible on the first scan.	1	×	○	○	○	○	○
Set	**SET**	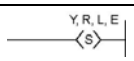	Output is set to and held at on.	3	○	○	○	○	○	○
Reset	**RST**	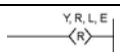	Output is set to and held at off.	3	○	○	○	○	○	○
Keep	**KP**	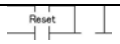	Outputs at set trigger and holds until reset trigger turns on.	1 (2)	○	○	○	○	○	○
No operation	**NOP**	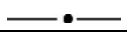	No operation.	1	○	○	○	○	○	○
Basic function instructions										
On-delay timer	**TML**	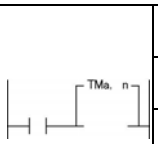	After set value “n” x 0.001 seconds, timer contact “a” is set to on.	3 (4)	○	○	○	○	○	○ *3
	TMR		After set value “n” x 0.01 seconds, timer contact “a” is set to on.	3 (4)	○	○	○	○	○	○ *3
	TMX		After set value “n” x 0.1 seconds, timer contact “a” is set to on.	3 (4)	○	○	○	○	○	○ *3
	TMY		After set value “n” x 1 second, timer contact “a” is set to on.	4 (5)	○	○	○	○	○	○ *3
Auxiliary timer (16-bit)	**F137 (STMR)**		After set value “S” x 0.01 seconds, the specified output and R900D are set to on.	5	○	○	○	○	○	○
Auxiliary timer (32-bit)	**F183 (DSTM)**		After set value “S” x 0.01 seconds, the specified output and R900D are set to on.	7	○	○	○	○	○	○
Time constant processing	**F182**		Executes the filter processing for the specified input.	9	×	○	○	○	×	×
Counter	**CT**	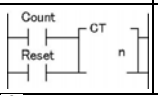	Decrements from the preset value “n”	3 (4)	○	○	○	○	○	○ *3

○: Available, ×: Not available, △: Not available partially

*1) The type of the devices that can be specified depends on the models.

*2) The allowable number of using the PSHS and RDS instruction depends on the models.

*3) For FP2SH, FP10SH and FP-X Ver2.0 or later, any device can be set for the setting value of counter or timer instruction.

*4) This instruction is available for FP-X Ver. 2.0 or later.

*5) In the FP2/FP2SH/FP10SH, when using Y1280, R1120 (special internal relay included), L1280 or anything beyond for the KP instruction, the number of steps is shown in parentheses. Also, in the FP2/FP2SH/FP10SH, when a relay number has an index modifier, the number of steps is shown in parentheses.

*6) In the FP2/FP2SH/FP10SH, when timer 256 or higher, or counter 255 or lower, is used, the number of steps is the number in parentheses. Also, in the FP2/FP2SH/FP10SH, when a timer number or counter number has an index modifier, the number of steps is the number in parentheses. For the FPΣ and FP-X, the number of steps varies according to the specified timer number or counter number.

Ramco National www.PanasonicSensors.com 1-800-280-6933

Name	Boolean	Symbol	Description	Steps	FP0/FP-e	FP0R	FPΣ	FP-X	FP2	FP2SH/FP10SH
UP/DOWN counter	**F118 (UDC)**	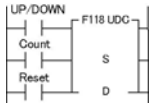	Increments or decrements from the preset value “S” based on up/down input.	5	○	○	○	○	○	○
Shift register	**SR**	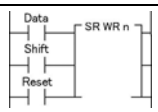	Shifts one bit of 16-bit [word internal relay (WR)] data to the left.	1 (2) *1	○	○	○	○	○	○
Left/right shift register	**F119 (LRSR)**	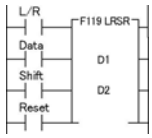	Shifts one bit of 16-bit data range specified by “D1” and “D2” to the left or to the right.	5	○	○	○	○	○	○
Control instructions										
Master control relay	**MC**	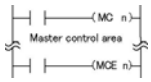	Starts the master control program.	2	○	○	○	○	○	○
Master control relay end	**MCE**		Ends the master control program.	2	○	○	○	○	○	○
Jump **Label**	**JP** **LBL**	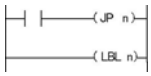	The program jumps to the label instruction and continues from there.	2 (3) *2 1	○	○	○	○	○	○
Auxiliary jump **Label**	**F19 (SJP)** **LBL**	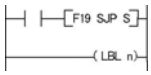	The program jumps to the label instruction specified by “S” and continues from there.	3 1	×	×	×	×	○	○
Loop **Label**	**LOOP** **LBL**	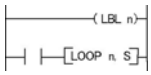	The program jumps to the label instruction and continues from there (the number of jumps is set in “S”).	4 (5) *3 1	○	○	○	○	○	○
Break	**BRK**	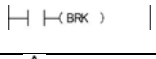	Stops program execution when the predetermined trigger turns on in the TEST/RUN mode only.	1	×	×	×	×	○	○

○: Available, ×: Not available, △: Not available partially

*1) In the FP2/FP2SH/FP10SH, when internal relay WR240 or higher is used, the number of steps is the number in parentheses. Also, in the FP2/FP2SH/FP10SH, when the specified internal relay number (word address) has an index modifier, the number of steps is the number in parentheses.

*2) In the FP2/FP2SH/FP10SH, when the number “n” in a jump instruction has an index modifier, the number of steps isthenumber in parentheses.

*3) In the FP2/FP2SH/FP10SH, when the number “n” in a loop instruction has an index modifier, the number of steps is the number in parentheses.

Ramco National www.PanasonicSensors.com 1-800-280-6933

Name	Boolean	Symbol	Description	Steps	FP0/FP-e	FP0R	FPΣ	FP-X	FP2	FP2SH/FP10SH
End	**ED**	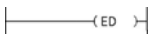	The operation of program is ended. Indicates the end of a main program.	1	○	○	○	○	○	○
Conditional end	**CNDE**	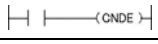	The operation of program is ended when the trigger turns on.	1	○	○	○	○	○	○
Eject	**EJECT**	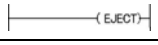	Adds page break for use when printing.	1	×	○	○	○	○	○
Step ladder instructions										
Start step	**SSTP**	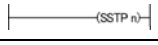	The start of program “n” for process control	3	○	○	○	○	○	○
Next step	**NSTL**		Starts the specified process “n” and clears the process currently started. (Scan execution type)	3	○	○	○	○	○	○
	NSTP		Starts the specified process “n” and clears the process currently started. (Pulse execution type)	3	○	○	○	○	○	○
Clear step	**CSTP**	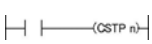	Resets the specified process “n”.	3	○	○	○	○	○	○
Clear multi-ple steps	**SCLR**		Resets multiple processes specified by “n1” and “n2”.	5	△ *1	○	○	○	○	○
Step end	**STPE**	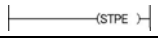	End of step ladder area	1	○	○	○	○	○	○
Subroutine instructions										
Subroutine call	**CALL**	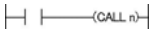	When the trigger is on: Executes the subroutine. When the trigger is off: Not execute the subroutine. The output in the subroutine is maintained.	2 (3) *2	○	○	○	○	○	○
Output off type subroutine call	**FCAL**		When the trigger is on: Executes the subroutine. When the trigger is off: Not execute the subroutine. But, the output in the subroutine is cleared.	4 (5) *2	×	×	×	×	×	○
Subroutine entry	**SUB**		Indicates the start of the subroutine program “n”.	1	○	○	○	○	○	○
Subroutine return	**RET**		Ends the subroutine program.	1	○	○	○	○	○	○
Interrupt instructions										
Interrupt	**INT**	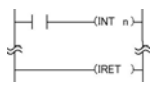	Indicates the start of the interrupt program “n”.	1	○	○	○	○	○	○
Interrupt return	**IRET**		Ends the interrupt program.	1	○	○	○	○	○	○
Interrupt control	**ICTL**	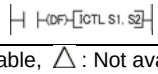	Select interrupt enable/disable or clear in “S1” and “S2” and execute.	5	○	○	○	○	○	○

○: Available, ×: Not available, △: Not available partially

*1) Available for FP-e only.

*2) In the FP2/FP2SH/FP10SH, when the number “n” of a subroutine program has an index modifier, the number of steps is the number in parentheses.

Ramco National www.PanasonicSensors.com 1-800-280-6933

Name	Boolean	Symbol	Description	Steps	FP0/FP-e	FP0R	FPΣ	FP-X	FP2	FP2SH/FP10SH
Special setting instructions										
Communication conditions setting	**SYS1**	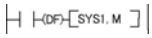	Change the communication conditions for the COM port or tool port based on the contents specified by the character constant.	13	×	○	○ *1	○ *1	×	×
Password setting			Change the password specified by the PLC based on the contents specified by the character constant.		×	○	○ *2	○	×	×
Interrupt setting			Set the interrupt input based on the contents specified by the character constant.		×	○	○	○	×	×
PLC link time setting			Set the system setting time when a PLC link is used, based on the contents specified by the character constant.		×	○	○	○	×	×
MEWTOCOL-COM response control			Change the communication conditions of the COM. port or tool port for MEWTOCOL-COM based on the contents specified by the character constant.		×	○	○	○	×	×
High-speed counter operation mode changing			Change the operation mode of the high-speed counter, based on the contents specified by the character constant.		×	○	○ *3	○ *3	×	×
System registers "No. 40 to No. 47" changing	**SYS2**		Change the setting value of the system register for the PLC link function.	7	×	○	○	○	×	×

○: Available, ×: Not available, △: Not available partially

*1) With FP-X Ver2.0 or later, and FPΣ Ver 3.10 or later, the baud rate can be selected from 300, 600 or 1200 bps.

*2) With FPΣ 32k type, the 8-digit password can be selected.

*3) With FPΣ 32k type and FP-X Ver1.10 or later, it can be used.

Ramco National www.PanasonicSensors.com 1-800-280-6933

Name	Boolean	Symbol	Description	Steps	FP0/FP-e	FP0R	FPΣ	FP-X	FP2	FP2SH/FP10SH
Data compare instructions										
16-bit data compare (Start)	**ST=**		Begins a logic operation by comparing two 16-bit data in the comparative condition “S1=S2”.	5	○	○	○	○	○	○
	ST<>		Begins a logic operation by comparing two 16-bit data in the comparative condition “S1<S2” or “S1>S2”.	5	○	○	○	○	○	○
	ST>	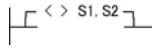	Begins a logic operation by comparing two 16-bit data in the comparative condition “S1>S2”.	5	○	○	○	○	○	○
	ST>=		Begins a logic operation by comparing two 16-bit data in the comparative condition “S1>S2” or “S1=S2”.	5	○	○	○	○	○	○
	ST<	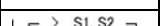	Begins a logic operation by comparing two 16-bit data in the comparative condition “S1<S2”.	5	○	○	○	○	○	○
	ST<=		Begins a logic operation by comparing two 16-bit data in the comparative condition “S1<S2” or “S1=S2”.	5	○	○	○	○	○	○
16-bit data compare (AND)	**AN=**		Connects a Form A (normally open) contact serially by comparing two 16-bit data in the comparative condition “S1=S2”.	5	○	○	○	○	○	○
	AN<>	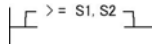	Connects a Form A (normally open) contact serially by comparing two 16-bit data in the comparative condition “S1<S2” or “S1>S2”.	5	○	○	○	○	○	○
	AN>		Connects a Form A (normally open) contact serially by comparing two 16-bit data in the comparative condition “S1>S2”.	5	○	○	○	○	○	○
	AN>=	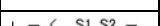	Connects a Form A (normally open) contact serially by comparing two 16-bit data in the comparative condition “S1>S2” or “S1=S2”.	5	○	○	○	○	○	○
	AN<	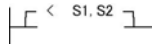	Connects a Form A (normally open) contact serially by comparing two 16-bit data in the comparative condition “S1<S2”.	5	○	○	○	○	○	○
	AN<=		Connects a Form A (normally open) contact serially by comparing two 16-bit data in the comparative condition “S1<S2” or “S1=S2”.	5	○	○	○	○	○	○
16-bit data compare (OR)	**OR=**	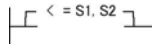	Connects a Form A (normally open) contact in parallel by comparing two 16-bit data in the comparative condition “S1=S2”.	5	○	○	○	○	○	○
	OR<>		Connects a Form A (normally open) contact in parallel by comparing two 16-bit data in the comparative condition “S1<S2” or “S1>S2”.	5	○	○	○	○	○	○
	OR>		Connects a Form A (normally open) contact in parallel by comparing two 16-bit data in the comparative condition “S1>S2”.	5	○	○	○	○	○	○
	OR>=		Connects a Form A (normally open) contact in parallel by comparing two 16-bit data in the comparative condition “S1>S2” or “S1=S2”.	5	○	○	○	○	○	○
	OR<	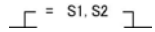	Connects a Form A (normally open) contact in parallel by comparing two 16-bit data in the comparative condition “S1<S2”.	5	○	○	○	○	○	○
	OR<=		Connects a Form A (normally open) contact in parallel by comparing two 16-bit data in the comparative condition “S1<S2” or “S1=S2”.	5	○	○	○	○	○	○

○: Available, ×: Not available, △: Not available partially

Ramco National www.PanasonicSensors.com 1-800-280-6933

Name	Boolean	Symbol	Description	Steps	FP0/FP-e	FP0R	FPΣ	FP-X	FP2	FP2SH/FP10SH
32-bit data compare (Start)	STD=	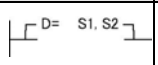	Begins a logic operation by comparing two 32-bit data in the comparative condition “(S1+1, S1)=(S2+1, S2)”.	9	○	○	○	○	○	○
	STD<>		Begins a logic operation by comparing two 32-bit data in the comparative condition “(S1+1, S1)<(S2+1, S2)” or “(S1+1, S1)>(S2+1, S2)”.	9	○	○	○	○	○	○
	STD>		Begins a logic operation by comparing two 32-bit data in the comparative condition “(S1+1, S1)>(S2+1, S2)”.	9	○	○	○	○	○	○
	STD>=	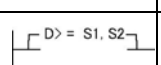	Begins a logic operation by comparing two 32-bit data in the comparative condition “(S1+1, S1)>(S2+1, S2)” or “(S1+1, S1)=(S2+1, S2)”.	9	○	○	○	○	○	○
	STD<		Begins a logic operation by comparing two 32-bit data in the comparative condition “(S1+1, S1)<(S2+1, S2)”.	9	○	○	○	○	○	○
	STD<=	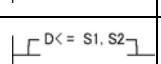	Begins a logic operation by comparing two 32-bit data in the comparative condition “(S1+1, S1)<(S2+1, S2)” or “(S1+1, S1)=(S2+1, S2)”.	9	○	○	○	○	○	○
32-bit data compare (AND)	AND=	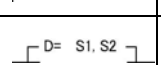	Connects a Form A (normally open) contact serially by comparing two 32-bit data in the comparative condition “(S1+1, S1)=(S2+1, S2)”.	9	○	○	○	○	○	○
	AND<>	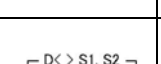	Connects a Form A (normally open) contact serially by comparing two 32-bit data in the comparative condition “(S1+1, S1)<(S2+1, S2)” or “(S1+1, S1)>(S2+1, S2)”.	9	○	○	○	○	○	○
	AND>	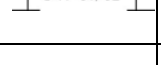	Connects a Form A (normally open) contact serially by comparing two 32-bit data in the comparative condition “(S1+1, S1)>(S2+1, S2)”.	9	○	○	○	○	○	○
	AND>=	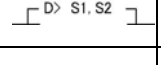	Connects a Form A (normally open) contact serially by comparing two 32-bit data in the comparative condition “(S1+1, S1)>(S2+1, S2)” or “(S1+1, S1)=(S2+1, S2)”.	9	○	○	○	○	○	○
	AND<	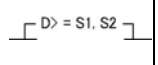	Connects a Form A (normally open) contact serially by comparing two 32-bit data in the comparative condition “(S1+1, S1)<(S2+1, S2)”.	9	○	○	○	○	○	○
	AND<=	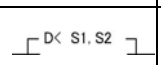	Connects a Form A (normally open) contact serially by comparing two 32-bit data in the comparative condition “(S1+1, S1)<(S2+1, S2)” or “(S1+1, S1)=(S2+1, S2)”.	9	○	○	○	○	○	○
32-bit data compare (OR)	ORD=	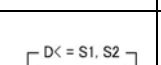	Connects a Form A (normally open) contact in parallel by comparing two 32-bit data in the comparative condition “(S1+1, S1)=(S2+1, S2)”.	9	○	○	○	○	○	○
	ORD<>	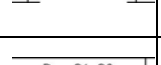	Connects a Form A (normally open) contact in parallel by comparing two 32-bit data in the comparative condition “(S1+1, S1)<(S2+1, S2)” or “(S1+1, S1)>(S2+1, S2)”.	9	○	○	○	○	○	○
	ORD>	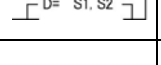	Connects a Form A (normally open) contact in parallel by comparing two 32-bit data in the comparative condition “(S1+1, S1)>(S2+1, S2)”.	9	○	○	○	○	○	○
	ORD>=	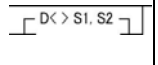	Connects a Form A (normally open) contact in parallel by comparing two 32-bit data in the comparative condition “(S1+1, S1)>(S2+1, S2)” or “(S1+1, S1)=(S2+1, S2)”.	9	○	○	○	○	○	○
	ORD<		Connects a Form A (normally open) contact in parallel by comparing two 32-bit data in the comparative condition “(S1+1, S1)<(S2+1, S2)”.	9	○	○	○	○	○	○
	ORD<=	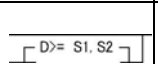	Connects a Form A (normally open) contact in parallel by comparing two 32-bit data in the comparative condition “(S1+1, S1)<(S2+1, S2)” or “(S1+1, S1)=(S2+1, S2)”.	9	○	○	○	○	○	○

○: Available, ×: Not available, △: Not available partially

Ramco National www.PanasonicSensors.com 1-800-280-6933

Name	Boolean	Symbol	Description	Steps	FP0/FP-e	FP0R	FPΣ	FP-X	FP2	FP2SH/FP10SH
Floating point type real number data compare (Start)	STF=	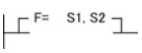	Begins a logic operation by comparing two 32-bit data in the comparative condition “(S1+1, S1)=(S2+1, S2)”.	9	×	○	△ *1	△ *1	×	×
	STF<>		Begins a logic operation by comparing two 32-bit data in the comparative condition “(S1+1, S1)<(S2+1, S2)” or “(S1+1, S1)>(S2+1, S2)”.	9	×	○	△ *1	△ *1	×	×
	STF>		Begins a logic operation by comparing two 32-bit data in the comparative condition “(S1+1, S1)>(S2+1, S2)”.	9	×	○	△ *1	△ *1	×	×
	STF>=	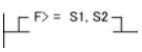	Begins a logic operation by comparing two 32-bit data in the comparative condition “(S1+1, S1)>(S2+1, S2)” or “(S1+1, S1)=(S2+1, S2)”.	9	×	○	△ *1	△ *1	×	×
	STF<		Begins a logic operation by comparing two 32-bit data in the comparative condition “(S1+1, S1)<(S2+1, S2)”.	9	×	○	△ *1	△ *1	×	×
	STF<=	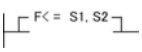	Begins a logic operation by comparing two 32-bit data in the comparative condition “(S1+1, S1)<(S2+1, S2)” or “(S1+1, S1)=(S2+1, S2)”.	9	×	○	△ *1	△ *1	×	×
Floating point type real number data compare (AND)	ANF=		Connects a Form A (normally open) contact serially by comparing two 32-bit data in the comparative condition “(S1+1, S1)=(S2+1, S2)”.	9	×	○	△ *1	△ *1	×	×
	ANF<>		Connects a Form A (normally open) contact serially by comparing two 32-bit data in the comparative condition “(S1+1, S1)<(S2+1, S2)” or “(S1+1, S1)>(S2+1, S2)”.	9	×	○	△ *1	△ *1	×	×
	ANF>		Connects a Form A (normally open) contact serially by comparing two 32-bit data in the comparative condition “(S1+1, S1)>(S2+1, S2)”.	9	×	○	△ *1	△ *1	×	×
	ANF>=		Connects a Form A (normally open) contact serially by comparing two 32-bit data in the comparative condition “(S1+1, S1)>(S2+1, S2)” or “(S1+1, S1)=(S2+1, S2)”.	9	×	○	△ *1	△ *1	×	×
	ANF<	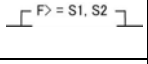	Connects a Form A (normally open) contact serially by comparing two 32-bit data in the comparative condition “(S1+1, S1)<(S2+1, S2)”.	9	×	○	△ *1	△ *1	×	×
	ANF<=		Connects a Form A (normally open) contact serially by comparing two 32-bit data in the comparative condition “(S1+1, S1)<(S2+1, S2)” or “(S1+1, S1)=(S2+1, S2)”.	9	×	○	△ *1	△ *1	×	×
Floating point type real number data compare (OR)	ORF=	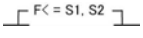	Connects a Form A (normally open) contact in parallel by comparing two 32-bit data in the comparative condition “(S1+1, S1)=(S2+1, S2)”.	9	×	○	△ *1	△ *1	×	×
	ORF<>		Connects a Form A (normally open) contact in parallel by comparing two 32-bit data in the comparative condition “(S1+1, S1)<(S2+1, S2)” or “(S1+1, S1)>(S2+1, S2)”.	9	×	○	△ *1	△ *1	×	×
	ORF>	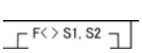	Connects a Form A (normally open) contact in parallel by comparing two 32-bit data in the comparative condition “(S1+1, S1)>(S2+1, S2)”.	9	×	○	△ *1	△ *1	×	×
	ORF>=	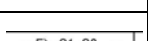	Connects a Form A (normally open) contact in parallel by comparing two 32-bit data in the comparative condition “(S1+1, S1)>(S2+1, S2)” or “(S1+1, S1)=(S2+1, S2)”.	9	×	○	△ *1	△ *1	×	×
	ORF<		Connects a Form A (normally open) contact in parallel by comparing two 32-bit data in the comparative condition “(S1+1, S1)<(S2+1, S2)”.	9	×	○	△ *1	△ *1	×	×
	ORF<=		Connects a Form A (normally open) contact in parallel by comparing two 32-bit data in the comparative condition “(S1+1, S1)<(S2+1, S2)” or “(S1+1, S1)=(S2+1, S2)”.	9	×	○	△ *1	△ *1	×	×

○: Available, ×: Not available, △: Not available partially

*1) This instruction is available for FP-X V1.10 or later and FPΣ 32k type

Ramco National www.PanasonicSensors.com 1-800-280-6933

17.3 Table of High-level Instructions

The high-level instructions are expressed by the prefixes “F” or “P” with numbers. For most of the high-level instructions, “F” and “P” types are available. The differences between the two types are explained as follows:
- Instructions with the prefix “F” are executed in every scan while its trigger is in the on.
- Instructions with the prefix “P” are executed only when the leading edge of its trigger is detected.

For the FP0/FP0R/FPΣ/FP-X, the P type high-level instructions are not available.

Number	Name	Boolean	Operand	Description	Steps	FP0/FP-e	FP0R	FPΣ	FP-X	FP2	FP2SH/FP10SH
Data transfer instructions											
F0 P0	**16-bit data move**	**MV PMV**	S, D	(S)→(D)	5	○	○	○	○	○	○
F1 P1	**32-bit data move**	**DMV PDMV**	S, D	(S+1, S)→(D+1, D)	7	○	○	○	○	○	○
F2 P2	**16-bit data invert and move**	**MV PMV/**	S, D	$(\overline{S})$→(D)	5	○	○	○	○	○	○
F3 P3	**32-bit data invert and move**	**DMV/ PDMV/**	S, D	$(\overline{S+1, S})$→(D+1, D)	7	○	○	○	○	○	○
F4 P4	**Reading of head word No. of the specified slot**	**GETS PGETS**	S, D	The head word No. of the specified slot is read.	5	×	×	×	×	△ *1	△ *1
F5 P5	**Bit data move**	**BTM PBTM**	S, n, D	The specified one bit in “S” is transferred to the specified one bit in “D”. The bit is specified by “n”.	7	○	○	○	○	○	○
F6 P6	**Hexadecimal digit (4-bit) data move**	**DGT PDGT**	S, n, d	The specified one digit in “S” is transferred to the specified one digit in “D”. The digit is specified by “n”.	7	○	○	○	○	○	○
F7 P7	**Two 16-bit data move**	**MV2 PMV2**	S1, S2, D	(S1)→(D), (S2)→(D+1)	7	×	○	○	○	○	○
F8 P8	**Two 32-bit data move**	**DMV2 PDMV2**	S1, S2, D	(S1+1, S1)→(D+1, D), (S2+1, S2)→(D+3, D+2)	11	×	○	○	○	○	○
F10 P10	**Block move**	**BKMV PBKMV**	S1, S2, D	The data between “S1” and “S2” is transferred to the area starting at “D”.	7	○	○	○	○	○	○
F11 P11	**Block copy**	**COPY PCOPY**	S, D1, D2	The data of “S” is transferred to the all area between “D1” and “D2”.	7	○	○	○	○	○	○
F12	**Data read from EEP-ROM**	**ICRD**	S1, S2, D	The data stored in the expansion memory of the EEP-ROM specified by “S1” and “S2” are transferred to the area starting at “D”.	11	○ *2	×	×	×	×	×
P13	**Data write to EEP-ROM**	**PICWT**	S1, S2, D	The data specified by “S1” and “S2” are transferred to the EEP-ROM starting at “D”.	11	○ *2	×	×	×	×	×
F12	**Data read from F-ROM**	**ICRD**	S1, S2, D	The data stored in the expansion memory of the F-ROM specified by “S1” and “S2” are transferred to the area starting at “D”.	11	×	○	○	○	×	×
P13	**Data write to F-ROM**	**PICWT**	S1, S2, D	The data specified by “S1” and “S2” are transferred to the F-ROM starting at “D”.	11	×	○	○	○	×	×
F12 P12	**Data read from IC card**	**ICRD PICRD**	S1, S2, D	The data stored in the expansion memory of the IC card specified by “S1” and “S2” are transferred to the area starting at “D”.	11	×	×	×	×	×	○
F13 P13	**Data write to IC card**	**ICWT PICWT**	S1, S2, D	The data specified by “S1” and “S2” are transferred to the IC card expansion memory area starting at “D”.	11	×	×	×	×	×	○
F14 P14	**Program read from IC memory card**	**PGRD PPGRD**	S	The program specified using “S” is transferred into the CPU from IC memory card and executes it.	3	×	×	×	×	×	○

○: Available, ×: Not available, △: Not available partially

*1) This instruction is available for FP2/FP2SH Ver. 1.5 or later.FP10SH cannot be used

*2) This instruction is available for FP0 Ver. 2.0 or later and FP-e.

Ramco National www.PanasonicSensors.com 1-800-280-6933

Number	Name	Boo-lean	Operand	Description	Steps	FP0/FP-e	FP0R	FPΣ	FP-X	FP2	FP2SH/FP10SH
F15 P15	**16-bit data exchange**	**XCH PXCH**	D1, D2	(D1)→(D2), (D2)→(D1)	5	○	○	○	○	○	○
F16 P16	**32-bit data exchange**	**DXCH PDXCH**	D1, D2	(D1+1, D1)→(D2+1, D2) (D2+1, D2)→(D1+1, D1)	5	○	○	○	○	○	○
F17 P17	**Higher/lower byte in 16-bit data exchange**	**SWAP PSWAP**	D	The higher byte and lower byte of "D" are exchanged.	3	○	○	○	○	○	○
F18 P18	**16-bit data block exchange**	**BXCH PBXCH**	D1, D2, D3	Exchange the data between "D1" and "D2" with the data specified by "D3".	7	×	○	○	○	○	○
Control instruction											
F19	**Auxiliary jump**	**SJP**	S	The program jumps to the label instruction specified by "S" and continues from there.	3	×	×	×	×	○	○
Binary arithmetic instructions											
F20 P20	**16-bit data addition**	**+ P+**	S, D	(D)+(S)→(D)	5	○	○	○	○	○	○
F21 P21	**32-bit data addition**	**D+ PD+**	S, D	(D+1, D)+(S+1, S)→(D+1, D)	7	○	○	○	○	○	○
F22 P22	**16-bit data addition**	**+ P+**	S1, S2, D	(S1)+(S2)→(D)	7	○	○	○	○	○	○
F23 P23	**32-bit data addition**	**D+ PD+**	S1, S2, D	(S1+1, S1)+(S2+1, S2)→(D+1, D)	11	○	○	○	○	○	○
F25 P25	**16-bit data subtraction**	**- P-**	S, D	(D)-(S)→(D)	5	○	○	○	○	○	○
F26 P26	**32-bit data subtraction**	**D- PD-**	S, D	(D+1, D)-(S+1, S)→(D+1, D)	7	○	○	○	○	○	○
F27 P27	**16-bit data subtraction**	**- P-**	S1, S2, D	(S1)-(S2)→(D)	7	○	○	○	○	○	○
F28 P28	**32-bit data subtraction**	**D- PD-**	S1, S2, D	(S1+1, S1)-(S2+1, S2)→(D+1, D)	11	○	○	○	○	○	○
F30 P30	**16-bit data multiplication**	*** P***	S1, S2, D	(S1)X(S2)→(D+1, D)	7	○	○	○	○	○	○
F31 P31	**32-bit data multiplication**	**D* PD***	S1, S2, D	(S1+1, S1)X(S2+1, S2)→(D+3, D+2, D+1, D)	11	○	○	○	○	○	○
F32 P32	**16-bit data division**	**% P%**	S1, S2, D	(S1)÷(S2)→quotient (D) remainder (DT9015)	7	○	○	○	○	○	○
F33 P33	**32-bit data division**	**D% PD%**	S1, S2, D	(S1+1, S1)÷(S2+1, S2)→quotient (D+1, D) remainder (DT9016, DT9015)	11	○	○	○	○	○	○
F34 P34	**16-bit data multiplication (result in 16 bits)**	***W P*W**	S1, S2, D	(S1)X(S2)→(D)	7	×	○	○	○	○	○
F35 P35	**16-bit data increment**	**+1 P+1**	D	(D)+1→(D)	3	○	○	○	○	○	○
F36 P36	**32-bit data increment**	**D+1 PD+1**	D	(D+1, D)+1→(D+1, D)	3	○	○	○	○	○	○
F37 P37	**16-bit data decrement**	**-1 P-1**	D	(D)-1→(D)	3	○	○	○	○	○	○
F38 P38	**32-bit data decrement**	**D-1 PD-1**	D	(D+1, D)-1→(D+1, D)	3	○	○	○	○	○	○
F39 P39	**32-bit data multiplication (result in 32 bits)**	**D*D PD*D**	S1, S2, D	(S1+1, S1)x(S2+1, S2)→(D+1, D)	11	×	○	○	○	○	○

○: Available, ×: Not available, △: Not available partially

Ramco National www.PanasonicSensors.com 1-800-280-6933

Num-ber	Name	Boo-lean	Operand	Description	Steps	FP0/FP-e	FP0R	FPΣ	FP-X	FP2	FP2SH/FP10SH
BCD arithmetic instructions											
F40 P40	**4-digit BCD data addition**	**B+ PB+**	S, D	(D)+(S)→(D)	5	○	○	○	○	○	○
F41 P41	**8-digit BCD data addition**	**DB+ PDB+**	S, D	(D+1, D)+(S+1, S)→(D+1, D)	7	○	○	○	○	○	○
F42 P42	**4-digit BCD data addition**	**B+ PB+**	S1, S2, D	(S1)+(S2)→(D)	7	○	○	○	○	○	○
F43 P43	**8-digit BCD data addition**	**DB+ PDB+**	S1, S2, D	(S1+1, S1)+(S2+1, S2)→(D+1, D)	11	○	○	○	○	○	○
F45 P45	**4-digit BCD data subtraction**	**B- PB-**	S, D	(D)-(S)→(D)	5	○	○	○	○	○	○
F46 P46	**8-digit BCD data subtraction**	**DB- PDB-**	S, D	(D+1, D)-(S+1, S)→(D+1, D)	7	○	○	○	○	○	○
F47 P47	**4-digit BCD data subtraction**	**B- PB-**	S1, S2, D	(S1)-(S2)→(D)	7	○	○	○	○	○	○
F48 P48	**8-digit BCD data subtraction**	**DB- PDB-**	S1, S2, D	(S1+1, S1)-(S2+1, S2)→(D+1, D)	11	○	○	○	○	○	○
F50 P50	**4-digit BCD data multiplication**	**B* PB***	S1, S2, D	(S1)X(S2)→(D+1, D)	7	○	○	○	○	○	○
F51 P51	**8-digit BCD data multiplication**	**DB* PDB***	S1, S2, D	(S1+1, S1)X(S2+1, S2)→(D+3, D+2, D+1, D)	11	○	○	○	○	○	○
F52 P52	**4-digit BCD data division**	**B% PB%**	S1, S2, D	(S1)÷(S2)→quotient (D) remainder (DT9015)	7	○	○	○	○	○	○
F53 P53	**8-digit BCD data division**	**DB% PDB%**	S1, S2, D	(S1+1, S1)÷(S2+1, S2)→quotient (D+1, D) remainder (DT9016, DT9015)	11	○	○	○	○	○	○
F55 P55	**4-digit BCD data increment**	**B+1 PB+1**	D	(D)+1→(D)	3	○	○	○	○	○	○
F56 P56	**8-digit BCD data increment**	**DB+1 PDB+1**	D	(D+1, D)+1→(D+1, D)	3	○	○	○	○	○	○
F57 P57	**4-digit BCD data decrement**	**B-1 PB-1**	D	(D)-1→(D)	3	○	○	○	○	○	○
F58 P58	**8-digit BCD data decrement**	**DB-1 PDB-1**	D	(D+1, D)-1→(D+1, D)	3	○	○	○	○	○	○
Data compare instructions											
F60 P60	**16-bit data compare**	**CMP PCMP**	S1, S2	(S1)>(S2)→R900A: on (S1)=(S2)→R900B: on (S1)<(S2)→R900C: on	5	○	○	○	○	○	○
F61 P61	**32-bit data compare**	**DCMP PDCMP**	S1, S2	(S1+1, S1)>(S2+1, S2)→R900A: on (S1+1, S1)=(S2+1, S2)→R900B: on (S1+1, S1)<(S2+1, S2)→R900C: on	9	○	○	○	○	○	○
F62 P62	**16-bit data band compare**	**WIN PWIN**	S1, S2, S3	(S1)>(S3)→R900A: on (S2)< or=(S1)< or=(S3)→R900B: on (S1)<(S2)→R900C: on	7	○	○	○	○	○	○

○: Available, ×: Not available, △: Not available partially

Ramco National www.PanasonicSensors.com 1-800-280-6933

Number	Name	Boolean	Operand	Description	Steps	FP0/FP-e	FP0R	FPΣ	FP-X	FP2	FP2SH/FP10SH
F63 P63	**32-bit data band compare**	**DWIN PDWIN**	S1, S2, S3	(S1+1, S1)>(S3+1, S3)→R900A: on (S2+1, S2)< or=(S1+1, S1)< or=(S3+1, S3)→R900B: on (S1+1, S1)<(S2+1, S2)→R900C: on	13	○	○	○	○	○	○
F64 P64	**Block data compare**	**BCMP PBCMP**	S1, S2, S3	Compares the two blocks beginning with "S2" and "S3" to see if they are equal.	7	○	○	○	○	○	○
Logic operation instructions											
F65 P65	**16-bit data AND**	**WAN PWAN**	S1, S2, D	(S1) AND (S2)→(D)	7	○	○	○	○	○	○
F66 P66	**16-bit data OR**	**WOR PWOR**	S1, S2, D	(S1) OR (S2)→(D)	7	○	○	○	○	○	○
F67 P67	**16-bit data exclusive OR**	**XOR PXOR**	S1, S2, D	{(S1) AND $\overline{(S2)}$} OR {$\overline{(S1)}$ AND (S2)}→(D)	7	○	○	○	○	○	○
F68 P68	**16-bit data exclusive NOR**	**XNR PXNR**	S1, S2, D	{(S1) AND (S2)} OR {$\overline{(S1)}$ AND $\overline{(S2)}$}→(D)	7	○	○	○	○	○	○
F69 P69	**16-bit data unite**	**WUNI PWUNI**	S1, S2, S3, D	([S1] AND [S3]) OR ([S2] AND $\overline{[S3]}$)→(D) When (S3) is H0, (S2)→(D) When (S3) is HFFFF, (S1) →(D)	9	×	○	○	○	○	○
Data conversion instructions											
F70 P70	**Block check code calculation**	**BCC PBCC**	S1, S2, S3, D	Creates the code for checking the data specified by "S2" and "S3" and stores it in "D". The calculation method is specified by "S1".	9	○	○	○	○	○	○
F71 P71	**Hexadecimal data → ASCII code**	**HEXA PHEXA**	S1, S2, D	Converts the hexadecimal data specified by "S1" and "S2" to ASCII code and stores it in "D". Example: HABCD→ H 42 41 44 43 B A D C	7	○	○	○	○	○	○
F72 P72	**ASCII code → Hexadecimal data**	**AHEX PAHEX**	S1, S2, D	Converts the ASCII code specified by "S1" and "S2" to hexadecimal data and stores it in "D". Example: H 44 43 42 41 → HCDAB D C B A	7	○	○	○	○	○	○
F73 P73	**4-digit BCD data → ASCII code**	**BCDA PBCDA**	S1, S2, D	Converts the four digits of BCD data specified by "S1" and "S2" to ASCII code and stores it in "D". Example: H1234→ H 32 31 34 33 2 1 4 3	7	○	○	○	○	○	○
F74 P74	**ASCII code → 4-digit BCD data**	**ABCD PABCD**	S1, S2, D	Converts the ASCII code specified by "S1" and "S2" to four digits of BCD data and stores it in "D". Example: H 34 33 32 31 → H3412 4 3 2 1	9	○	○	○	○	○	○
F75 P75	**16-bit binary data → ASCII code**	**BINA PBINA**	S1, S2, D	Converts the 16 bits of binary data specified by "S1" to ASCII code and stores it in "D" (area of "S2" bytes). Example: K-100→ H 30 30 31 2D 20 20 0 0 1 -	7	○	○	○	○	○	○

○: Available, ×: Not available, △: Not available partially

Ramco National www.PanasonicSensors.com 1-800-280-6933

Num-ber	Name	Boolean	Ope-rand	Description	Steps	FP0/FP-e	FP0R	FPΣ	FP-X	FP2	FP2SH/FP10SH
F76 P76	**ASCII code → 16-bit binary data**	**ABIN PABIN**	S1, S2, D	Converts the ASCII code specified by "S1" and "S2" to 16 bits of binary data and stores it in "D". Example: H 30 30 31 2D 20 20 → K-100 (0 0 1 -)	7	○	○	○	○	○	○
F77 P77	**32-bit binary data → ASCII code**	**DBIA PDBIA**	S1, S2, D	Converts the 32 bits of binary data (S1+1, S1) to ASCII code and stores it in D (area of "S2" bytes).	11	○	○	○	○	○	○
F78 P78	**ASCII code → 32-bit binary data**	**DABI PDABI**	S1, S2, D	Converts the ASCII code specified by "S1" and "S2" to 32 bits of binary data and stores it in (D+1, D).	11	○	○	○	○	○	○
F80 P80	**16-bit binary data → 4-digit BCD data**	**BCD PBCD**	S, D	Converts the 16 bits of binary data specified by "S" to four digits of BCD data and stores it in "D". Example: K100 → H100	5	○	○	○	○	○	○
F81 P81	**4-digit BCD data → 16-bit binary data**	**BIN PBIN**	S, D	Converts the four digits of BCD data specified by "S" to 16 bits of binary data and stores it in "D". Example: H100 → K100	5	○	○	○	○	○	○
F82 P82	**32-bit binary data → 8-digit BCD data**	**DBCD PDBCD**	S, D	Converts the 32 bits of binary data specified by (S+1, S) to eight digits of BCD data and stores it in (D+1, D).	7	○	○	○	○	○	○
F83 P83	**8-digit BCD data → 32-bit binary data**	**DBIN PDBIN**	S, D	Converts the eight digits of BCD data specified by (S+1, S) to 32 bits of binary data and stores it in (D+1, D).	7	○	○	○	○	○	○
F84 P84	**16-bit data invert (com-plement of 1)**	**INV PINV**	D	Inverts each bit of data of "D".	3	○	○	○	○	○	○
F85 P85	**16-bit data complement of 2**	**NEG PNEG**	D	Inverts each bit of data of "D" and adds 1 (inverts the sign).	3	○	○	○	○	○	○
F86 P86	**32-bit data complement of 2**	**DNEG PDNEG**	D	Inverts each bit of data of (D+1, D) and adds 1 (inverts the sign).	3	○	○	○	○	○	○
F87 P87	**16-bit data absolute**	**ABS PABS**	D	Gives the absolute value of the data of "D".	3	○	○	○	○	○	○
F88 P88	**32-bit data absolute**	**DABS PDABS**	D	Gives the absolute value of the data of (D+1, D).	3	○	○	○	○	○	○
F89 P89	**16-bit data sign extension**	**EXT PEXT**	D	Extends the 16 bits of data in "D" to 32 bits in (D+1, D).	3	○	○	○	○	○	○
F90 P90	**Decode**	**DECO PDECO**	S, n, D	Decodes part of the data of "S" and stores it in "D". The part is specified by "n".	7	○	○	○	○	○	○
F91 P91	**7-segment decode**	**SEGT PSEGT**	S, D	Converts the data of "S" for use in a 7-segment display and stores it in (D+1, D).	5	○	○	○	○	○	○
F92 P92	**Encode**	**ENCO PENCO**	S, n, D	Encodes part of the data of "S" and stores it in "D". The part is specified by "n".	7	○	○	○	○	○	○
F93 P93	**16-bit data combine**	**UNIT PUNIT**	S, n, D	The least significant digit of each of the "n" words of data beginning at "S" are stored (united) in order in "D".	7	○	○	○	○	○	○

○: Available, ×: Not available, △: Not available partially

Ramco National www.PanasonicSensors.com 1-800-280-6933

Num-ber	Name	Boo-lean	Ope-rand	Description	Steps	FP0/FP-e	FP0R	FPΣ	FP-X	FP2	FP2SH/FP10SH
F94 P94	**16-bit data distribute**	**DIST PDIST**	S, n, D	Each of the digits of the data of "S" are stored in (distributed to) the least significant digits of the areas beginning at "D".	7	○	○	○	○	○	○
F95 P95	**Character→ ASCII code**	**ASC PASC**	S, D	Twelve characters of the character constants of "S" are converted to ASCII code and stored in "D" to "D+5".	15	○	○	○	○	○	○
F96 P96	**16-bit table data search**	**SRC PSRC**	S1, S2, S3	The data of "S1" is searched for in the areas in the range "S2" to "S3" and the result is stored in DT9037 and DT9038	7	○	○	○	○	○	○
F97 P97	**32-bit table data search**	**DSRC PDSRC**	S1, S2, S3	The data of (S1+1, S1) is searched for in the 32-bit data designated by "S3", beginning from "S2", and the result if stored in DT90037 and DT90038.	11	×	○	○	○	○	○
Data shift instructions											
F98 P98	**Data table shift-out and compress**	**CMPR PCMPR**	D1, D2, D3	Transfer "D2" to "D3". Any parts of the data between "D1" and "D2" that are 0 are compressed, and shifted in order toward "D2".	7	×	○	○	○	○	○
F99 P99	**Data table shift-in and compress**	**CMPW PCMPW**	S, D1, D2	Transfer "S" to "D1". Any parts of the data between "D1" and "D2" that are 0 are compressed, and shifted in order toward "D2".	7	×	○	○	○	○	○
F100 P100	**Right shift of multiple bits (n bits) in a 16-bit data**	**SHR PSHR**	D, n	Shifts the "n" bits of "D" to the right.	5	○	○	○	○	○	○
F101 P101	**Left shift of multiple bits (n bits) in a 16-bit data**	**SHL PSHL**	D, n	Shifts the "n" bits of "D" to the left.	5	○	○	○	○	○	○
F102 P102	**Right shift of n bits in a 32-bit data**	**DSHR PDSHR**	D, n	Shifts the "n" bits of the 32-bit data area specified by (D+1, D) to the right.	5	×	○	○	○	○	○
F103 P103	**Left shift of n bits in a 32-bit data**	**DSHL PDSHL**	D, n	Shifts the "n" bits of the 32-bit data area specified by (D+1, D) to the left.	5	×	○	○	○	○	○
F105 P105	**Right shift of one hexadecimal digit (4-bit)**	**BSR PBSR**	D	Shifts the one digit of data of "D" to the right.	3	○	○	○	○	○	○
F106 P106	**Left shift of one hexadecimal digit (4-bit)**	**BSL PBSL**	D	Shifts the one digit of data of "D" to the left.	3	○	○	○	○	○	○
F108 P108	**Right shift of multiple bits (n bits)**	**BITR PBITR**	D1, D2, n	Shifts the "n" bits of data range by "D1" and "D2" to the right.	7	×	○	○	○	○	○
F109 P109	**Left shift of multiple bits (n bits)**	**BITL PBITL**	D1, D2, n	Shifts the "n" bits of data range by "D1" and "D2" to the left.	7	×	○	○	○	○	○
F110 P110	**Right shift of one word (16-bit)**	**WSHR PWSHR**	D1, D2	Shifts the one word of the areas by "D1" and "D2" to the right.	5	○	○	○	○	○	○
F111 P111	**Left shift of one word (16-bit)**	**WSHL PWSHL**	D1, D2	Shifts the one word of the areas by "D1" and "D2" to the left.	5	○	○	○	○	○	○
F112 P112	**Right shift of one hexadecimal digit (4-bit)**	**WBSR PWBSR**	D1, D2	Shifts the one digit of the areas by "D1" and "D2" to the right.	5	○	○	○	○	○	○
F113 P113	**Left shift of one hexadecimal digit (4-bit)**	**WBSL PWBSL**	D1, D2	Shifts the one digit of the areas by "D1" and "D2" to the left.	5	○	○	○	○	○	○

○: Available, ×: Not available, △: Not available partially

Ramco National www.PanasonicSensors.com 1-800-280-6933

Num -ber	Name	Boolean	Ope- rand	Description	Steps	FP0/FP-e	FP0R	FPΣ	FP-X	FP2	FP2SH/FP10SH
FIFO instructions											
F115 P115	**FIFO buffer define**	**FIFT PFIFT**	n, D	The “n” words beginning from “D” are defined in the buffer.	5	×	○	○	○	○	○
F116 P116	**Data read from FIFO buffer**	**FIFR PFIFR**	S, D	The oldest data beginning from “S” that was written to the buffer is read and stored in “D”.	5	×	○	○	○	○	○
F117 P117	**Data write into FIFO buffer**	**FIFW PFIFW**	S, D	The data of “S” is written to the buffer starting from “D”.	5	×	○	○	○	○	○
Basic function instructions											
F118	**UP/DOWN counter**	**UDC**	S, D	Counts up or down from the value preset in “S” and stores the elapsed value in “D”.	5	○	○	○	○	○	○
F119	**Left/right shift register**	**LRSR**	D1, D2	Shifts one bit to the left or right with the area between “D1” and “D2” as the register.	5	○	○	○	○	○	○
Data rotate instructions											
F120 P120	**16-bit data right rotate**	**ROR PROR**	D, n	Rotates the “n” bits in data of “D” to the right.	5	○	○	○	○	○	○
F121 P121	**16-bit data left rotate**	**ROL PROL**	D, n	Rotates the “n” bits in data of “D” to the left.	5	○	○	○	○	○	○
F122 P122	**16-bit data right rotate with carry flag (R9009) data**	**RCR PRCR**	D, n	Rotates the “n” bits in 17-bit area consisting of “D” plus the carry flag (R9009) data to the right.	5	○	○	○	○	○	○
F123 P123	**16-bit data left rotate with carry flag (R9009) data**	**RCL PRCL**	D, n	Rotates the “n” bits in 17-bit area consisting of “D” plus the carry flag (R9009) data to the left.	5	○	○	○	○	○	○
F125 P125	**32-bit data right rotate**	**DROR PDROR**	D, n	Rotates the number of bits specified by “n” of the double words data (32 bits) specified by (D+1, D) to the right.	5	×	○	○	○	○	○
F126 P126	**32-bit data left rotate**	**DROL PDROL**	D, n	Rotates the number of bits specified by “n” of the double words data (32 bits) specified by (D+1, D) to the left.	5	×	○	○	○	○	○
F127 P127	**32-bit data right rotate with carry flag (R9009) data**	**DRCR PDRCR**	D, n	Rotates the number of bits specified by “n” of the double words data (32 bits) specified by (D+1, D) to the right together with carry flag (R9009) data.	5	×	○	○	○	○	○
F128 P128	**32-bit data left rotate with carry flag (R9009) data**	**DRCL PDRCL**	D, n	Rotates the number of bits specified by “n” of the double words data (32 bits) specified by (D+1, D) to the left together with carry flag (R9009) data.	5	×	○	○	○	○	○
Bit manipulation instructions											
F130 P130	**16-bit data bit set**	**BTS PBTS**	D, n	Sets the value of bit position “n” of the data of “D” to 1.	5	○	○	○	○	○	○
F131 P131	**16-bit data bit reset**	**BTR PBTR**	D, n	Sets the value of bit position “n” of the data of “D” to 0.	5	○	○	○	○	○	○
F132 P132	**16-bit data invert**	**BTI PBTI**	D, n	Inverts the value of bit position “n” of the data of “D”.	5	○	○	○	○	○	○
F133 P133	**16-bit data bit test**	**BTT PBTT**	D, n	Tests the value of bit position “n” of the data of “D” and outputs the result to R900B.	5	○	○	○	○	○	○
F135 P135	**Number of on (1) bits in 16-bit data**	**BCU PBCU**	S, D	Stores the number of on bits in the data of “S” in “D”.	5	○	○	○	○	○	○
F136 P136	**Number of on (1) bits in 32-bit data**	**DBCU PDBCU**	S, D	Stores the number of on bits in the data of (S+1, S) in “D”.	7	○	○	○	○	○	○

○: Available, ×: Not available, △: Not available partially

Ramco National www.PanasonicSensors.com 1-800-280-6933

Number	Name	Boolean	Operand	Description	Steps	FP0/FP-e	FP0R	FPΣ	FP-X	FP2	FP2SH/FP10SH
Basic function instruction											
F137	**Auxiliary timer (16-bit)**	**STMR**	S, D	Turns on the specified output and R900D after 0.01 s × set value.	5	○	○	○	○	○	○
Special instructions											
F138 P138	**Hours, minutes and seconds to seconds data**	**HMSS PHMSS**	S, D	Converts the hour, minute and second data of (S+1, S) to seconds data, and the converted data is stored in (D+1, D).	5	△ *1	○	○	○	○	○
F139 P139	**Seconds to hours, minutes and seconds data**	**SHMS PSHMS**	S, D	Converts the seconds data of (S+1, S) to hour, minute and second data, and the converted data is stored in (D+1, D).	5	△ *1	○	○	○	○	○
F140 P140	**Carry flag (R9009) set**	**STC PSTC**	-	Turns on the carry flag (R9009).	1	○	○	○	○	○	○
F141 P141	**Carry flag (R9009) reset**	**CLC PCLC**	-	Turns off the carry flag (R9009).	1	○	○	○	○	○	○
F142 P142	**Watching dog timer update**	**WDT PWDT**	S	The time (allowable scan time for the system) of watching dog timer is changed to "S" × 0.1 (ms) for that scan.	3	×	×	×	×	×	○
F143 P143	**Partial I/O update**	**IORF PIORF**	D1, D2	Updates the I/O from the number specified by "D1" to the number specified by "D2".	5	○	○	○	○	○	○
F144	**Serial data communication control**	**TRNS**	S, n	The COM port received flag (R9038) is set to off to enable reception. Beginning at "S", "n" bytes of the data registers are sent from the COM port.	5	○ *2	×	×	×	○	○
F145 P145	**Data send**	**SEND PSEND**	S1, S2, D, N	Sends the data to another station in the network (MEWNET). (via link unit)	9	×	×	×	×	○	○
F146 P146	**Data receive**	**RECV PRECV**	S1, S2, N, D	Receives the data to another station in the network (MEWNET). (via link unit)	9	×	×	×	×	○	○
F145 P145	**Data send**	**SEND**	S1, S2, D, N	Sends the data to the slave station as the MOD bus master. (via COM port)	9	×	○	△ *3	○	×	×
F146 P146	**Data receive**	**RECV**	S1, S2, N, D	Receives the data from the slave station as the MOD bus master. (via COM port)	9	×	○	△ *3	○	×	×
F145 P145	**Data send**	**SEND**	S1, S2, D, N	Sends the data to the slave station of the MOD bus master, type II.	9	×	○	△ *4	△ *4	×	×
F146 P146	**Data receive**	**RECV**	S1, S2, N, D	Receives the data from the slave station of the MOD bus master, type II.	9	×	○	△ *4	△ *4	×	×
F145 P145	**Data send**	**SEND**	S1, S2, D, N	Sends the data to the slave station as the MEWTOCOL master. (via COM port)	9	×	○	△ *3	△ *3	×	×
F146 P146	**Data receive**	**RECV**	S1, S2, N, D	Receives the data from the slave station as the MEWTOCOL master. (via COM port)	9	×	○	△ *3	△ *3	×	×
F147	**Printout**	**PR**	S, D	Converts the ASCII code data in the area starting with "S" for printing, and outputs it to the word external output relay WY specified by "D".	5	○	○	○	○	○	○
F148 P148	**Self-diagnostic error set**	**ERR PERR**	n (n: k100 to K299)	Stores the self-diagnostic error number "n" in (DT9000), turns R9000 on, and turns on the ERROR LED.	3	○	○	○	○	○	○
F149 P149	**Message display**	**MSG PMSG**	S	Displays the character constant of "S" in the connected programming tool.	13	○	○	○	○	○	○

○: Available, ×: Not available, △: Not available partially

*1) The instruction is available for FP0 T32 (V2.3 or later) and FP-e.

*2) This instruction is available for FP0 V1.20 or later and FP-e.

*3) This instruction is available for FP-X V1.20 or later and FPΣ 32k type.

*4) This instruction is available for FP-X V2.50 or later and FPΣ V3.20 or later.s

Ramco National www.PanasonicSensors.com 1-800-280-6933

Num-ber	Name	Boolean	Ope-rand	Description	Steps	FP0/FP-e	FP0R	FPΣ	FP-X	FP2	FP2SH/FP10SH
F150 P150	**Data read from intelligent unit**	**READ PREAD**	S1, S2, n, D	Reads the data from the intelligent unit.	9	×	×	△ *3	×	○	○
F151 P151	**Data write into intelligent unit**	**WRT PWRT**	S1, S2, n, D	Writes the data into the intelligent unit.	9	×	×	△ *3	×	○	○
F152 P152	**Data read from MEWNET-F slave station**	**RMRD PRMRD**	S1, S2, n, D	Reads the data from the intelligent unit at the MEWNET-F (remote I/O) slave station.	9	×	×	×	×	○	○
F153 P153	**Data write into MEWNET-F slave station**	**RMWT PRMWT**	S1, S2, n, D	Writes the data into the intelligent unit at the MEWNET-F (remote I/O) slave station.	9	×	×	×	×	○	○
F155 P155	**Sampling**	**SMPL PSMPL**	-	Starts sampling data.	1	×	○	△ *5	△ *4	○	○
F156 P156	**Sampling trigger**	**STRG PSTRG**	-	When the trigger of this instruction turns on, the sampling trace stops.	1	×	○	△ *5	△ *4	○	○
F157 P157	**Time addition**	**CADD PCADD**	S1, S2, D	The time after (S2+1, S2) elapses from the time of (S1+2, S1+1, S1) is stored in (D+2, D+1, D).	9	△ *1	○	○	○	○	○
F158 P158	**Time subtraction**	**CSUB PCSUB**	S1, S2, D	The time that results from subtracting (S2+1, S2) from the time (S1+2, S1+1, S1) is stored in (D+2, D+1, D).	9	△ *1	○	○	○	○	○
F159 P159	**Serial port communication**	**MTRN PMTRN**	S, n, D	This is used to send data to an external device through the specified CPU COM port or MCU COM port.	7	×	○	○	○	△ *2	△ *2
F161 P161	**MCU serial port reception**	**MRCV PMRCV**	S, D1, D2	Data is received from external equipment via the COM port of the specified MCU.	7	×	×	×	×	△ *2	△ *2
BIN arithmetic instruction											
F160 P160	**Double word (32-bit) data square root**	**DSQR PDSQR**	S, D	$\sqrt{(S)}\rightarrow(D)$	7	×	○	○	○	○	○
High speed counter/Pulse output instruction for FP0, FP-e											
F0	**High-speed counter and Pulse output controls**	**MV**	S, DT9052	Performs high-speed counter and Pulse output controls according to the control code specified by "S". The control code is stored in DT9052.	5	○					
F1	**Change and read of the elapsed value of high-speed counter and Pulse output**	**DMV**	S, DT9044	Transfers (S+1, S) to high-speed counter and Pulse output elapsed value area.	7	○					
			DT9044, D	Transfers value in high-speed counter and Pulse output elapsed value area to (D+1, D).	7	○					
F166	**High-speed counter output set (with channel specification)**	**HC1S**	n, S, Yn	Turns output Yn on when the elapsed value of the built-in high-speed counter reaches the target value of (S+1, S).	11	○					

○: Available, ×: Not available, △: Not available partially

*1) The instruction is available for FP0 T32 (V2.3 or later) and FP-e.

*2) The instruction is available for FP2/FP2SH Ver. 1.5 or later, and the pulse execution type can be specified. FP10SH cannot be used.

*3) This instruction is available for FPΣ Ver. 2.0 or later.

*4) This instruction is only available for FP-X Ver.2.0 or later.

*5) This instruction is available for FPΣ Ver. 3.10 or later.

Ramco National www.PanasonicSensors.com 1-800-280-6933

Num-ber	Name	Boo-lean	Operand	Description	Steps	FP0/FP-e	FP0R	FPΣ	FP-X	FP2	FP2SH/FP10SH
F167	**High-speed counter output reset (with channel specification)**	**HC1R**	n, S, Yn	Turns output Yn off when the elapsed value of the built-in high-speed counter reaches the target value of (S+1, S).	11	○					
F168	**Positioning control (with channel specification)**	**SPD1**	S, n	Outputs a positioning pulse from the specified output (Y0 or Y1) according to the contents of the data table beginning at "S".	5	○					
F169	**Pulse output (with channel specification)**	**PLS**	S, n	Outputs a pulse from the specified output (Y0 or Y1) according to the contents of the data table beginning at "S".	5	○					
F170	**PWM output (with channel specification)**	**PWM**	S, n	Performs PWM output from the specified output (Y0 or Y1) according to the contents of the data table beginning at "S".	5	○					
High speed counter/Pulse output instruction for FP0R											
F0	**High-speed counter and Pulse output controls**	**MV**	S, DT90052	Performs high-speed counter and Pulse output controls according to the control code specified by "S". The control code is stored in DT90052.	5		○				
F1	**Change and read of the elapsed value of high-speed counter and Pulse output**	**DMV**	S, DT90300	Transfers (S+1, S) to high-speed counter and Pulse output elapsed value area (DT90045, DT90044).	7		○				
			DT90300, D	Transfers value in high-speed counter and Pulse output elapsed value area (DT90045, DT90044) to (D+1, D).	7		○				
F165	**Cam control**	**CAM0**	S	Controls cam operation (on/off patterns of each cam output) according to the elapsed value of the high-speed counter.	3		○				
F166	**Target value much on (with channel specification) (High-speed counter control/Pulse output control)**	**HC1S**	n, S, D	Turns output Yn on when the elapsed value of the high-speed counter or pulse output reaches the target value of (S+1, S).	11		○				
F167	**Target value much off (with channel specification) (High-speed counter control/Pulse output control)**	**HC1R**	n, S, D	Turns output Yn off when the elapsed value of the high-speed counter or pulse output reaches the target value of (S+1, S).	11		○				
F171	**Pulse output (JOG positioning type 0/1) (Trapezoidal control)**	**SPDH**	S, n	Positioning pulses are output from the specified channel, in accordance with the contents of the data table that starts with S.	5		○				
F172	**Pulse output (JOG operation 0 and 1)**	**PLSH**	S, n	Pulse strings are output from the specified output, in accordance with the contents of the data table that starts with S.	5		○				
F173	**PWM output (with channel specification)**	**PWMH**	S, n	PWM output is output from the specified output, in accordance with the contents of the data table that starts with S.	5		○				

Ramco National www.PanasonicSensors.com 1-800-280-6933

Num-ber	Name	Boolean	Operand	Description	Steps	FP0/FP-e	FP0R	FPΣ	FP-X	FP2	FP2SH/FP10SH
F174	**Pulse output (Selectable data table control operation)**	**SP0H**	S, n	Outputs the pulses from the specified channel according to the data table specified by S.	5		○				
F175	**Pulse output (Linear interpolation)**	**SPSH**	S, n	Pulses are output from channel, in accordance with the designated data table, so that the path to the target position forms a straight line.	5		○				
F176	**Pulse output (Circular interpolation)**	**SPCH**	S, n	Pulses are output from channel, in accordance with the designated data table, so that the path to the target position forms an arc.	5		×				
F177	**Pulse output (Home return)**	**HOME**	S, n	Performs the home return according to the specified data table.	7		○				
F178	**Input pulse measurement (No. of pulses, cycle for input pulses)**	**PLSM**	S1, S2, D	Measures the number of pulses and cycle of pulses to be input to the high-speed counter of the specified channel.	5		○				

Ramco National www.PanasonicSensors.com 1-800-280-6933

Num-ber	Name	Boo-lean	Operand	Description	Steps	FP0/FP-e	FP0R	FPΣ	FP-X	FP2	FP2SH/FP10SH
High speed counter/Pulse output instruction for FPΣ/FP-X											
F0	**High-speed counter and Pulse output controls**	**MV**	S, DT90052	Performs high-speed counter and Pulse output controls according to the control code specified by "S". The control code is stored in DT90052.	5			○	○		
F1	**Change and read of the elapsed value of high-speed counter and Pulse output**	**DMV**	FPΣ: S, DT90044 FP-X: S, DT90300	Transfers (S+1, S) to high-speed counter and Pulse output elapsed value area (DT90045, DT90044).	7			○	○		
			FPΣ: DT90044, D FP-X: DT90300, D	Transfers value in high-speed counter and Pulse output elapsed value area (DT90045, DT90044) to (D+1, D).	7			○	○		
F166	**Target value much on (with channel specification)**	**HC1S**	n, S, D	Turns output Yn on when the elapsed value of the built-in high-speed counter reaches the target value of (S+1, S).	11			○	○		
F167	**Target value much off (with channel specification)**	**HC1R**	n, S, D	Turns output Yn off when the elapsed value of the built-in high-speed counter reaches the target value of (S+1, S).	11			○	○		
F171	**Pulse output (with channel specification) (Trapezoidal control and home return)**	**SPDH**	S, n	Positioning pulses are output from the specified channel, in accordance with the contents of the data table that starts with S.	5			○	○		
F172	**Pulse output (with channel specification) (JOG operation)**	**PLSH**	S, n	Pulse strings are output from the specified output, in accordance with the contents of the data table that starts with S.	5			○	○		
F173	**PWM output (with channel specification)**	**PWMH**	S, n	PWM output is output from the specified output, in accordance with the contents of the data table that starts with S.	5			○	○		
F174	**Pulse output (with channel specification) (Selectable data table control operation)**	**SP0H**	S, n	Outputs the pulses from the specified channel according to the data table specified by S.	5			○	○		
F175	**Pulse output (Linear interpolation)**	**SPSH**	S, n	Pulses are output from channel, in accordance with the designated data table, so that the path to the target position forms a straight line.	5			△ *2	○		
F176	**Pulse output (Circular interpolation)**	**SPCH**	S, n	Pulses are output from channel, in accordance with the designated data table, so that the path to the target position forms an arc.	5			△ *2	×		

○: Available, ×: Not available, △: Not available partially

*1) The elapsed value area differs depending on used channels.

*2) This instruction is available for FPΣ C32T2, C28P2, C32T2H and C28P2H.

Ramco National www.PanasonicSensors.com 1-800-280-6933

Num -ber	Name	Boolean	Ope- rand	Description	Steps	FP0/FP-e	FP0R	FPΣ	FP-X	FP2	FP2SH/FP10SH
Screen display instructions											
F180	**FP-e screen display registration**	**SCR**	S1, S2, S3, S4	Register the screen displayed on the FP-e.	9	△ *1	×	×	×	×	×
F181	**FP-e screen display switching**	**DSP**	S	Specify the screen to be displayed on the FP-e.	3	△ *1	×	×	×	×	×
Basic function instruction											
F182	**Time constant processing**	**FILTR**	S1, S2, S3, D	Executes the filter processing for the specified input.	9	×	○	△ *2	△ *3	×	×
F183	**Auxiliary timer (32-bit)**	**DSTM**	S, D	Turn on the specified output and R900D after 0.01 s. × set value.	7	○	○	○	○	○	△ *4
Data transfer instructions											
F190 P190	**Three 16-bit data move**	**MV3 PMV3**	S1, S2, S3, D	(S1)→(D), (S2)→(D+1), (S3)→(D+2)	10	×	○	○	○	○	○
F191 P191	**Three 32-bit data move**	**DMV3 PDMV3**	S1, S2, S3, D	(S1+1, S1)→(D+1, D), (S2+1, S2)→(D+3, D+2), (S3+1, S3)→(D+5, D+4)	16	×	○	○	○	○	○
Logic operation instructions											
F215 P215	**32-bit data AND**	**DAND PDAND**	S1, S2, D	(S1+1, S1) AND (S2+1, S2)→(D+1, D)	7	×	○	○	○	○	○
F216 P216	**32-bit data OR**	**DOR PDOR**	S1, S2, D	(S1+1, S1) OR (S2+1, S2)→(D+1, D)	12	×	○	○	○	○	○
F217 P217	**32-bit data XOR**	**DXOR PDXOR**	S1, S2, D	{(S1+1, S1) AND (S2+1, S2)} OR {(S1+1, S1) AND (S2+1, S2)}→(D+1, D)	12	×	○	○	○	○	○
F218 P218	**32-bit data XNR**	**DXNR PDXNR**	S1, S2, D	{(S1+1, S1) AND (S2+1, S2)} OR {(S1+1, S1) AND (S2+1, S2)}→(D+1, D)	12	×	○	○	○	○	○
F219 P219	**Double word (32-bit) data unites**	**DUNI PDUNI**	S1, S2, S3, D	{(S1+1, S1) AND (S3+1, S3)} OR {(S2+1, S2) AND (S3+1, S3)}→(D+1, D)	16	×	○	○	○	○	○
Data conversion instructions											
F230 P230	**Time data → second conversion**	**TMSEC PTMSEC**	S, D	The specified time data (a date and time) is changed to the second data.	6	×	○	△ *5	△ *6	△ *7	△ *7
F231 P231	**Second data→ time conversion**	**SECTM PSECTM**	S, D	The specified second data is changed into time data (a date and time).	6	×	○	△ *5	△ *6	△ *7	△ *7

○: Available, ×: Not available, △: Not available partially

*1) This instruction is available for FP-e only.

*2) This instruction is available for FPΣ Ver. 3.10 or later.

*3) This instruction is only available for FP-X Ver.2.0 or later.

*4) This instruction is available for FP10SH Ver. 3.10 or later.

*5) This instruction is available for FPΣ 32k type.

*6) This instruction is available for FP-X Ver. 1.13 or later.

*7) This instruction is available for FP2/FP2SH Ver. 1.5 or later.FP10SH cannot be used.

Ramco National www.PanasonicSensors.com 1-800-280-6933

Num-ber	Name	Boolean	Ope-rand	Description	Steps	FP0/FP-e	FP0R	FPΣ	FP-X	FP2	FP2SH/FP10SH
F235 P235	**16-bit binary data → Gray code conversion**	**GRY PGRY**	S, D	Converts the 16-bit binary data of "S" to gray codes, and the converted result is stored in the "D".	6	×	○	○	○	○	○
F236 P236	**32-bit binary data → Gray code conversion**	**DGRY PDGRY**	S, D	Converts the 32-bit binary data of (S+1, S) to gray code, and the converted result is stored in the (D+1, D).	8	×	○	○	○	○	○
F237 P237	**16-bit gray code → binary data conversion**	**GBIN PGBIN**	S, D	Converts the gray codes of "S" to binary data, and the converted result is stored in the "D".	6	×	○	○	○	○	○
F238 P238	**32-bit gray code → binary data conversion**	**DGBIN PDGBIN**	S, D	Converts the gray codes of (S+1, S) to binary data, and the converted result is stored in the (D+1, D).	8	×	○	○	○	○	○
F240 P240	**Bit line to bit column conversion**	**COLM PCOLM**	S, n, D	The values of bits 0 to 15 of "S" are stored in bit "n" of (D to DC+15).	8	×	○	○	○	○	○
F241 P241	**Bit column to bit line conversion**	**LINE PLINE**	S, n, D	The values of bit "n" of (S) to (S+15) are stored in bits 0 to 15 of "D".	8	×	○	○	○	○	○
F250	**Binary data → ASCII conversion**	**BTOA**	S1, S2, n, D	Converts multiple binary data to multiple ASCII data.	12	×	○	△ *1	○	×	×
F251	**ASCII → binary data conversion**	**ATOB**	S1, S2, n, D	Converts multiple ASCII data to multiple binary data.	12	×	○	△ *1	○	×	×
F252	**ASCII data check**	**ACHK**	S1, S2, n	Checks the ASCII data strings to be used in F251 (ATOB) instruction.	10	×	○	△ *2	△ *3	×	×
Character strings instructions											
F257 P257	**Comparing character strings**	**SCMP**	S1, S2	These instructions compare two specified character strings and output the judgment results to a special internal relay.	10	×	○	○	○	○	○
F258 P258	**Character string coupling**	**SADD**	S1, S2, D	These instructions couple one character string with another.	12	×	○	○	○	○	○
F259 P259	**Number of characters in a character string**	**LEN**	S, D	These instructions determine the number of characters in a character string.	6	×	○	○	○	○	○
F260 P260	**Search for character string**	**SSRC**	S1, S2, D	The specified character is searched in a character string.	10	×	○	○	○	○	○
F261 P261	**Retrieving data from character strings (right side)**	**RIGHT**	S1, S2, D	These instructions retrieve a specified number of characters from the right side of the character string.	8	×	○	○	○	○	○
F262 P262	**Retrieving data from character strings (left side)**	**LEFT**	S1, S2, D	These instructions retrieve a specified number of characters from the left side of the character string.	8	×	○	○	○	○	○
F263 P263	**Retrieving a character string from a character string**	**MIDR**	S1, S2, S3, D	These instructions retrieve a character string consisting of a specified number of characters from the specified position in the character string.	10	×	○	○	○	○	○
F264 P264	**Writing a character string to a character string**	**MIDW**	S1, S2, D, n	These instructions write a specified number of characters from a character string to a specified position in the character string.	12	×	○	○	○	○	○
F265 P265	**Replacing character strings**	**SREP**	S, D, p, n	A specified number of characters in a character string are rewritten, starting from a specified position in the character string.	12	×	○	○	○	○	○

○: Available, ×: Not available, △: Not available partially

*1) This instruction is available for FPΣ 32k type.

*2) This instruction is available for FPΣ Ver. 3.10 or later.

*3) This instruction is only available for FP-X Ver.2.0 or later.

Ramco National www.PanasonicSensors.com 1-800-280-6933

Num-ber	Name	Boolean	Ope-rand	Description	Steps	FP0/FP-e	FP0R	FPΣ	FP-X	FP2	FP2SH/FP10SH
Integer type data processing instructions											
F270 P270	**Maximum value (word data (16-bit))**	**MAX PMAX**	S1, S2, D	Searches the maximum value in the word data table between the “S1” and “S2”, and stores it in the “D”. The address relative to “S1” is stored in “D+1”.	8	△ *1	○	○	○	○	○
F271 P271	**Maximum value (double word data (32-bit))**	**DMAX PDMAX**	S1, S2, D	Searches for the maximum value in the double word data table between the area selected with “S1” and “S2”, and stores it in the “D”. The address relative to “S1” is stored in “D+2”.	8	△ *1	○	○	○	○	○
F272 P272	**Minimum value (word data (16-bit))**	**MIN PMIN**	S1, S2, D	Searches for the minimum value in the word data table between the area selected with “S1” and “S2”, and stores it in the “D”. The address relative to “S1” is stored in “D+1”.	8	△ *1	○	○	○	○	○
F273 P273	**Minimum value (double word data (32-bit))**	**DMIN PDMIN**	S1, S2, D	Searches for the minimum value in the double word data table between the area selected with “S1” and “S2”, and stores it in the “D”. The address relative to “S1” is stored in “D+2”.	8	△ *1	○	○	○	○	○
F275 P275	**Total and mean values (word data (16-bit))**	**MEAN PMEAN**	S1, S2, D	The total value and the mean value of the word data with sign from the area selected with “S1” to “S2” are obtained and stored in the “D”.	8	△ *1	○	○	○	○	○
F276 P276	**Total and mean values (double word data (32-bit))**	**DMEAN PDMEAN**	S1, S2, D	The total value and the mean value of the double word data with sign from the area selected with “S1” to “S2” are obtained and stored in the “D”.	8	△ *1	○	○	○	○	○
F277 P277	**Sort (word data (16-bit))**	**SORT PSORT**	S1, S2, S3	The word data with sign from the area specified by “S1” to “S2” are sorted in ascending order (the smallest word is first) or descending order (the largest word is first).	8	△ *1	○	○	○	○	○
F278 P278	**Sort (double word data (32-bit))**	**DSORT PDSORT**	S1, S2, S3	The double word data with sign from the area specified by “S1” to “S2” are sorted in ascending order (the smallest word is first) or descending order (the largest word is first).	8	△ *1	○	○	○	○	○
F282 P282	**Scaling of 16-bit data**	**SCAL PSCAL**	S1, S2, D	The output value Y is found for the input value X by performing scaling for the given data table.	8	△ *1	○	○	○	○	○
F283 P283	**Scaling of 32-bit data**	**DSCAL PDSCAL**	S1, S2, D	The output value Y is found for the input value X by performing scaling for the given data table.	10	×	○	○	○	○	○
F284 P284	**Inclination output of 16-bit data**	**RAMP**	S1, S2, S3, D	Executes the linear output for the specified time from the specified initial value to the target value.	10	×	○	△ *2	△ *2	×	×
Integer type non-linear function instructions											
F285 P285	**Upper and lower limit control (16-bit data)**	**LIMT PLIMT**	S1, S2, S3, D	When S1>S3, S1→D When S1<S3, S2→D When S1<or = S3<or = S2, S3→D	10	△ *1	○	○	○	○	○

○: Available, ×: Not available, △: Not available partially

*1) This instruction is only available for FP-e Ver.1.2 or later.

*2) This instruction is only available for FP-X Ver.2.0 or later, and FPΣ Ver. 3.10 or later.

Ramco National www.PanasonicSensors.com 1-800-280-6933

Num-ber	Name	Boolean	Ope-rand	Description	Steps	FP0/FP-e	FP0R	FPΣ	FP-X	FP2	FP2SH/FP10SH
F286 P286	**Upper and lower limit control (32-bit data)**	**DLIMT PDLIMT**	S1, S2, S3, D	When (S1+1, S1)>(S3+1, S3), (S1+1, S1)→(D+1, D) When (S2+1, S2)<(S3+1, S3), (S2+1, S2)→(D+1, D) When (S1+1, S1)<or = (S3+1, S3)<or = (S2+1, S2), (S3+1, S3)→(D+1, D)	16	△ *1	○	○	○	○	○
F287 P287	**Deadband control (16-bit data)**	**BAND PBAND**	S1, S2, S3, D	When S1>S3, S3–S1→D When S2<S3, S3–S2→D When S1<or = S3<or = S2, 0→D	10	△ *1	○	○	○	○	○
F288 P288	**Deadband control (32-bit data)**	**DBAND PDBAND**	S1, S2, S3, D	When (S1+1, S1)>(S3+1, S3), (S3+1, S3)–(S1+1, S1)→(D+1, D) When (S2+1, S2)<(S3+1, S3), (S3+1, S3)–(S2+1, S2)→(D+1, D) When (S1+1, S1)<or = (S3+1, S3)<or = (S2+1, S2),0→(D+1, D)	16	△ *1	○	○	○	○	○
F289 P289	**Zone control (16-bit data)**	**ZONE PZONE**	S1, S2, S3, D	When S3<0, S3+S1→D When S3=0, 0→D When S3>0, S3+S2→D	10	△ *1	○	○	○	○	○
F290 P290	**Zone control (32-bit data)**	**DZONE PDZONE**	S1, S2, S3, D	When (S3+1, S3)<0, (S3+1, S3)+(S1+1, S1)→(D+1, D) When (S3+1, S3)=0, 0→(D+1, D) When (S3+1, S3)>0, (S3+1, S3)+(S2+1, S2)→(D+1, D)	16	△ *1	○	○	○	○	○
BCD type real number operation instructions											
F300 P300	**BCD type sine operation**	**BSIN PBSIN**	S, D	SIN(S1+1, S1)→(D+1, D)	6	×	×	×	×	○	○
F301 P301	**BCD type cosine operation**	**BCOS PBCOS**	S, D	COS(S1+1, S1)→(D+1, D)	6	×	×	×	×	○	○
F302 P302	**BCD type tangent operation**	**BTAN PBTAN**	S, D	TAN(S1+1, S1)→(D+1, D)	6	×	×	×	×	○	○
F303 P303	**BCD type arcsine operation**	**BASIN PBASIN**	S, D	SIN^{-1}(S1+1, S1)→(D+1, D)	6	×	×	×	×	○	○
F304 P304	**BCD type arccosine operation**	**BACOS PBACOS**	S, D	COS^{-1}(S1+1, S1)→(D+1, D)	6	×	×	×	×	○	○
F305 P305	**BCD type arctangent operation**	**BATAN PBATAN**	S, D	TAN^{-1}(S1+1, S1)→(D+1, D)	6	×	×	×	×	○	○
Floating-point type real number operation instructions											
F309 P309	**Floating-point type data move**	**FMV PFMV**	S, D	(S+1, S)→(D+1, D)	8	△ *2	○	○	○	○	○
F310 P310	**Floating-point type data addition**	**F+ PF+**	S1, S2, D	(S1+1, S1)+(S2+1, S2)→(D+1, D)	14	△ *2	○	○	○	○	○
F311 P311	**Floating-point type data subtraction**	**F- PF-**	S1, S2, D	(S1+1, S1)–(S2+1, S2)→(D+1, D)	14	△ *2	○	○	○	○	○
F312 P312	**Floating-point type data multiplication**	**F* PF***	S1, S2, D	(S1+1, S1)×(S2+1, S2)→(D+1, D)	14	△ *2	○	○	○	○	○
F313 P313	**Floating-point type data division**	**F% PF%**	S1, S2, D	(S1+1, S1)÷(S2+1, S2)→(D+1, D)	14	△ *2	○	○	○	○	○

○: Available, ×: Not available, △: Not available partially

*1) This instruction is only available for FP-e Ver.1.2 or later.

*2) This instruction is available for FP-e Ver.1.21 or later, and FP0 V2.1 or later.

Ramco National www.PanasonicSensors.com 1-800-280-6933

Number	Name	Boolean	Operand	Description	Steps	FP0/FP-e	FP0R	FPΣ	FP-X	FP2	FP2SH/FP10SH
F314 P314	**Floating-point type data sine operation**	**SIN PSIN**	S, D	SIN(S+1, S)→(D+1, D)	10	△ *1	○	○	○	○	○
F315 P315	**Floating-point type data cosine operation**	**COS PCOS**	S, D	COS(S+1, S)→(D+1, D)	10	△ *1	○	○	○	○	○
F316 P316	**Floating-point type data tangent operation**	**TAN PTAN**	S, D	TAN(S+1, S)→(D+1, D)	10	△ *1	○	○	○	○	○
F317 P317	**Floating-point type data arcsine operation**	**ASIN PASIN**	S, D	SIN^{-1}(S+1, S)→(D+1, D)	10	△ *1	○	○	○	○	○
F318 P318	**Floating-point type data arccosine operation**	**ACOS PACOS**	S, D	COS^{-1}(S+1, S)→(D+1, D)	10	△ *1	○	○	○	○	○
F319 P319	**Floating-point type data arctangent operation**	**ATAN PATAN**	S, D	TAN^{-1}(S+1, S)→(D+1, D)	10	△ *1	○	○	○	○	○
F320 P320	**Floating-point type data natural logarithm**	**LN PLN**	S, D	LN(S+1, S)→(D+1, D)	10	△ *1	○	○	○	○	○
F321 P321	**Floating-point type data exponent**	**EXP PEXP**	S, D	EXP(S+1, S)→(D+1, D)	10	△ *1	○	○	○	○	○
F322 P322	**Floating-point type data logarithm**	**LOG PLOG**	S, D	LOG(S+1, S)→(D+1, D)	10	△ *1	○	○	○	○	○
F323 P323	**Floating-point type data power**	**PWR PPWR**	S1, S2, D	(S1+1, S1) ^ (S2+1, S2)→(D+1, D)	14	△ *1	○	○	○	○	○
F324 P324	**Floating-point type data square root**	**FSQR PFSQR**	S, D	$\sqrt{(S+1, S)}$→(D+1, D)	10	△ *1	○	○	○	○	○
F325 P325	**16-bit integer data to floating-point type data conversion**	**FLT PFLT**	S, D	Converts the 16-bit integer data with sign specified by “S” to real number data, and the converted data is stored in “D”.	6	△ *1	○	○	○	○	○
F326 P326	**32-bit integer data to floating-point type data conversion**	**DFLT PDFLT**	S, D	Converts the 32-bit integer data with sign specified by (S+1, S) to real number data, and the converted data is stored in (D+1, D).	8	△ *1	○	○	○	○	○
F327 P327	**Floating-point type data to 16-bit integer conversion (the largest integer not exceeding the floating-point type data)**	**INT PINT**	S, D	Converts real number data specified by (S+1, S) to the 16-bit integer data with sign (the largest integer not exceeding the floating-point data), and the converted data is stored in “D”.	8	△ *1	○	○	○	○	○
F328 P328	**Floating-point type data to 32-bit integer conversion (the largest integer not exceeding the floating-point type data)**	**DINT PDINT**	S, D	Converts real number data specified by (S+1, S) to the 32-bit integer data with sign (the largest integer not exceeding the floating-point data), and the converted data is stored in (D+1, D).	8	△ *1	○	○	○	○	○

○: Available, ×: Not available, △: Not available partially

*1) This instruction is available for FP-e Ver.1.21 or later, and FP0 V2.1 or later.

Ramco National www.PanasonicSensors.com 1-800-280-6933

Num-ber	Name	Boolean	Ope-rand	Description	Steps	FP0/FP-e	FP0R	FPΣ	FP-X	FP2	FP2SH/FP10SH
F329 P329	**Floating-point type data to 16-bit integer con-version (rounding the first decimal point down to integer)**	**FIX PFIX**	S, D	Converts real number data specified by (S+1, S) to the 16-bit integer data with sign (rounding the first decimal point down), and the converted data is stored in “D”.	8	△ *1	○	○	○	○	○
F330 P330	**Floating-point type data to 32-bit integer con-version (rounding the first decimal point down to integer)**	**DFIX PDFIX**	S, D	Converts real number data specified by (S+1, S) to the 32-bit integer data with sign (rounding the first decimal point down), and the converted data is stored in (D+1, D).	8	△ *1	○	○	○	○	○
F331 P331	**Floating-point type data to 16-bit integer con-version (rounding the first decimal point off to integer)**	**ROFF PROFF**	S, D	Converts real number data specified by (S+1, S) to the 16-bit integer data with sign (rounding the first decimal point off), and the converted data is stored in “D”.	8	△ *1	○	○	○	○	○
F332 P332	**Floating-point type data to 32-bit integer con-version (rounding the first decimal point off to integer)**	**DROFF PDROFF**	S, D	Converts real number data specified by (S+1, S) to the 32-bit integer data with sign (rounding the first decimal point off), and the converted data is stored in (D+1, D).	8	△ *1	○	○	○	○	○
F333 P333	**Floating-point type data round-ding the first decimal point down**	**FINT PFINT**	S, D	The decimal part of the real number data specified in (S+1, S) is rounded down, and the result is stored in (D+1, D).	8	△ *1	○	○	○	○	○
F334 P334	**Floating-point type data round-ding the first decimal point off**	**FRINT PFRINT**	S, D	The decimal part of the real number data stored in (S+1, S) is rounded off, and the result is stored in (D+1, D).	8	△ *1	○	○	○	○	○
F335 P335	**Floating-point type data sign changes**	**F+/- PF+/-**	S, D	The real number data stored in (S+1, S) is changed the sign, and the result is stored in (D+1, D).	8	△ *1	○	○	○	○	○
F336 P336	**Floating-point type data absolute**	**FABS PFABS**	S, D	Takes the absolute value of real number data specified by (S+1, S), and the result (absolute value) is stored in (D+1, D).	8	△ *1	○	○	○	○	○
F337 P337	**Floating-point type data degree → radian**	**RAD PRAD**	S, D	The data in degrees of an angle specified in (S+1, S) is converted to radians (real number data), and the result is stored in (D+1, D).	8	△ *1	○	○	○	○	○
F338 P338	**Floating-point type data radian → degree**	**DEG PDEG**	S, D	The angle data in radians (real number data) specified in (S+1, S) is converted to angle data in degrees, and the result is stored in (D+1, D).	8	△ *1	○	○	○	○	○
Floating-point type real number data processing instructions											
F345 P345	**Floating-point type data compare**	**FCMP PFCMP**	S1, S2	(S1+1, S1)>(S2+1, S2)→ R900A: on (S1+1, S1)=(S2+1, S2)→ R900B on (S1+1, S1)<(S2+1, S2)→ R900C: on	10	×	○	○	○	○	○
F346 P346	**Floating-point type data band compare**	**FWIN PFWIN**	S1, S2, S3	(S1+1, S1)>(S3+1, S3)→ R900A: on (S2+1, S2)<or =(S1+1, S1)<or =(S3+1, S3) → R900B on (S1+1, S1)<(S2+1, S2)→ R900C: on	14	×	○	○	○	○	○

○: Available, ×: Not available, △: Not available partially

*1) This instruction is available for FP-e Ver.1.21 or later, and FP0 V2.1 or later.

Ramco National www.PanasonicSensors.com 1-800-280-6933

Num-ber	Name	Boolean	Ope-rand	Description	Steps	FP0/FP-e	FP0R	FPΣ	FP-X	FP2	FP2SH/FP10SH
F347 P347	**Floating-point type data upper and lower limit control**	**FLIMT PFLIMT**	S1, S2, S3, D	When (S1+1, S1)>(S3+1, S3), (S1+1, S1) →(D+1, D) When (S2+1, S2)<(S3+1, S3), (S2+1, S2) → (D+1, D) When (S1+1, S1)<or = (S3+1, S3)<or =(S2+1, S2), (S3+1, S3)→(D+1, D)	17	×	○	○	○	○	○
F348 P348	**Floating-point type data dead-band control**	**FBAND PFBAND**	S1, S2, S3, D	When (S1+1, S1)>(S3+1, S3), (S3+1, S3)–(S1+1, S1)→(D+1, D) When (S2+1, S2)<(S3+1, S3), (S3+1, S3)–(S2+1, S2)→ (D+1, D) When (S1+1, S1)<or = (S3+1, S3)<or =(S2+1, S2), 0.0→(D+1, D)	17	×	○	○	○	○	○
F349 P349	**Floating-point type data zone control**	**FZONE PFZONE**	S1, S2, S3, D	When (S3+1, S3)<0.0, (S3+1, S3)+(S1+1, S1)→(D+1, D) When (S3+1, S3)=0.0, 0.0→ (D+1, D) When (S3+1, S3)>0.0, (S3+1, S3)+(S2+1, S2) →(D+1, D)	17	×	○	○	○	○	○
F350 P350	**Floating-point type data maxi-mum value**	**FMAX PFMAX**	S1, S2, D	Searches the maximum value in the real number data table between the area selected with “S1” and “S2”, and stores it in the (D+1, D). The address relative to “S1” is stored in (D+2).	8	×	×	×	×	○	○
F351 P351	**Floating-point type data mini-mum value**	**FMIN PFMIN**	S1, S2, D	Searches the minimum value in the real number data table between the area selected with “S1” and “S2”, and stores it in the (D+1, D). The address relative to “S1” is stored in (D+2).	8	×	×	×	×	○	○
F352 P352	**Floating-point type data total and mean values**	**FMEAN PFMEAN**	S1, S2, D	The total value and the mean value of the real number data from the area selected with “S1” to “S2” are obtained. The total value is stored in the (D+1, D) and the mean value is stored in the (D+3, D+2).	8	×	×	×	×	○	○
F353 P353	**Floating-point type data sort**	**FSORT PFSORT**	S1, S2, S3	The real number data from the area specified by “S1” to “S2” are stored in ascending order (the smallest word is first) or descending order (the largest word is first).	8	×	×	×	×	○	○
F354 P354	**Scaling of real number data**	**FSCAL PFSCAL**	S1, S2, D	Scaling (linearization) on a real number data table is performed, and the output (Y) to an input value (X) is calculated.	12	×	○	△ *1	△ *2	△ *3	△ *3

○: Available, ×: Not available, △: Not available partially

*1) This instruction is available for FPΣ 32k type.

*2) This instruction is available for FP-X Ver. 1.13 or later.

*3) This instruction is available for FP2/FP2SH Ver. 1.5 or later. FP10SH cannot be used.

Ramco National www.PanasonicSensors.com 1-800-280-6933

Num-ber	Name	Boolean	Ope-rand	Description	Steps	FP0/FP-e	FP0R	FPΣ	FP-X	FP2	FP2SH/FP10SH
Time series processing instruction											
F355	**PID processing**	**PID**	S	PID processing is performed depending on the control value (mode and parameter) specified by (S to S+2) and (S+4 to S+10), and the result is stored in the (S+3).	4	△ *1	○	○	○	○	○
F356	**Easy PID**	**EZPID**	S1, S2, S3, S4	Temperature control (PID) can be easily performed using the image of a temperature controller.	10	×	○	△ *2	△ *2	×	×
Compare instructions											
F373 P373	**16-bit data revision detection**	**DTR PDTR**	S, D	If the data in the 16-bit area specified by “S” has changed since the previous execution, internal relay R9009 (carry flag) will turn on. “D” is used to store the data of the previous execution.	6	×	○	○	○	○	○
F374 P374	**32-bit data revision detection**	**DDTR PDDTR**	S, D	If the data in the 32-bit area specified by (S+1, S) has changed since the previous execution, internal relay R9009 (carry flag) will turn on. (D+1, D) is used to store the data of the previous execution.	6	×	○	○	○	○	○
Index register bank processing instructions											
F410 P410	**Setting the index register bank number**	**SETB PSETB**	n	Index register (I0 to ID) bank number change over.	4	×	×	×	×	×	○
F411 P411	**Changing the index register bank number**	**CHGB PCHGB**	n	Index register (I0 to ID) bank number change over with remembering preceding bank number.	4	×	×	×	×	×	○
F412 P412	**Restoring the index register bank number**	**POPB PPOPB**	-	Changes index register (I0 to ID) bank number back to the bank before F411 (CHGB)/P411 (PCHGB) instruction.	2	×	×	×	×	×	○
File register bank processing instructions											
F414 P414	**Setting the file register bank number**	**SBFL PSBFL**	n	File register bank number change over.	4	×	×	×	×	×	△ *3
F415 P415	**Changing the file register bank number**	**CBFL PCBFL**	n	File register bank number change over with remembering preceding bank number.	4	×	×	×	×	×	△ *3
F416 P416	**Restoring the file register bank number**	**PBFL PPBFL**	-	Changes file register bank number back to the bank before F415 (CBFL)/P415 (PCBFL) instruction.	2	×	×	×	×	×	△ *3

○: Available, ×: Not available, △: Not available partially

*1) This instruction is available for FP0 (V2.1 or later) only.

*2) This instruction is available for FP-X V.1.20 or later, and FPΣ 32k type.

*3) This instruction is not available for FP10SH.

Ramco National www.PanasonicSensors.com 1-800-280-6933

17.4 Table of Error codes

■ Difference in ERROR display

There are differences in the way errors are displayed depending on the model.

Model	Display		Display method
FP1,FP-M,FP2,FP3,FP10SH	LED	ERROR.	Continually lit
FPΣ,FP0, FP0R, FP-X	LED	ERROR/ALARM	Flashes/continually lit
FP-e	Screen display	ERR.	Continually lit

■ Error Confirmation When ERROR Turns ON

When the “ERROR” on the control unit (CPU unit) turns on or flashes, a self-diagnostic error or syntax check error has occurred. Confirm the contents of the error and take the appropriate steps.

-Error Confirmation Method

Procedure:1.Use the programming tool software to call up the error code.
By executing the “STATUS DISPLAY”, the error code and content of error are displayed.
2.Check the error contents in the table of error codes using the error code ascertained above.

-Syntax check error

This is an error detected by the total check function when there is a syntax error or incorrect setting written in the program. When the mode selector is switched to the RUN mode, the total check function automatically activates and eliminates the possibility of incorrect operation from syntax errors in the program.

When a syntax check error is detected

-ERROR turns on or flashes.
-Operation will not begin even after switching to the RUN mode.
-Remote operation cannot be used to change to RUN mode.

Clearing a syntax check error

By changing to the PROG. mode, the error will clear and the ERROR will turn off.

Steps to take for syntax error

Change to the PROG. mode, and then execute the total check function while online mode with the programming tool connected. This will call up the content of error and the address where the error occurred.
Correct the program while referring to the content of error.

Ramco National www.PanasonicSensors.com 1-800-280-6933

-Self-diagnostic Error
This error occurs when the control unit (CPU unit) self-diagnostic function detects the occurrence of an abnormality in the system. The self-diagnostic function monitors the memory abnormal detection, I/O abnormal detection, and other devices.

When a self-diagnostic error occurs
- The ERROR turns on or flashes.
- The operation of the control unit (CPU unit) might stop depending on the content of error and the system register setting.
- The error codes will be stored in the special data register DT9000(DT90000).
- In the case of operation error, the error address will be stored in the DT9017(DT90017) and DT9018(DT90018).

Clearing the self-diagnostic error
At the “STATUS DISPLAY”, execute the “error clear”. Error codes 43 and higher can be cleared.
-You can use the initialize/test switch to clear an error. However, this will also clear the contents of operation memory.
-Errors can also be cleared by turning off and on the power while in the PROG. mode.
However, the contents of operation memory, not stored with the hold type data, will also be cleared.
-The error can also be cleared depending on the self-diagnostic error set instruction F148(ERR).

Steps to take for self-diagnostic error
The steps to be taken will differ depending on the error contents. For more details, use the error code obtained above and consult the table of self-diagnostic error codes.

■ MEWTOCOL-COM Transmission Errors
These are error codes from a PC or other computer device that occur during an abnormal response when communicating with a PLC using MEWTOCOL-COM.

Ramco National www.PanasonicSensors.com 1-800-280-6933

17.4.1 Table of Syntax Check Error

Error code	Name	Operation status	Description and steps to take	FP-e	FP0	FP0R	FP Σ	FP-X	FP2	FP2SH	FP10SH
E1	**Syntax error**	Stops	A program with a syntax error has been written. ⇒ Change to PROG. mode and correct the error.	A	A	A	A	A	A	A	A
E2 (Note)	**Duplicated output error**	Stops	Two or more OT(Out) instructions and KP(Keep) instructions are programmed using the same relay. Also occurs when using the same timer/counter number. ⇒ Change to PROG. mode and correct the program so that one relay is not used for two or more OT instructions. Or, set the duplicated output to “enable” in system register 20. A timer/counter instruction double definition error will be detected even if double output permission has been selected.	A	A	A	A	A	A	A	A
E3	**Not paired error**	Stops	For instructions which must be used in a pair such as jump (JP and LBL), one instruction is either missing or in an incorrect position. ⇒ Change to PROG. mode and enter the two instructions which must be used in a pair in the correct positions.	A	A	A	A	A	A	A	A
E4	**Parameter mismatch error**	Stops	An instruction has been written which does not agree with system register settings. For example, the number setting in a program does not agree with the timer/counter range setting. ⇒ Change to PROG. mode, check the system register settings, and change so that the settings and the instruction agree.	A	A	A	A	A	A	A	A
E5 (Note)	**Program area error**	Stops	An instruction which must be written in a specific area (main program area or subprogram area) has been written to a different area (for example, a subroutine SUB to RET is placed before an ED instruction). ⇒ Change to PROG. mode and enter the instruction into the correct area.	A	A	A	A	A	A	A	A

A: Available

Note) This error is also detected if you attempt to execute a rewrite containing a syntax error during RUN. In this case, nothing will be written to the CPU and operation will continue.

Ramco National www.PanasonicSensors.com 1-800-280-6933

Error code	Name	Opera-tion status	Description and steps to take	FP-e	FP0	FP0R	FP Σ	FP-X	FP2	FP2SH	FP10SH
E6	**Compile memory full error**	Stops	The program is too large to compile in the program memory. ⇒ Change to PROG. mode and reduce the total number of steps for the program. -FP10SH If memory expansion is possible, compilation will become possible when the memory is expanded.	A	A	A	A	A		A	A
E7	**High-level instruction type error**	Stops	In the program, high-level instructions, which execute in every scan and at the leading edge of the trigger, are programmed to be triggered by one contact. (e.g. F0 (MV) and P0 (PMV) are programmed using the same trigger continuously.) ⇒ Correct the program so that the high-level instructions executed in every scan and only at the leading edge are triggered separately.			A	A	A	A	A	A
E8	**High-level instruction operand combina-tion error**	Stops	There is an incorrect operand in an instruction which requires a specific combination of operands (for example, the operands must all be of a certain type). ⇒ Enter the correct combination of operands.	A	A	A	A	A	A	A	A
E9	**No program error**	Stops	Program may be damaged. ⇒Try to send the program again.							A	A
E10	**Rewrite during RUN syntax error**	Conti-nues	When inputting with the programming tool software, a deletion, addition or change of order of an instruction(ED, LBL, SUB, RET, INT, IRET, SSTP, and STPE) that cannot perform a rewrite during RUN is being attempted. Nothing is written to the CPU.						A	A	A

A: Available

Ramco National www.PanasonicSensors.com 1-800-280-6933

17.4.2 Table of Self-Diagnostic Error

Error code	Name	Opera-tion status	Description and steps to take	FP-e	FP0	FP0R	FP Σ	FP-X	FP2	FP2SH	FP10SH
E20	**CPU error**	Stops	Probably a hardware abnormality ⇒Please contact your dealer.						A	A	A
E21	**RAM error1**	Stops	Probably an abnormality in the internal RAM. ⇒Please contact your dealer.						A	A	A
E22	**RAM error2**										
E23	**RAM error3**										
E24	**RAM error4**										
E25	**RAM error5**										
E25	**Master memory model unmatch error**	Stops	The models of master memories are different. Use the master memories created with the same model.					A *1)			
E26	**User's ROM error**	Stops	FP-e,FP0,FP0R,FP Σ ,and FP1 C14,C16:Probably a hardware abnormality. ⇒ Please contact your dealer. FP-X: When the master memory cassette is mounted, the master memory cassette may be damaged. Remove the master memory, and check whether the ERROR turns off. When the ERROR turned off, rewrite the master memory as its contents are damaged, and use it again. When the ERROR does not turn off, please contact your dealer. FP1 C24,C40,C56,C72,and FP-M: Probably an abnormality in the memory unit ⇒Program the memory unit again and try to operate. If the same error is detected, try to operate with another memory unit. FP2,FP2SH,FP10SH,and FP3: There may be a problem with the installed ROM. -ROM is not installed. -ROM contents are damaged. -Program size stored on the ROM is larger than the capacity of the ROM ⇒Check the contents of the ROM	A	A	A	A	A	A	A	A
E27	**Unit installation error**	Stops	Units installed exceed the limitations.(i.e.,4 or more link units) ⇒ Turn off the power and re-configure units referring to the hardware manual.			A	A	A	A	A	A
E28	**System register error**	Stops	Probably an abnormality in the system register. ⇒ Check the system register setting or initialize the system registers.						A		

*1) This error occurs on FP-X Ver2.0 or later.

A: Available

Ramco National www.PanasonicSensors.com 1-800-280-6933

Error code	Name	Operation status	Description and steps to take	FP-e	FP0	FP0R	FP Σ	FP-X	FP2	FP2SH	FP10SH
E29	**Configuration parameter error**	Stops	A parameter error was detected in the MEWNET-W2 configuration area. Set a correct parameter.						A	A	
E30	**Interrupt error 0**	Stops	Probably a hardware abnormality. ⇒ Please contact your dealer.								
E31	**Interrupt error 1**	Stops	An interrupt occurred without an interrupt request . A hardware problem or error due to noise is possible. ⇒ Turn off the power and check the noise conditions.	A	A	A	A	A	A	A	A
E32	**Interrupt error 2**	Stops	There is no interrupt program for an interrupt which occurred. ⇒ Check the number of the interrupt program and change it to agree with the interrupt request..	A	A	A	A	A	A	A	A
E33	**Multi-CPU data unmatch error**	CPU2 Stops	This error occurs when a FP3/FP10SH is used as CPU2 for a multi-CPU system. ⇒Refer to “Multi-CPU system Manual”.							A	A
E34	**I/O status error**	Stops	An abnormal unit is installed. -FP Σ , FP0R(FP0R mode),FP-X, FP2,FP2SH and FP10SH: Check the contents of special data register DT90036 and locate the abnormal unit. Then turn off the power and replace the unit with a new one. -FP3: Check the contents of special data register DT9036 and locate the abnormal unit. Then turn off the power and replace the unit with a new one.			A	A	A		A	A
E35	**MEWNET-F slave illegal unit error**	Stops	A unit, which cannot be installed on the slave station of the MEWNET-F link system, is installed on the slave station. ⇒Remove the illegal unit from the slave station.						A	A	A
E36	**MEWNET-F (remote I/O) limitation error**	Stops	The number of slots or I/O points used for MEWNET-F(remote I/O) system exceeds the limitation. ⇒Re-configure the system so that the number of slots and I/O points is within the specified range.						A	A	A
E37	**MEWNET-F I/O mapping error**	Stops	I/O overlap or I/O setting that is over the range is detected in the allocated I/O and MEWNET-F I/O map. ⇒Re-configure the I/O map correctly						A	A	A

A: Available

Ramco National www.PanasonicSensors.com 1-800-280-6933

Error code	Name	Opera-tion status	Description and steps to take	FP-e	FP0	FP0R	FP Σ	FP-X	FP2	FP2SH	FP10SH
E38	**MEWNET-F slave I/O terminal mapping error**	Stops	I/O mapping for remote I/O terminal boards, remote I/O terminal units and I/O link is not correct. ⇒Re-configure the I/O map for slave stations according to the I/O points of the slave stations.						A	A	A
E39	**IC card read error**	Stops	When reading in the program from the IC memory card(due to automatic reading because of the dip switch setting or program switching due to F14(PGRD) instruction): - IC memory card is not installed. - There is no program file or it is damaged. - Writing is disabled. - There is an abnormality in the AUTOEXEC.SPG file. - Program size stored on the card is larger than the capacity of the CPU. ⇒Install an IC memory card that has the program properly recorded and execute the read once again.							A	A
E40	**I/O error**	Sele-ctable	Abnormal I/O unit. FPΣ, FP-X: Check the contents of special data register DT90002 and abnormal FPΣ expansion unit (application cassette for FP-X). Then check the unit. FP2 and FP2SH: Check the contents of special data registers DT90002,DT90003 and abnormal I/O unit. Then check the unit. Selection of operation status using system register21: -to continue operation, set 1 -to stop operation, set 0 Verification is possible in FPWIN GR/Pro at "I/O error" in the status display function.				A	A	A	A	A
			MEWNET-TR communication error FP3 and FP10SH: Check the contents of special data registers(FP3:DT9002,DT9003,FP10SH:DT90002,DT90003) and the erroneous master unit and abnormal I/O unit. Then check the unit. Selection of operation status using system register21: -to continue operation, set 1 -to stop operation, set 0 Verification is possible in FPWIN GR/Pro at "I/O error" in the status display function.								

A: Available

Ramco National www.PanasonicSensors.com 1-800-280-6933

Error code	Name	Opera-tion status	Description and steps to take	FP-e	FP0	FP0R	FP Σ	FP-X	FP2	FP2SH	FP10SH
E41	**Intelligent unit error**	Selec-table	An abnormality in an intelligent unit. FPΣ, FP-X: Check the contents of special data register "DT90006" and locate the abnormal FP intelligent unit (application cassette for FP-X). FP2,FP2SH,and FP10SH: Check the contents of special data registers DT90006,DT90007 and locate the abnormal intelligent unit. Then check the unit referring to its manual.. Selection of operation status using system register22: -to continue operation, set 1 -to stop operation, set 0 FP3: Check the contents of special data registers DT9006,DT9007 and locate the abnormal intelligent unit. Then check the unit referring to its manual.. Selection of operation status using system register22: -to continue operation, set 1 -to stop operation, set 0 Verification is possible in FPWIN GR/Pro at "I/O error" in the status display function.				A	A	A	A	A
E42	**I/O unit verify error**	Selec-table	I/O unit(Expansion unit) wiring condition has changed compared to that at time of power-up. ⇒ Check the contents of special data register (FP0: DT9010, FPΣ, FP-X: DT90010,DT90011) and locate the erroneous expansion unit. It checks whether an expansion connector is in agreement. ⇒ Check the contents of special data register (FP2,FP2SH,and FP10SH:DT90010,DT90011,FP3 DT9010,DT9011) Selection of operation status using system register23: -to continue operation, set 1 -to stop operation, set 0 Verification is possible in FPWIN GR/Pro at "I/O error" in the status display function.		A	A	A	A	A	A	A

A: Available

Ramco National www.PanasonicSensors.com 1-800-280-6933

Error code	Name	Opera-tion status	Description and steps to take	FP-e	FP0	FP0R	FP Σ	FP-X	FP2	FP2SH	FP10SH
E43	**System watching dog timer error**	Selec-table	Scan time required for program execution exceeds the setting of the system watching dog timer. ⇒ Check the program and modify it so that the program can execute a scan within the specified time. Selection of operation status using system register24: -to continue operation, set 1 -to stop operation, set 0							A	A
E44	**Slave station connecting time error for MEWNET-F system**	Selec-table	The time required for slave station connection exceeds the setting of the system register 35. Selection of operation status using system register25: -to continue operation, set 1 -to stop operation, set 0						A	A	A
E45	**Operation error**	Selec-table	Operation became impossible when a high-level instruction was executed. Selection of operation status using system register26: -to continue operation, set K1 -to stop operation, set K0 The address of operation error can be confirmed in either special data registers DT9017 and DT9018, or DT90017 and DT90018. (It varies according to the model to be used.) DT9017, DT9018: FP-e, FP0, FP0R(FP0 mode) DT90017, DT90018: FP∑, FP-X, FP0R(FP0R mode), FP2, FP2SH, FP10SH Verification is possible in FPWIN GR/Pro at "I/O error" in the status display function.	A	A	A	A	A	A	A	A

A: Available

Ramco National www.PanasonicSensors.com 1-800-280-6933

Error code	Name	Opera-tion status	Description and steps to take	FP-e	FP0	FP0R	FP Σ	FP-X	FP2	FP2SH	FP10SH
E46	**Remote I/O commu-nication error**	Selec-table	S-LINK error Occurs only in FP0-SL1 When one of the S-LINK errors (ERR1, 3 or 4) has been detected, error code E46 (remote I/O (S-LINK) communication error) is stored. Selection of operation status using system register27: -to continue operation, set K1 -to stop operation, set K0		A						
		Selec-table	MEWNET-F communication error A communication abnormally was caused by a transmission cable or during the power-down of a slave station. FP2, FP2SH, and FP10SH: Check the contents of special data registers DT90131 to DT90137 and locate the abnormal slave station and recover the communication condition. FP3: Check the contents of special data registers DT9131 to DT9137 and locate the abnormal slave station and recover the communication condition. Selection of operation status using system register27: -to continue operation, set K1 -to stop operation, set K0						A	A	A
E47	**MEW-NET-F attribute error**	Selec-table	In the unit on the slave station, an abnormality such as: -missing unit -abnormal intelligent unit was detected. FP2, FP2SH, and FP10SH: Check the contents of special data registers DT90131 to DT90137 and locate the abnormal slave station and recover the slave condition. FP3: Check the contents of special data registers DT9131 to DT9137 and locate the abnormal slave station and recover the slave condition. Selection of operation status using system register28: -to continue operation, set 1 -to stop operation, set 0						A	A	A
E49	**Expansion unit power supply sequence error**	Stops	The power supply for the expansion unit was turned on after the control unit. Turn on the power supply for the expansion unit at the same time or before the control unit is turned on.					A			
E50	**Backup battery error**	Conti-nues	The voltage of the backup battery lowered or the backup battery of control unit is not installed. ⇒ Check the installation of the backup battery and then replace battery if necessary. By setting the system register 4, you can disregard this self-diagnostic error.				A	A	A	A	A

Ramco National www.PanasonicSensors.com 1-800-280-6933

Error code	Name	Operation status	Description and steps to take	FP-e	FP0	FP0R	FP Σ	FP-X	FP2	FP2SH	FP10SH
E51	**MEWNET-F terminal station error**	Continues	Terminal station setting was not properly performed. Check stations at both ends of the communication path, and set them in the terminal station using the dip switches.						A	A	A
E52	**MEWNET-F I/O update synchronous error**	Continues	Set the INITIALIZE/TEST selecto1inmjvbgycfrde892 r to the INITIALIZE position while keeping the mode selector in the RUN position. If the same error occurs after this, please contact your dealer.						A	A	A
E53	**Multi-CPU I/O registration error (CPU2 only)**	Continues	Abnormality was detected when the multi-CPU system was used. Please contact your dealer.								A
E54	**IC memory card back-up battery error**	Continues	The voltage of the backup battery for the IC memory card lowered. The BATT.LED does not turn on. Charge or replace the backup battery of IC memory card.(The contents of the IC memory card cannot be guaranteed.)							A	A
E55	**IC memory card back-up battery error**	Continues	The voltage of the backup battery for IC memory card lowers. The BATT.LED does not turn on. Charge or replace the backup battery of IC memory card. (The contents of the IC memory card cannot be guaranteed.)							A	A
E56	**Incompatible IC memory card error**	Continues	The IC memory card installed is not compatible. Replace the IC memory card compatible with FP2SH/FP10SH.							A	A
E57	**No unit for the configuration**	Continues	MEWNET-W2/MCU The MEWNET-W2 link unit or MCU(Multi communication unit) is not installed in the slot specified using the configuration data. Either install a unit in the specified slot or change the parameter.						A	A	
E100 to E199	**Self-diagnostic error set by F148 (ERR)/P148 (PERR) instruction**	Stop	The error specified by the F148 (ERR)/P148(PERR) instruction is occurred. ⇒ Take steps to clear the error condition according to the specification you chose.	A	A	A	A	A	A		
E200 to E299		Continues		A	A	A	A	A	A		

A :Available

Ramco National www.PanasonicSensors.com 1-800-280-6933

17.4.3 Table of MEWTOCOL-COM Communication Error

Error code	Name	Description
!21	**NACK error**	Link system error
!22	**WACK error**	Link system error
!23	**Unit No. overlap**	Link system error
!24	**Transmission format error**	Link system error
!25	**Link unit hardware error**	Link system error
!26	**Unit No. setting error**	Link system error
!27	**No support error**	Link system error
!28	**No response error**	Link system error
!29	**Buffer closed error**	Link system error
!30	**Time-out error**	Link system error
!32	**Transmission impossible error**	Link system error
!33	**Communication stop**	Link system error
!36	**No destination error**	Link system error
!38	**Other communication error**	Link system error
!40	**BCC error**	A transfer error occurred in the received data.
!41	**Format error**	A command was received that does not fit the format.
!42	**No support error**	A command was received that is not supported.
!43	**Multiple frames procedure error**	A different command was received when processing multiple frames.
!50	**Link setting error**	A route number that does not exist was specified. Verify the route number by designating the transmission station.
!51	**Transmission time-out error**	Transmission to another device not possible because transmission buffer is congested.
!52	**Transmit disable error**	Transmission processing to another device is not possible.(Link unit runaway, etc.)
!53	**Busy error**	Command process cannot be received because of multiple frame processing. Or, cannot be received because command being processed is congested.
!60	**Parameter error**	Content of specified parameter does not exist or cannot be used.
!61	**Data error**	There was a mistake in the contact, data area, data number designation, size designation, range, or format designation.
!62	**Registration over error**	Operation was does when number of registrations was exceeded or when there was no registration.
!63	**PC mode error**	PC command that cannot be processed was executed during RUN mode.

Ramco National www.PanasonicSensors.com 1-800-280-6933

Error code	Name	Description
!64	**External memory error**	An abnormality occurred when loading RAM to ROM/IC memory card. There may be a problem with the ROM or IC memory card. -When loading, the specified contents exceeded the capacity. -Write error occurs. -ROM or IC memory card is not installed. -ROM or IC memory card does not conform to specifications -ROM or IC memory card board is not installed.
!65	**Protect error**	A program or system register write operation was executed when the protect mode (password setting or DIP switch, etc.)or ROM operation mode was being used.
!66	**Address error**	There was an error in the code format of the address data. Also. when exceeded or insufficient of address data, there was a mistake in the range designation.
!67	**No program error and No data error**	Cannot be read because there is no program in the program area or the memory contains an error. Or, reading was attempted of data that was not registered.
!68	**Rewrite during RUN error**	When inputting with programming tool software, editing of an instruction (ED, SUB, RET, INT, IRET, SSTP, and STPE) that cannot perform a rewrite during RUN is being attempted. Nothing is written to the CPU.
!70	**SIM over error**	Program area was exceeded during a program write process.
!71	**Exclusive access control error**	A command that cannot be processed was executed at the same time as a command being processed.

Ramco National www.PanasonicSensors.com 1-800-280-6933

17.5 MEWTOCOL-COM Communication Commands

Table of MEWTOCOL-COM commands

Command name	Code	Description
Read contact area	RC (RCS) (RCP) (RCC)	Reads the on and off status of contact. - Specifies only one point. - Specifies multiple contacts. - Specifies a range in word units.
Write contact area	WC (WCS) (WCP) (WCC)	Turns contacts on and off. - Specifies only one point. - Specifies multiple contacts. - Specifies a range in word units.
Read data area	RD	Reads the contents of a data area.
Write data area	WD	Writes data to a data area.
Read timer/counter set value area	RS	Reads the value set for a timer/counter.
Write timer/counter set value area	WS	Writes a timer/counter setting value.
Read timer/counter elapsed value area	RK	Reads the timer/counter elapsed value.
Write timer/counter elapsed value area	WK	Writes the timer/counter elapsed value.
Register or Reset contacts monitored	MC	Registers the contact to be monitored.
Register or Reset data monitored	MD	Registers the data to be monitored.
Monitoring start	MG	Monitors a registered contact or data using the code “MC or MD”.
Preset contact area (fill command)	SC	Embeds the area of a specified range in a 16-point on and off pattern.
Preset data area (fill command)	SD	Writes the same contents to the data area of a specified range.
Read system register	RR	Reads the contents of a system register.
Write system register	WR	Specifies the contents of a system register.
Read the status of PLC	RT	Reads the specifications of the programmable controller and error codes if an error occurs.
Remote control	RM	Switches the operation mode of the programmable controller.
Abort	AB	Aborts communication.

Ramco National www.PanasonicSensors.com 1-800-280-6933

17.6 Hexadecimal/Binary/BCD

Decimal	Hexadecimal	Binary data	BCD data (Binary Coded Decimal)
0	0000	00000000 00000000	0000 0000 0000 0000
1	0001	00000000 00000001	0000 0000 0000 0001
2	0002	00000000 00000010	0000 0000 0000 0010
3	0003	00000000 00000011	0000 0000 0000 0011
4	0004	00000000 00000100	0000 0000 0000 0100
5	0005	00000000 00000101	0000 0000 0000 0101
6	0006	00000000 00000110	0000 0000 0000 0110
7	0007	00000000 00000111	0000 0000 0000 0111
8	0008	00000000 00001000	0000 0000 0000 1000
9	0009	00000000 00001001	0000 0000 0000 1001
10	000A	00000000 00001010	0000 0000 0001 0000
11	000B	00000000 00001011	0000 0000 0001 0001
12	000C	00000000 00001100	0000 0000 0001 0010
13	000D	00000000 00001101	0000 0000 0001 0011
14	000E	00000000 00001110	0000 0000 0001 0100
15	000F	00000000 00001111	0000 0000 0001 0101
16	0010	00000000 00010000	0000 0000 0001 0110
17	0011	00000000 00010001	0000 0000 0001 0111
18	0012	00000000 00010010	0000 0000 0001 1000
19	0013	00000000 00010011	0000 0000 0001 1001
20	0014	00000000 00010100	0000 0000 0010 0000
21	0015	00000000 00010101	0000 0000 0010 0001
22	0016	00000000 00010110	0000 0000 0010 0010
23	0017	00000000 00010111	0000 0000 0010 0011
24	0018	00000000 00011000	0000 0000 0010 0100
25	0019	00000000 00011001	0000 0000 0010 0101
26	001A	00000000 00011010	0000 0000 0010 0110
27	001B	00000000 00011011	0000 0000 0010 0111
28	001C	00000000 00011100	0000 0000 0010 1000
29	001D	00000000 00011101	0000 0000 0010 1001
30	001E	00000000 00011110	0000 0000 0011 0000
31	001F	00000000 00011111	0000 0000 0011 0001
.	.	.	.
.	.	.	.
.	.	.	.
63	003F	00000000 00111111	0000 0000 0110 0011
.	.	.	.
.	.	.	.
.	.	.	.
255	00FF	00000000 11111111	0000 0010 0101 0101
.	.	.	.
.	.	.	.
.	.	.	.
9999	270F	00100111 00001111	1001 1001 1001 1001

Ramco National www.PanasonicSensors.com 1-800-280-6933

17.7 ASCII Codes

b7	b6	b5	b4	b3	b2	b1	b0	R \ C	0	1	2	3	4	5	6	7
				0	0	0	0	0	NUL	DEL	SPACE	0	@	P	`	p
				0	0	0	1	1	SOH	DC_1	!	1	A	Q	a	q
				0	0	1	0	2	STX	DC_2	"	2	B	R	b	r
				0	0	1	1	3	ETX	DC_3	#	3	C	S	c	s
				0	1	0	0	4	EOT	DC_4	$	4	D	T	d	t
				0	1	0	1	5	ENQ	NAK	%	5	E	U	e	u
				0	1	1	0	6	ACK	SYN	&	6	F	V	f	v
				0	1	1	1	7	BEL	ETB	'	7	G	W	g	w
				1	0	0	0	8	BS	CAN	(	8	H	X	h	x
				1	0	0	1	9	HT	EM	)	9	I	Y	i	y
				1	0	1	0	A	LF	SUB	*	:	J	Z	j	z
				1	0	1	1	B	VT	ESC	+	;	K	[	k	{
				1	1	0	0	C	FF	FS	,	<	L	¥	l	|
				1	1	0	1	D	CR	GS	-	=	M	]	m	}
				1	1	1	0	E	SO	RS	.	>	N	^	n	~
				1	1	1	1	F	SI	US	/	?	O	_	o	DEL

Ramco National www.PanasonicSensors.com 1-800-280-6933

17-92

Record of changes

Manual No.	Date	Desceiption of changes
ARCT1F409E	May.2005	First Edition
ARCT1F409E-1	Oct.2005	2nd Edition(PDF only) New product addition: AFPX-E30R,AFPX-TR6P,AFPX-EC30,AFPX-EC80
ARCT1F409E-2	Sept.2006	3rd Edition New product addition: FP-X Control Unit Transistor Type FP-X Expansion Unit Transistor Type
ARCT1F409E-3	Apr.2007	4th Edition New product addition FP-X communication cassette AFPX-COM5 FP-X communication cassette AFPX-COM6 FP-X Analog output cassette AFPX-DA2 FP-X Analog I/O cassette AFPX-A21 FP-X Thermocouple cassette AFPX-TC2 FP-X I/O cassette AFPX-IN4T3
ARCT1F409E-4	Jan.2008	5th Edition
ARCT1F409E-5	Oct.2008	6th Edition
ARCT1F409E-6	Dec.2008	7th Edition
ARCT1F409E-7	Feb.2009	8th Edition
ARCT1F409E-8	Feb.2010	9th Edition New product addition FP-X RTD cassette AFPX-RTD2
ARCT1F409E-9	Sept.2011	10th Edition Error correction, Change of corporate name
ARCT1F409E-10	Jul.2013	11th Edition Error correction, Change of corporate name

Please contact .....

Panasonic Industrial Devices SUNX Co., Ltd.

■ Overseas Sales Division (Head Office): 2431-1 Ushiyama-cho, Kasugai-shi, Aichi, 486-0901, Japan
■ Telephone: +81-568-33-7861 ■ Facsimile: +81-568-33-8591

panasonic.net/id/pidsx/global

About our sale network, please visit our website.

© Panasonic Industrial Devices SUNX Co., Ltd. 2013

July, 2013 PRINTED IN JAPAN

ARCT1F409E-10

Ramco National www.PanasonicSensors.com 1-800-280-6933